TAITO®

BATTLE GEAR 3™

BATTLE GEAR3

Instruction Manual

⚠ CAUTION

- The exclusive rights in and to this video game are owned by TAITO Corporation throughout the world. Therefore, such act as imitating this video game, or manufacturing, selling, leasing or exporting any similar video game, without permission from TAITO Corporation is subject to severe penalties. This video game is prohibited from being exported to USA and also prohibited from being sold or operated there.

- In order to use this product safely and properly, read this manual before use. Make sure you thoroughly understand the descriptions.

- After reading this manual, store it in a handy location for future reference.

TAITO CORPORATION

MAGICGATEは、ソニーが考案する著作権保護の仕組みを表す名称であり、各種メディア間の互換性を保証するものではありません。

MAGICGATEはソニー株式会社の商標です。

You are hereby notified that this product may fall within the scope of national export control legislation. You shall at all times comply fully with the requirements of such legislation and of all other applicable laws of any jurisdiction in relation to this product.

MAGICGATE is a copyrighted anti-copying technology created by Sony Corp. This MAGICGATE mark does not necessarily imply compatibility with other products bearing the “MAGICGATE” trademark.

MAGICGATE is a trademark of Sony Corporation.

Le présent document vous informe que ce produit peut être soumis à la législation de contrôle des exportations nationales. Vous êtes tenu(e) en permanence de vous conformer entièrement aux exigences d’une telle législation ainsi que de toute autre juridiction en relation avec ce produit.

MAGICGATE est une technique de protection de copyright créée par Sony Corporation. MAGICGATE ne veut pas nécessairement dire qu’il y a une compatibilité avec d’autres produits portant la marque commerciale “MAGICGATE”.

MAGICGATE est une marque commerciale de Sony Corporation.

MAGICGATE

Preface

Thank you for purchasing our "Battle Gear 3" game machine. It is intended to be installed in a game arcade shop.

Purpose and handling of the instruction manual

This manual includes handling methods and cautions for using the "Battle Gear 3" machine correctly.
Read it carefully and keep it in safe place so that it can be referenced by others anytime. If you should lose this manual,contact our dealers to obtain anew one.

Place to be contacted:

To request repairs and parts, contact the dealer you purchased your machine from.

Important safety information

In this manual, the following types of terms and conditions are used to alert you to safety issues. Before using the machine, make sure to read thoroughly and follow all of the precautions.

Persons discussed in the description of our arcade game machine.

- **Management staff**
  Employees who operate and maintain an amusement site or shop under th supervision of the owners of the game machine.

- **Arcade maintenancestaff**
  Employees who are experienced in maintaining arcade game machines, those whoregularly install, assemble and perform maintenance checks on games, and those who replace parts andconsumable items under supervision of the game owners or the shop managementstaff.

- **Engineer**
  People who work for arcade game machine manufacturers and are who are responsible for the design, inspection, and maintenance of arcade game machines, or those people who have a knowledge of electrical, electronic, and mechanical engineering that is equivalent to that of an engineering school graduate, and who regularly maintain and repair arcade game machines.

- **Player**
  People who play games at facilities and shops where arcade game machines are installed.

- **Onlookers**
  Onlookers at facilities and shops where arcade game machines are installed.

Descriptions of the safety symbols used in this manual

In this manual, the degrees of potential danger and property damage are classified by the use of the following labels and symbols.

⚠WARNING	**Indicates a situation that may lead to death or serious injury if not handled properly.**
⚠CAUTION	**Indicates a situation that may lead to personal injury or damage to the machine or other objects if not handled properly**
INPORTANT	**Contains notes that affect the working or operation of the machine. Informs of situations that may occur when working with this machine.**

Handling precautions

⚠WARNING

●Do not use the game machine if it is not working normally, such as when it emits odors or smoke.
emits odors or smoke. You may receive an electrical shock or cause a fire.
Turn OFF the power switch and pull the power plug out of the outlet. Contact the dealer where you purchased the machine or call our Service Department.

●Do not pull the power plug out with wet hands.
You may receive an electrical shock.

●Do not use a damaged power cord.
If you use a damaged cord you may receive an electrical shock or cause a fire.
・When handling the power cord, make sure to observe the following:
・Do not modify the power cord.
・Do not rest any object on top of the power cord.
・Do not bend or pull the cord hard.

●Do not connect multiple power cords to a single power outlet.
It may cause overheating which can lead to a fire.

●Be careful when handling the power plug.
Incorrect handling of the power plug may cause a fire.
Observe the following guidelines when handling the power cord.
・Do not plug in the power cord while anything is stuck to the plug.
・Insert the plug firmly and push it all the way in.

●If any foreign object or liquid gets inside the cabinet, do not continue
using the machine.
You may receive an electrical shock or cause a fire.
Turn OFF the power switch and pull the plug out of the outlet. Then contact the dealer where you purchased the machine or call our Technical Service Dept.

●Fire precaution
This game machine is not equipped with a fire or smoke detector. Be careful not to allow cigarettes or other sources of high heat to come in contact with the machine.

Location of the CAUTION decals

⚠WARNING

●Warning stickers are indicated clearly so that they can be read sufficiently.

Important precautions are described on warning stickers for safety. Observe the following points.

- Take care about illumination, dirt, damage, etc., so that warning stickers adhered to the machine can be read sufficiently. Also, take care so that warning stickers are not obscured by any housing, etc.
- If any warning sticker is especially dirty or damaged, replace it with a new one.

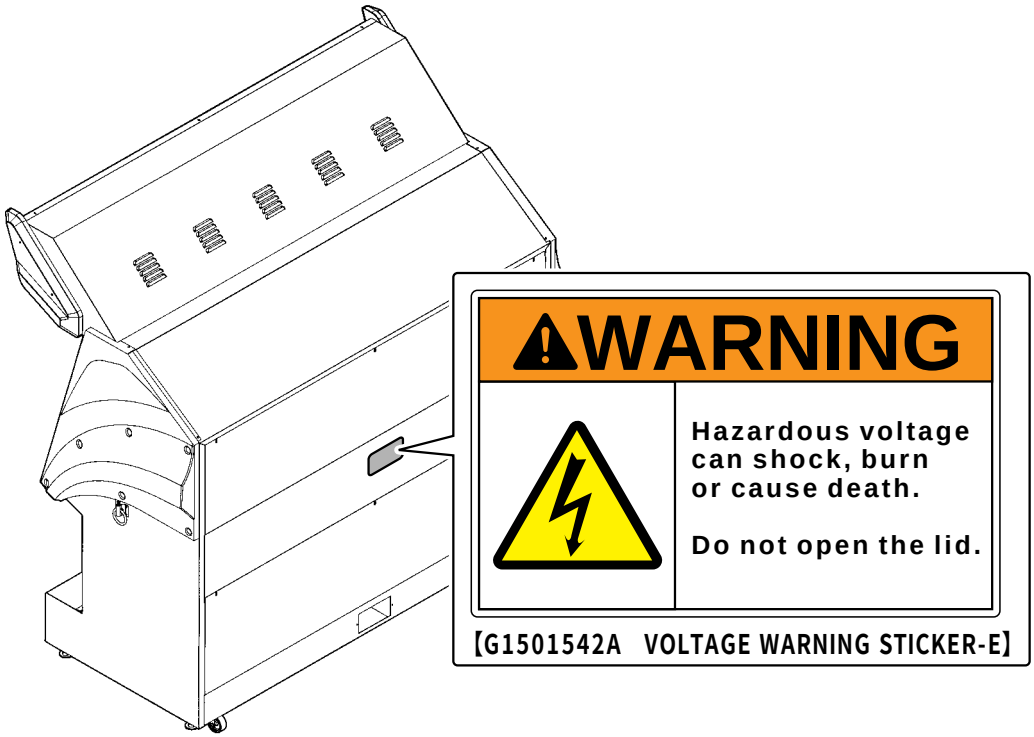

Table of contents

Preface ____ 1
- Purpose and handling of the instruction manual ... 1
- Place to be contacted ... 1

Important safety information ____ 2
- Persons discussed in the description of our arcade game machine. ... 2
- Descriptions of the safety symbols used in this manual ... 2
- Handling precaution ... 3
- Location of the CAUTION decals ... 4

Table of contents ____ 5

Product outline ____ 6
- Name of each part ... 6
- Product specifications ... 7
- Outside dimensions ... 7
- Accessory list ... 9
- Various Service Keys ... 10

Chapter 1:Moving the machine ____ 11
- 1-1.Moving cabinets（move on a floor） ... 11
- 1-2.Unloading using a forklift ... 13
- 1-3.Lift up and transfer the cabinet ... 14
- 1-4.How to load on a truck bed ... 15
- 1-5.Description for re-transport ... 17

Chapter 2:Installation ____ 18
- 2-1.Installation ... 18
- 2-2.Assembling ... 20
- 2-3.Assembling of the pop ... 23
- 2-4.Connection of power source ... 23
- 2-5.Wiring of the LAN cable ... 24

Chapter 3:Operation ____ 39
- 3-1.Operation check ... 39
- 3-2.Game details ... 44
- 3-3.Description for function ... 47
- 3-4.Test mode ... 48

Chapter 4:Maintenance ____ 58
- 4-1.Maintenance and check ... 58
- 4-2.Monitor adjustment ... 60
- 4-3.Parts replacement ... 62

Chapter 5:Discarding ____ 78
- 5-1.Precautions for machine discarding ... 78

Chapter 6:Troubleshooting ____ 79
- 6-1.Table of error indications ... 79
- 6-2.NESYS troubleshooting ... 80
- 6-3. Troubleshooting ... 81

Parts catalog ____ 83

Wiring ____ 157

Product outline

Name of each part

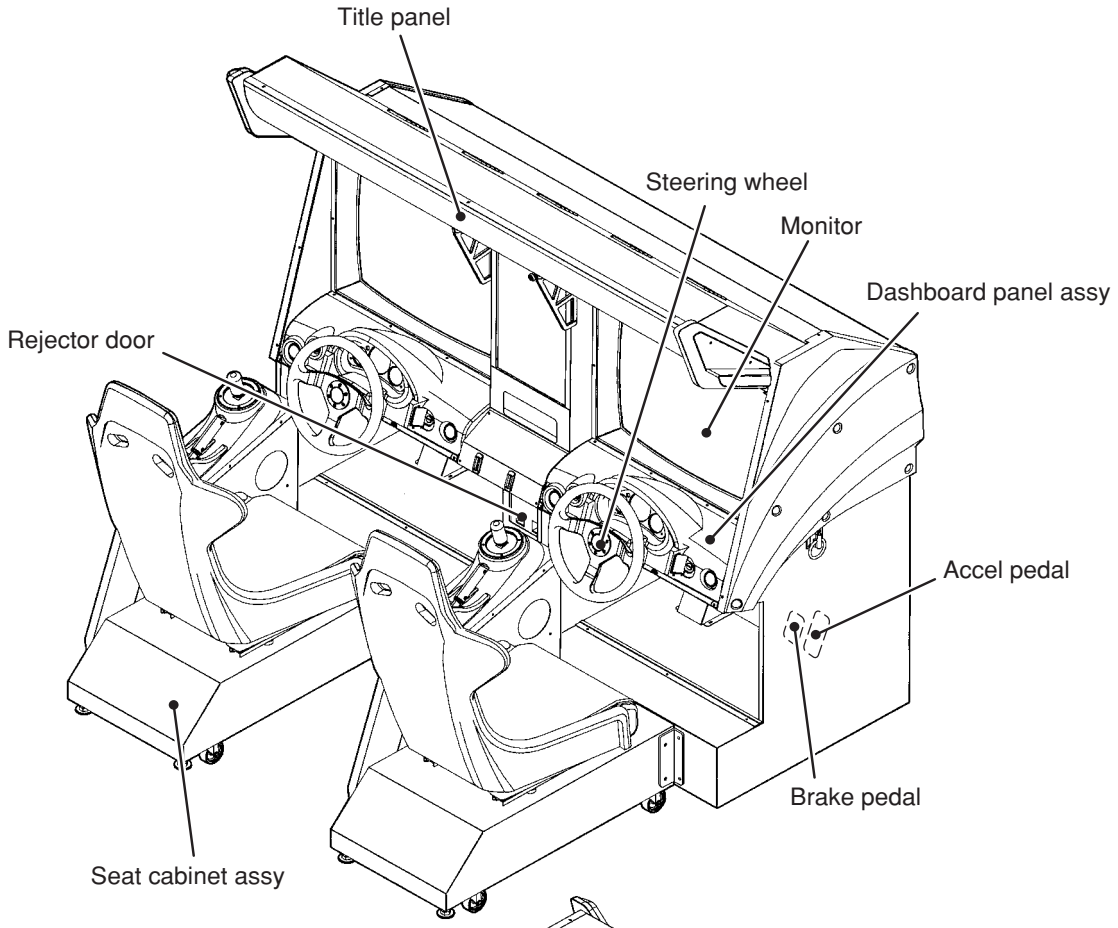

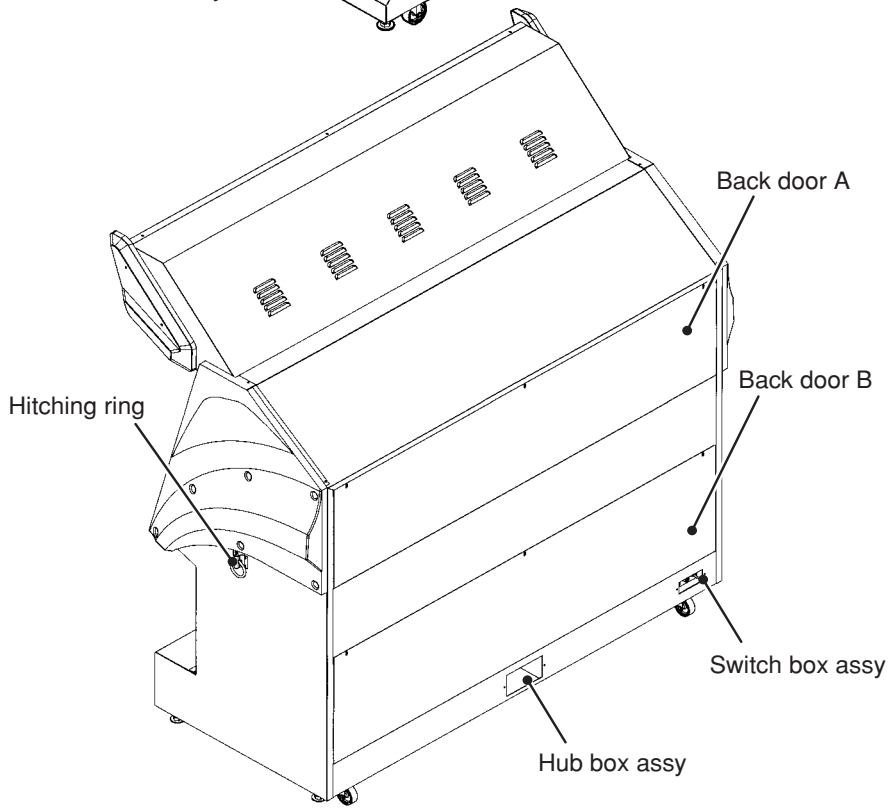

Product specifications

Item	Specification data
Outside dimension	1,820 (W) × 1,580(D) × 1,785 (H) mm
Total weight	Approx.417kg
Video cabinet assy	Approx.325kg
Seat cabinet assy	Approx.46kg
Power consumption	355W
Max. current value	6.6 A

Outside Dimensions

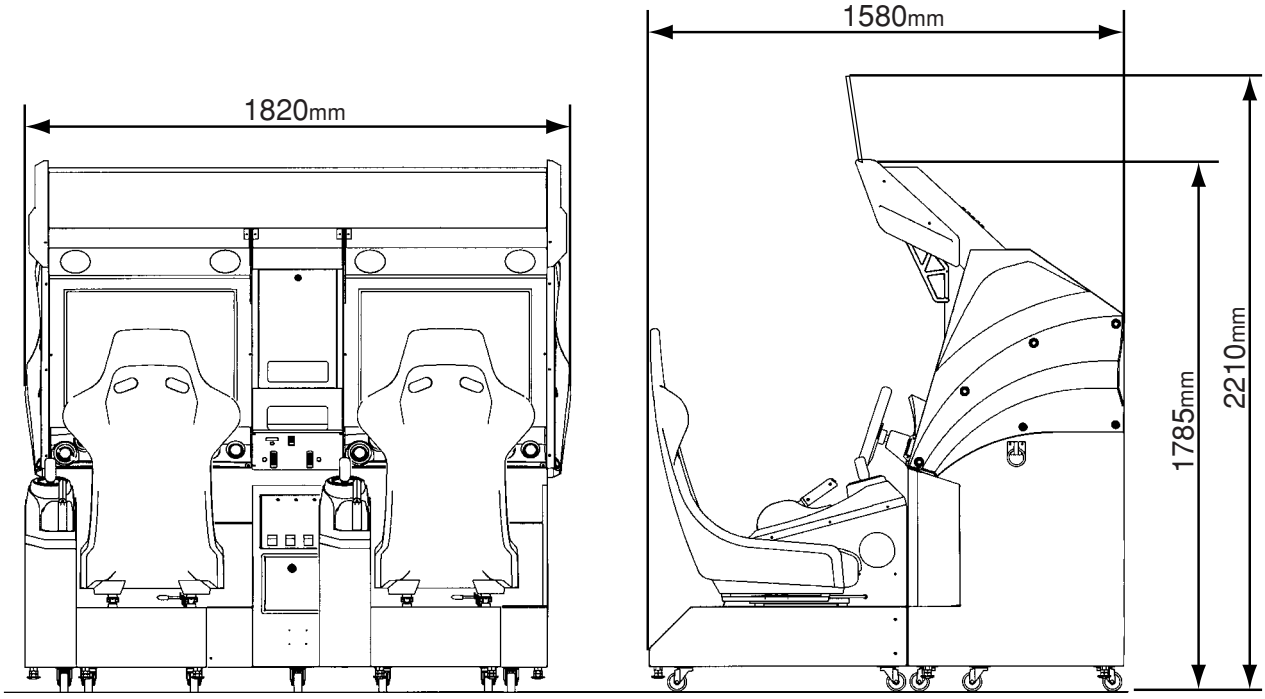

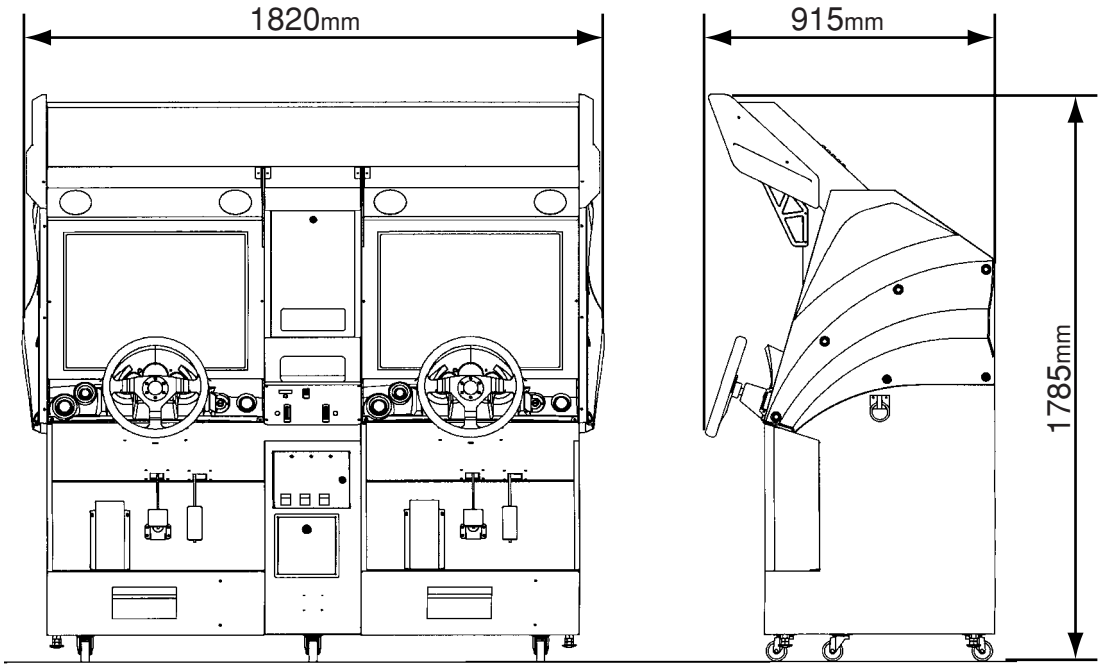
1820mm
915mm
1785mm

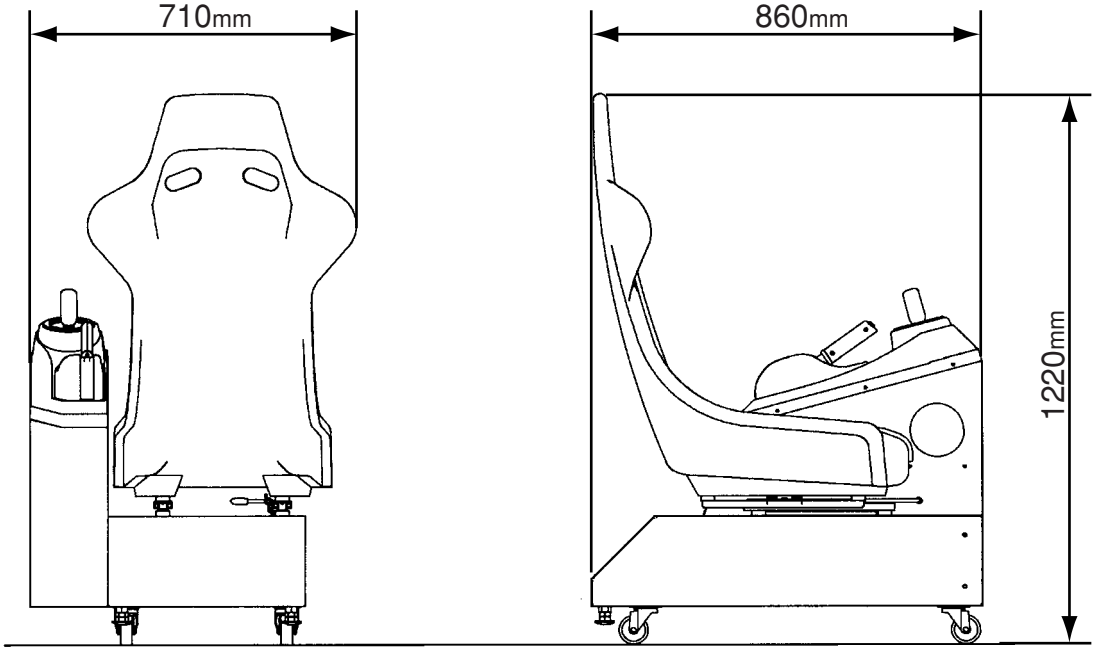
710mm
860mm
1220mm

Accessory List

Name[part No.]	Place packed	Q'ty
AC CORD AC 250V 10A 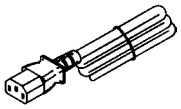		1
FUSE 8A 250V 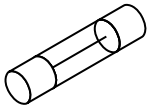		1
SMALL FUSE 5A 125V 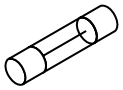		1
SEAT JOINT-A 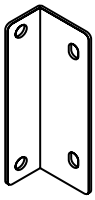		4
SEMUTH BOLT-W-M8x20 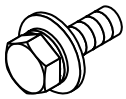		16
HUB-(10BASE-T 5PORT RJ45) 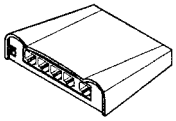 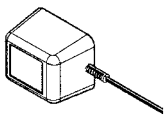		1

Name[Part No.]	Place packed	Q'ty
SERVICE INSTRUCTION 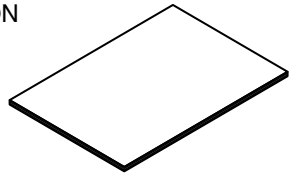		1

Various Service Keys

If any of the various service keys are lost, contact our Technical Service Dept.

■ **Service Key: LY-1153**

It is the key of a rejector door.

■ **Service Key: LY-1154**

It is the key of a vender door.

■ **Cash Key**

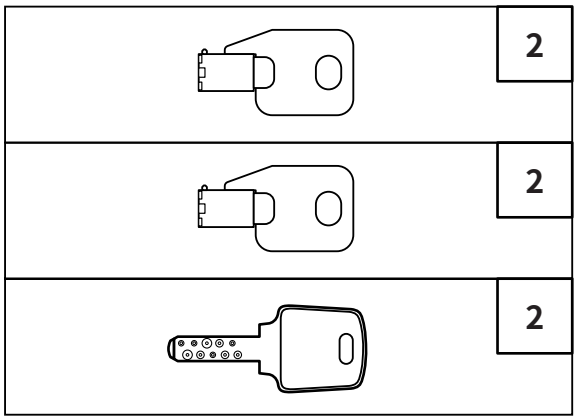

Chapter 1: Moving the machine

■ 1-1. Moving cabinets (move on a floor)

⚠CAUTION

- **Before moving cabinets, turn OFF the power switches and pull the power cords out from the cabinets.**
- **Before moving cabinets, raise all four adjusters as high as they will go.**
- **Before moving cabinets, make sure to separate the seat cabinet assembly from the video cabinet assembly.**
- **When moving the video cabinet, do not hold the handle.**

1 Turn OFF the power switch.

2 Pull the power plugs from a power outlet and remove the power cord from the cabinets.

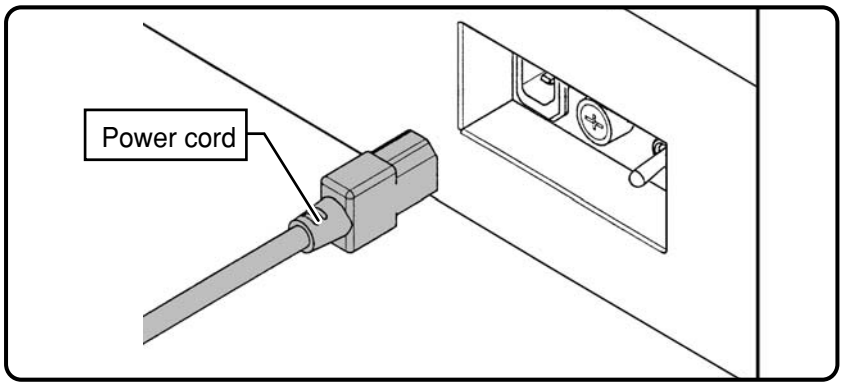

3 Disconnect the LAN cables from the hubs that connect to other cabinet or are connected from other cabinets.

4 Separate the seat cabinet assembly from the video cabinet assembly. Follow reverse procedures of 【Connecting seat cabinet assembly.】
[Connection of the seat cabinet -> See page 21]

5 Before moving the seat cabinet assembly and/or the video cabinet assembly, raise all the height adjusters (two for the seat cabinet assembly and four for the video cabinet assembly) as high as they will go using a crescent wrench or the like.

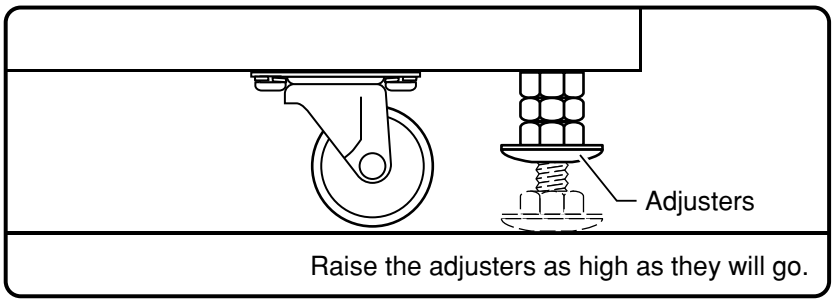

Raise the adjusters as high as they will go.

6 Hold the video cabinet assembly or the seat cabinet assembly and push or pull at normal walking speed.

■ 1-2. Unloading using a forklift

⚠CAUTION

- **Before moving, loading, or unloading the video cabinet assembly using a forklift, separate it from the seat cabinet.**
- **Before transferring the video cabinet assembly using a forklift, make sure to raise all of the height adjusters as high as they will go.**
- **Insert forklift forks from back of the assembly. Make sure to adjust distance between two forks so that the two forks align to sticker positions at its back.**
- **The seat cabinet assembly cannot be transported using a forklift.**

1 Separate the video cabinet assembly from the seat cabinet assembly referring to【1-1. Moving cabinets.】[Moving cabinets -> See page 11]

2 Raise the four adjusters of the video cabinet using a crescent wrench or the like.

3 Insert forklift forks from back of the video cabinet assembly. Adjust distance between the two forks so that they align to the sticker positions that are indicated as 【forklift insert here.】

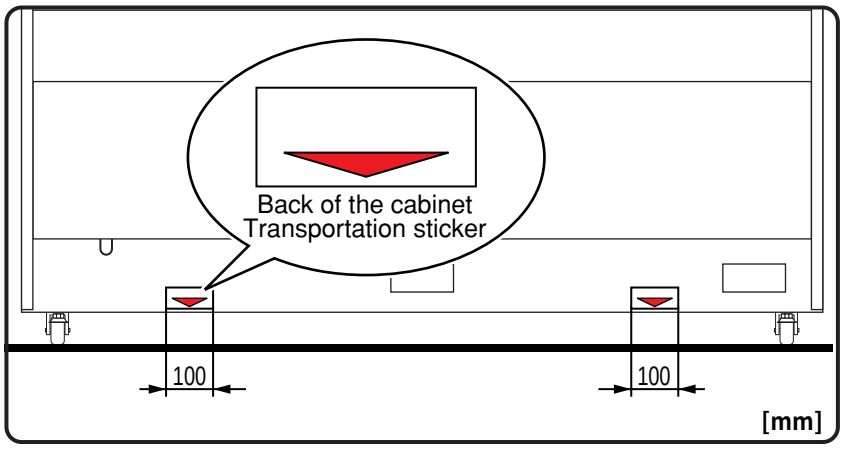

■ 1-3. Lift up and transfer the cabinet

⚠WARNING

●When lifting the video cabinet assembly (approximately 325 kg), arrange for enough workers to lift this weight. When lifting, never hold the control panel. It may break and cause an accident or injury.

●To transport the seat cabinet (approximately 46 kg), two or more people should hold the bottom of the seat cabinet.

■ Lifting the video cabinet assembly

If you cannot transport the cabinet using the casters beneath the video cabinet, hold the bottom face to lift it. When lifting, never hold the control panel, as it may break.

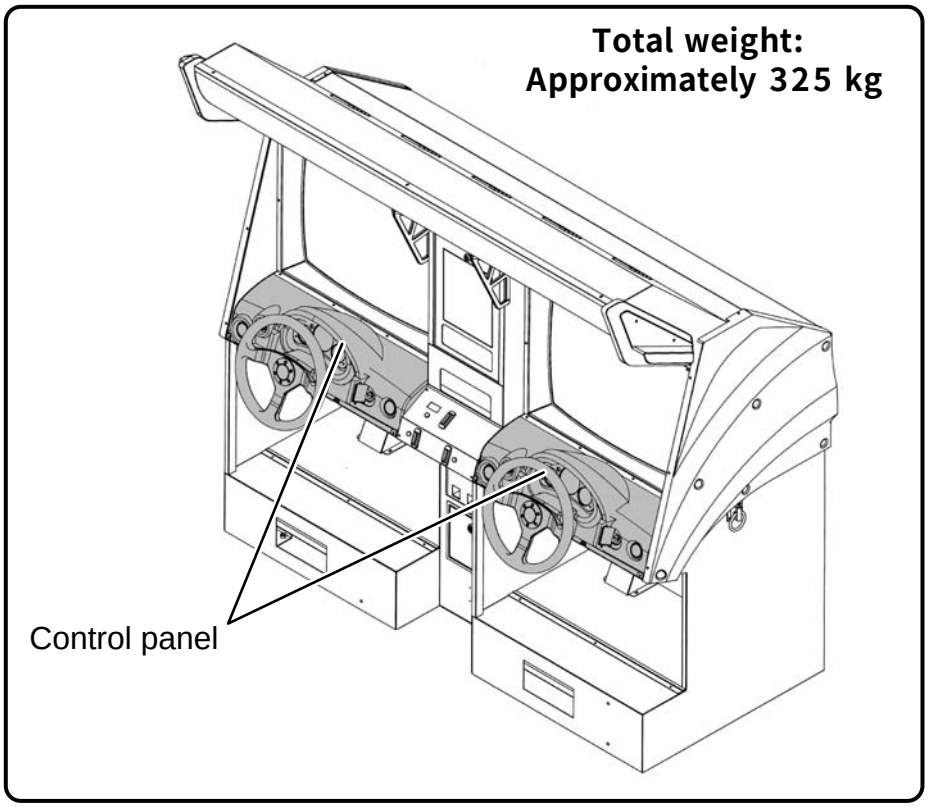

■ Lifting the seat cabinet assembly

If you cannot transport the cabinet using the casters beneath the seat cabinet, hold the bottom face to lift it with two or more persons. The total weight of the seat cabinet assembly is 46 kg.

■ 1-4. How to load on a truck bed

⚠CAUTION

- **On a truck bed, lower the height adjusters of each cabinet to secure them.**
- **Do not put ropes on positions not specified. Putting ropes without cushion material may damage the cabinets.**
- **Put a piece of cardboard or the like for positions where ropes may touch the cabinet.**

1. Prepare for re-transportation referring to the description for re-transportation.
[Re-transportation method -> See page 17]

2. Move the cabinets to a location next to a truck to transport.
[Move cabinet (on a floor) -> See page 11]

3. Load cabinets on a truck bed and lower all the height adjusters to secure them.

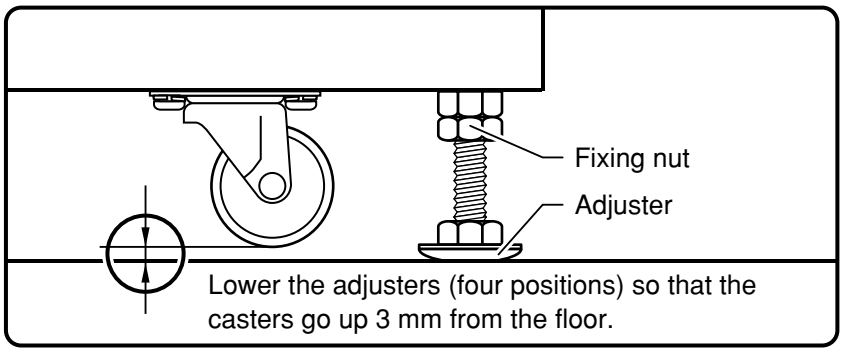

Lower the adjusters (four positions) so that the casters go up 3 mm from the floor.

4 When putting ropes on cabinets that are on a truck bed, use two hitching rings as shown in the figure below. When ropes may contact cabinet surfaces, put a soft materials between them such as cardboard.

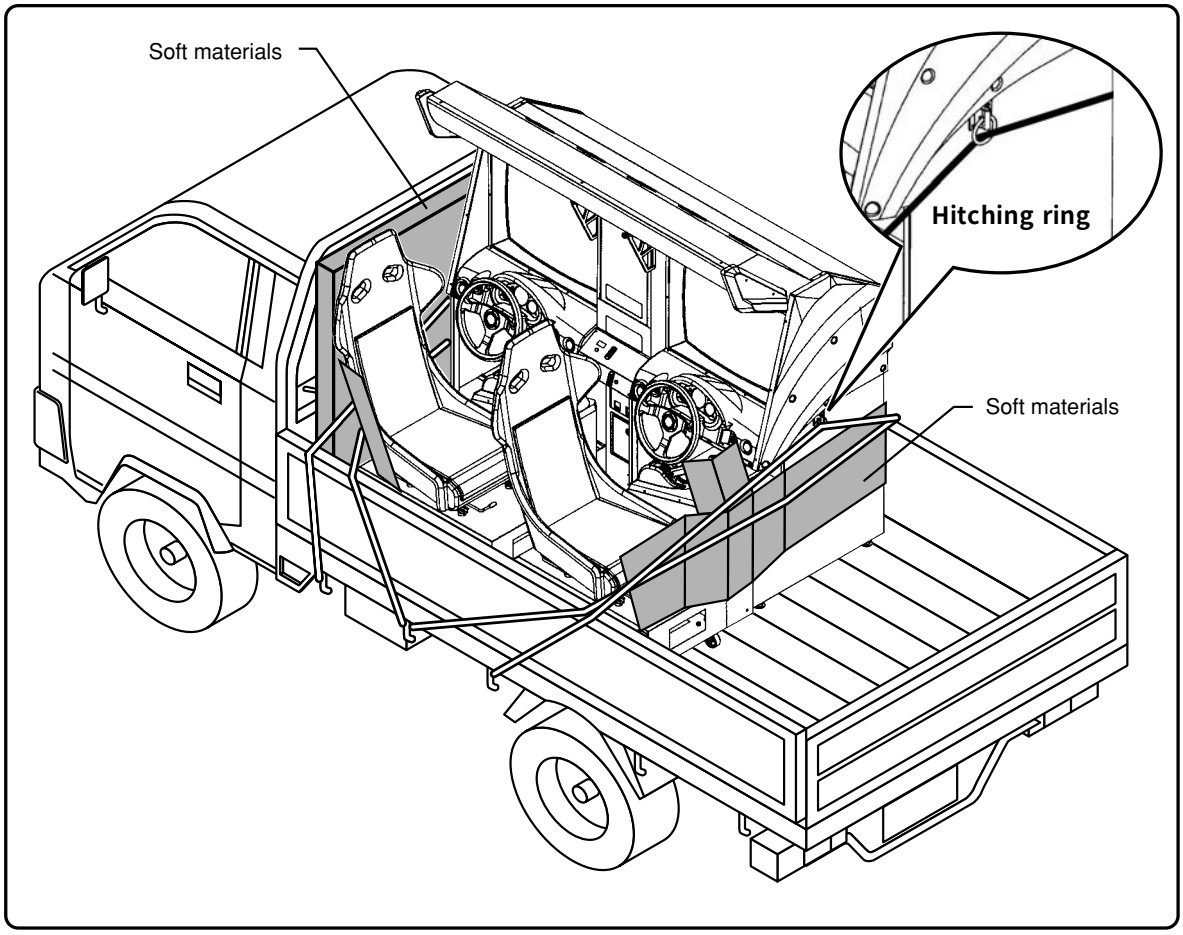

■ 1.5. Description for re-transport

⚠CAUTION

●Before re-transporting the machine, make sure to attach the accessories and instruction manuals.

1. When re-transporting the Battle Gear 3 machine, follow the steps below. Make sure to attach the accessories and instruction manuals.
2. Turn OFF the power switch of the cabinet and pull the power cord out.
3. Separate the seat cabinet assembly from the video cabinet assembly. Follow the reverse procedures of [Connecting the seat cabinet assembly.][Connecting the seat cabinet assembly -> See page 21.]
4. Return the instruction manuals and accessories to their original positions.
5. Check that all the locks are locked.
6. When moving any cabinet, make sure to raise all the height adjusters as high as they will go.

Chapter 2: Installation

■ 2-1. Installation

• Installation conditions

⚠WARNING

●Make sure to follow the installation conditions below.

- Install indoors only.
- Ambient temperature shall be 0 to 40ßC.
- Relative humidity shall be between 10 to 70 % and without dew.

• Locations the machine should not be installed

⚠WARNING

●Never install the machine outdoors or in the following locations.

- A hazardous location for fire prevention or in front of fire fighting equipment.
- A location where it is possible to have dew, due to rain drops, water leakage or high humidity.
- Near an indoor swimming pool or shower.
- A location where it is exposed to direct sunlight.
- A location where it is directly exposed to heat, such as near heating equipment or strong hot air blowing.
- Near highly flammable or volatile chemicals, or a hazardous object.
- On a tilted floor (more than 2ß angle)
- Where it will receive much vibration.
- In a very dusty location.
- In a location where marginal space cannot be secured.

• Installation marginal space

■ Installation of a single machine alone

Secure a riding space of 300 mm or more next to the right seat. The back of the cabinet has a power cord and LAN cable. Secure a space of 100 mm or more at the back.

■ Arrangement in parallel

Secure 140 mm or more between two cabinets and secure a riding space of 300 mm or more next to the rightmost seat. The back of the cabinet has a power cord and LAN cable. Secure 100 mm or more of space at the back.

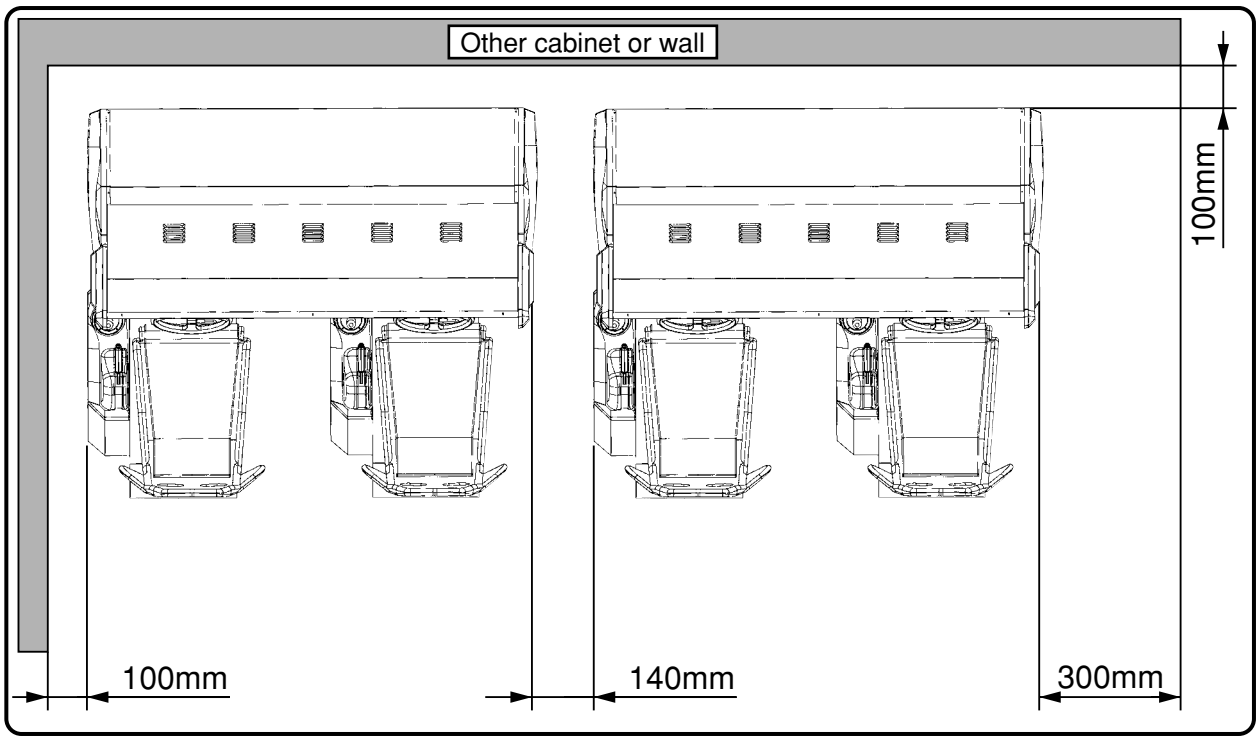

• Gate opening size to carry in the machine

At delivery, the machine is separated into components. To carry in all of the components, the following opening is required at the entrance.

●Video cabinet assembly	
Item	Specification
External dimensions	1,820 (side width) x 915 (depth) x 1,785 (height) mm
Total weight	Approximately 325 kg

●Seat cabinet assembly	
Item	Specification
External dimensions	710 (side width) x 860 (depth) x 1220 (height) mm
Total weight	Approximately 46 kg

■ 2-2. Assembling

■ Securing the video cabinet assembly

1 Transport the video cabinet assembly to a location to install.

2 Adjust the four height adjusters using a wrench, so that the casters appear 3 mm from the floor by visual check.

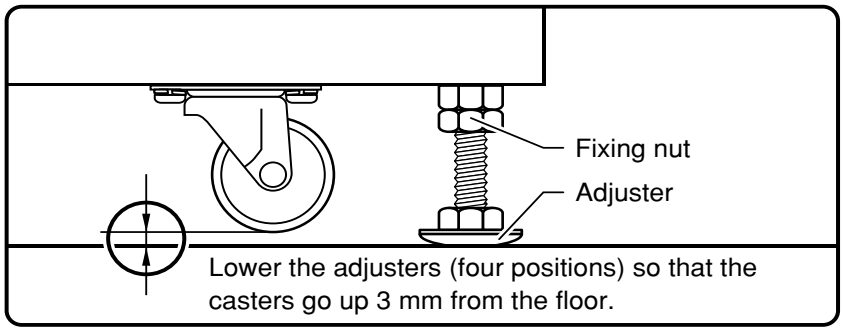

■ Connection of seat cabinet assembly

1 Affix the console sticker sheets that come with the machine at the position shown below. Affix this sheet to both seats. Prepare a solution of water and neutral detergent at a ratio of 9:1 and spray on your hands, the sticker and the positions to affix, spreading evenly by using spray equipment. Affix the sticker and remove air between the sticker and console body, using a spatula while adjusting its position.

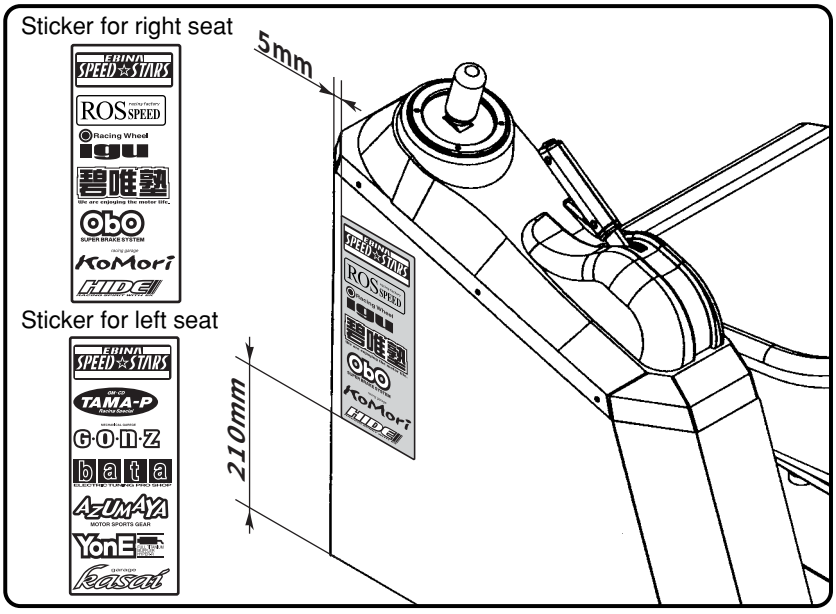

2 Bring the seat cabinet assembly close to the video cabinet assembly and connect the T connector.

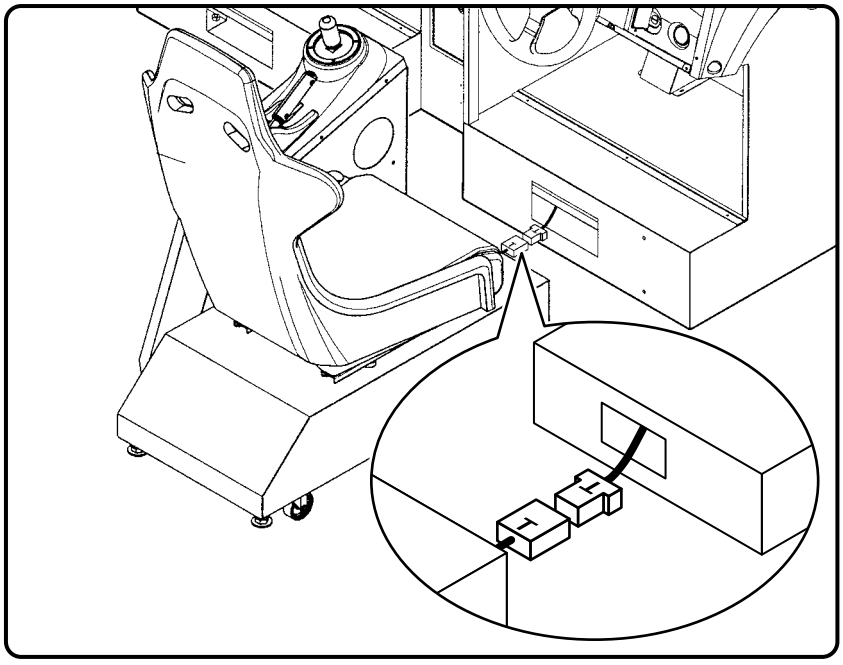

3 Secure the seat cabinet using two seat joints A.
8 (Semuth bolts (W): M8 x 20)

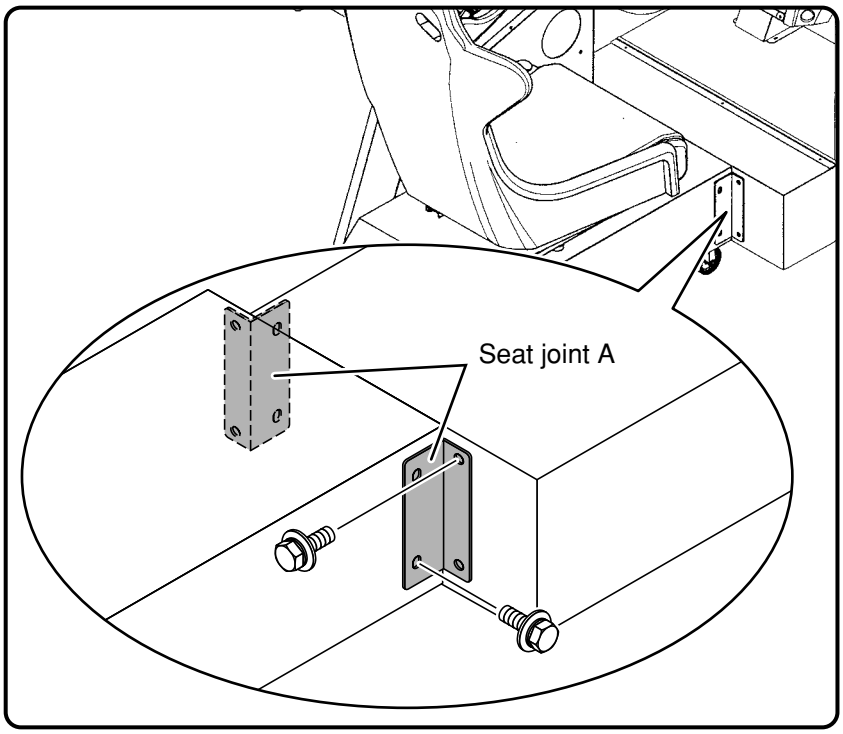

IMPORTANT

When connecting these cabinets, do not catch the harness between the seat cabinet assembly and video cabinet assembly.

4 Turn the two height adjusters of the seat cabinet using a wrench, so that the casters appear 3 mm or so from the floor by visual check.

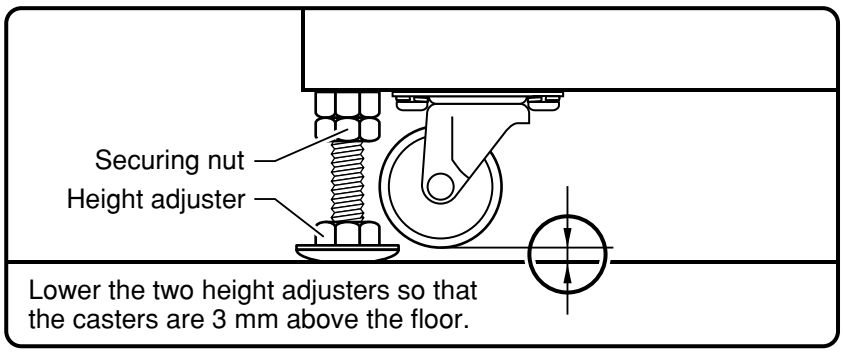

Lower the two height adjusters so that the casters are 3 mm above the floor.

5 Connect the other seat cabinet with the same procedures.

■ 2-3. Assembling of the pop

1 Assemble the pop that comes as an accessory of the machine.
Affix the pop on the video cabinet assembly.

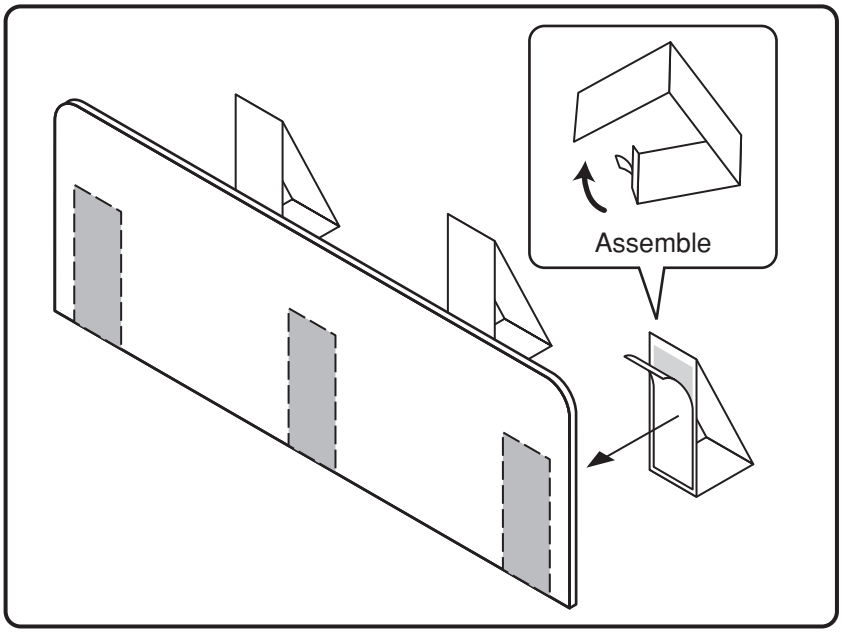

■ 2-4. Connection of power source

⚠ CAUTION

● **Do not let the power cord hang from the cabinet. Players or a member of the gallery may stumble on it.**

1 Take out the accessory power cord from the cash box.

2 Connect the power cord to the switch box that is at the back of the video cabinet.

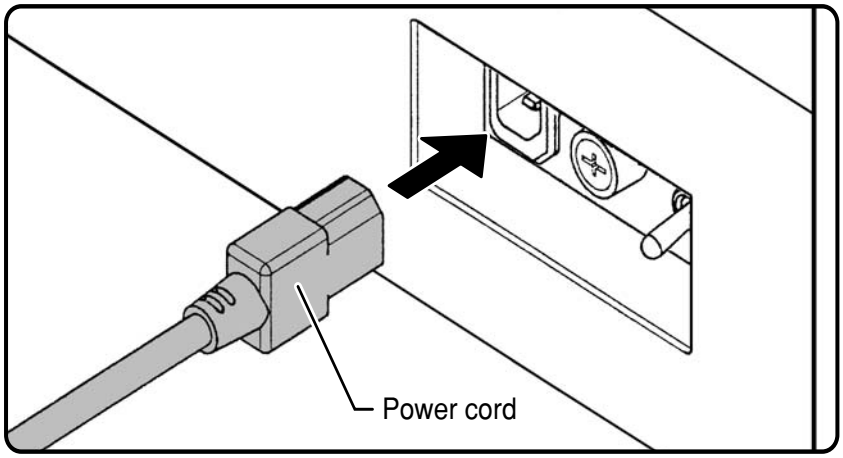

■ 2-5.Wiring of the LAN cable

Select a wiring method according to your installation condition.

To operate one machine only => See page 26.

Wiring method to operate only one machine using one HUB (accessory).

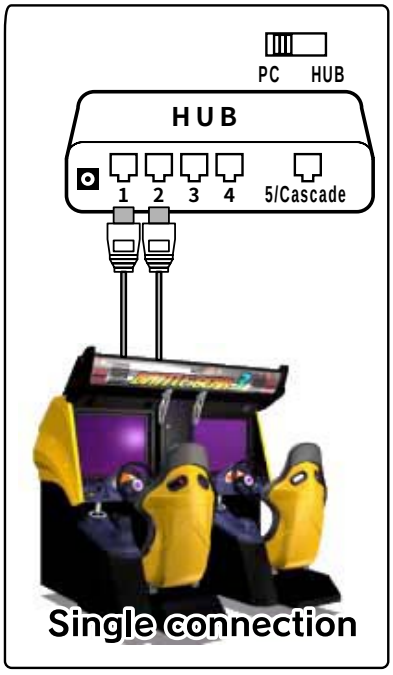

Managing two machines (1) => See page 29.

Wiring method to operate two machines using one HUB (accessory).

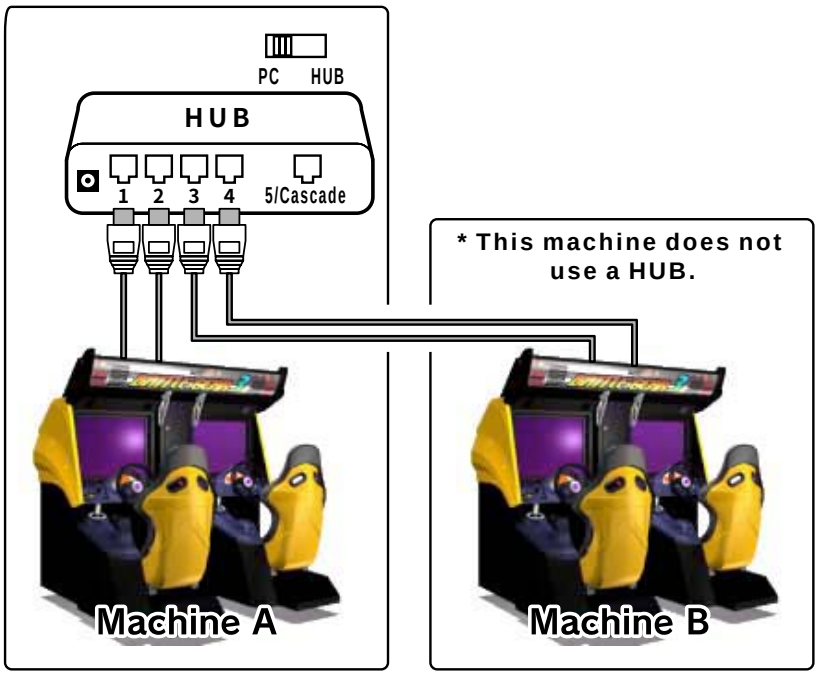

Operating two machines (2) (installing them separately, away from each other) => See page 33.

Wiring method to operate two machines using two HUBs (accessories). A wiring example in which the machines are installed far away each other. * A LAN cable (straight type) to connect the two machines shall be prepared by the user.

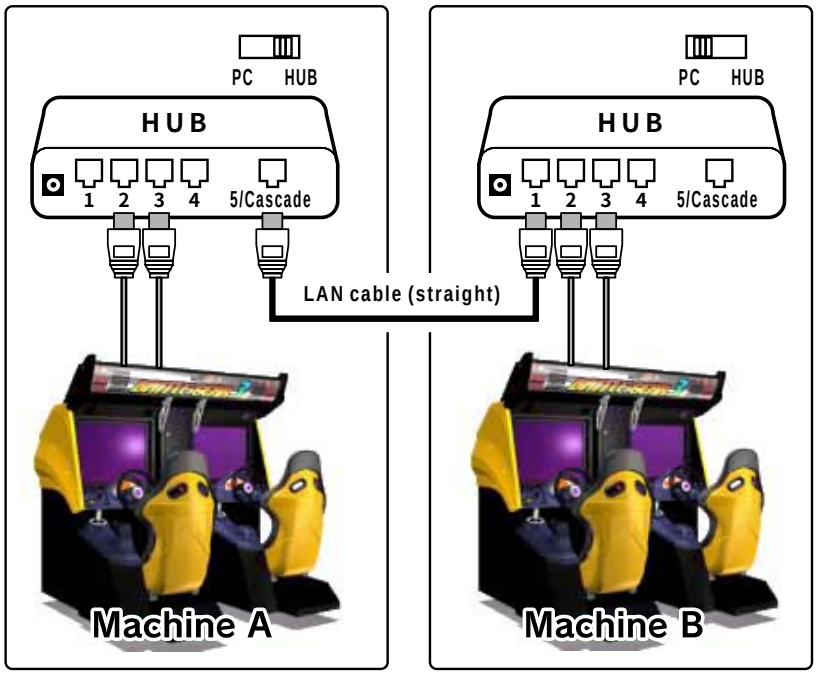

● Two machine simultaneous communication

In order for the two machines to communicate simultaneously, you must set the “LAN ID NUMBER” item in the configuration. Without this setting, simultaneous communication play (with up to four players) cannot take place.

■ LAN ID NUMBER

The LAN ID NUMBER (hereafter simply called the ID number) must be properly set for the communication play. Each of the ID numbers from 1 to 4 should be assigned to its own seat. For four player simultaneous play, **ID numbers 3 and 4 need to be assigned to two of the seats**. If the same number is assigned to two seats, communication play cannot take place. (ID numbers 1 and 2 have already been assigned to the seats on all machines when they are delivered.)

Wiring method for one machine operation

⚠ CAUTION

- **Do not let the LAN cable be out in a passageway. Players or a member of the gallery may stumble on it.**

1 Remove the rear door B. [Three Semuth screws (W): M5 x 12]

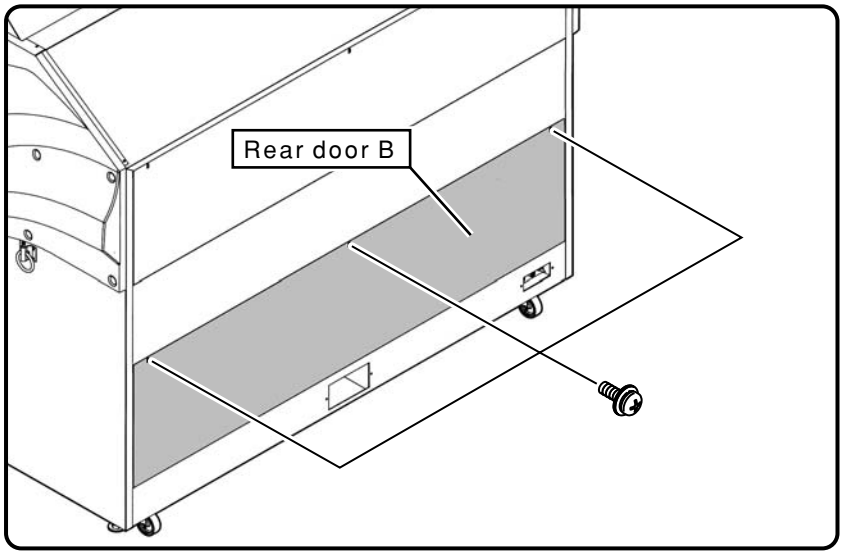

2 Take the HUB and AC adapter (accessories) out from a package.

3 Insert the AC adapter into the power outlet inside the HUB box.

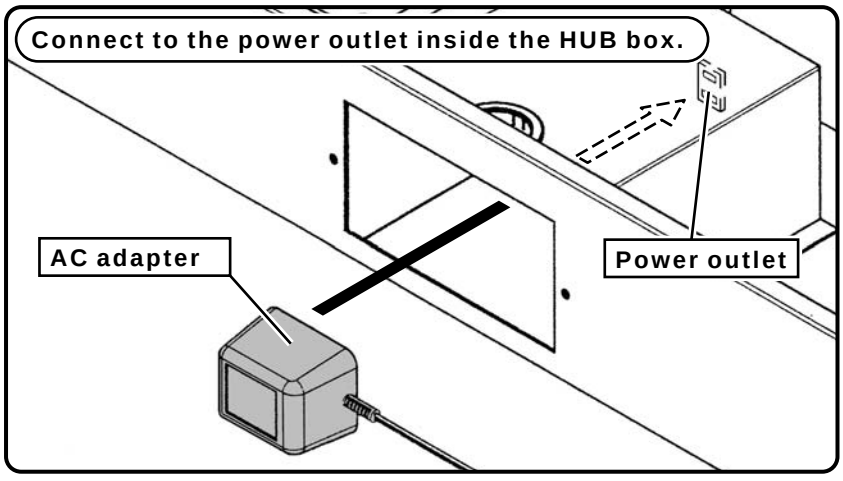

4 Insert the DC plug of the AC adapter to the DC jack.

5 Slide the HUB select switch to the [PC] position.

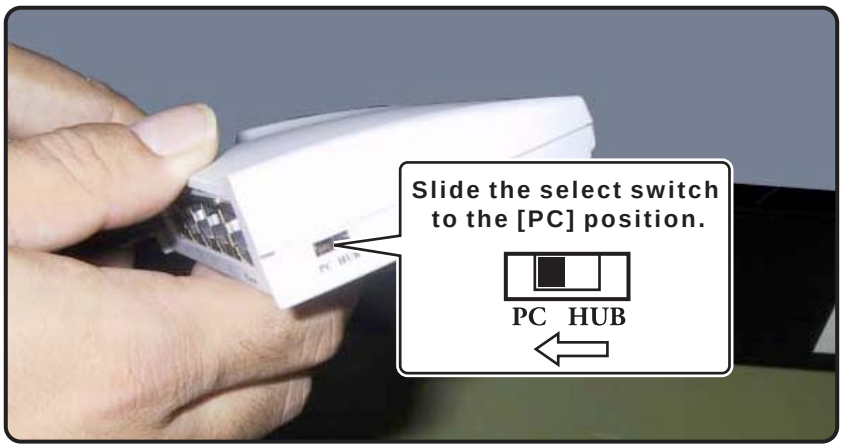

6 Put the two LAN cables in the cabinet through the hole on the HUB box and pull them out to the outside.

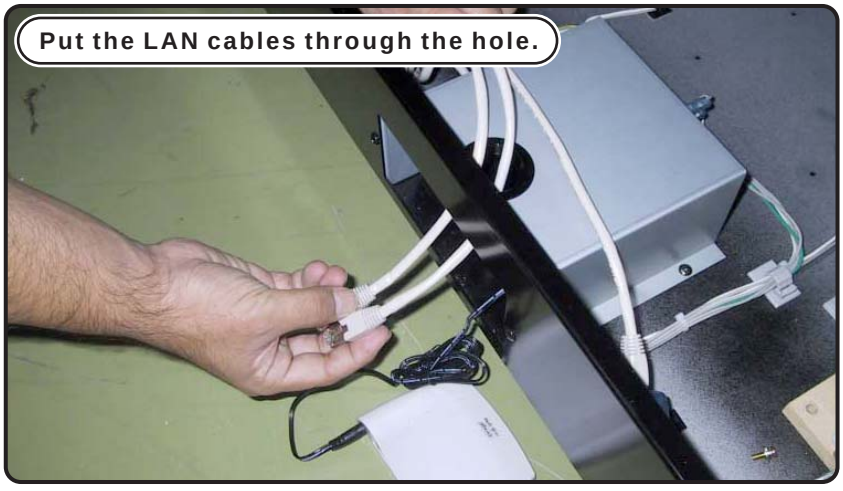

7 Connect these two cables to Port 1 and Port 2 on the HUB. Either of Port 1 or Port 2 is OK.

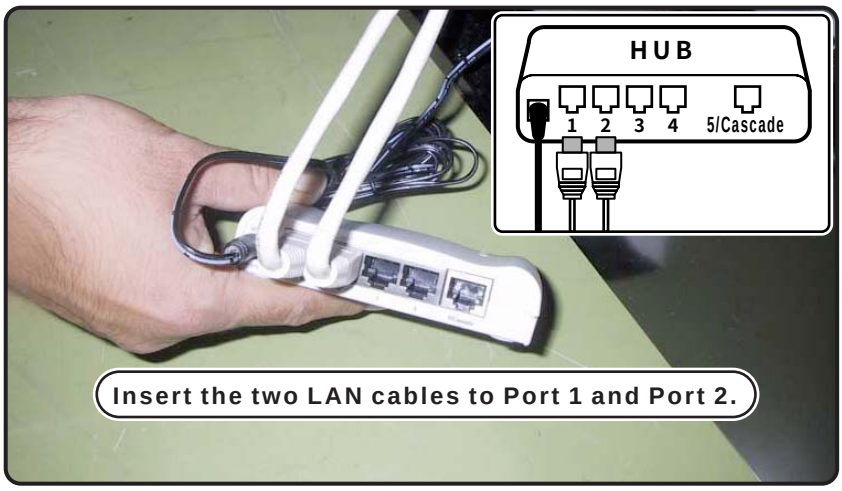

IMPORTANT Make sure the LAN cables are securely connected to the HUB.

8 Retract the HUB into the HUB box.

9 Install rear door B. [Three Semuth screws (W): M5 x 12.]

10 With this, the connection work is complete.

Wiring method of [Operation of two machines (1)]

⚠ CAUTION

- **Do not let the LAN cable be out in a passageway. Players or a member of the gallery may stumble on it.**

Work for the both machines

1 Remove rear door B. [Three Semuth screws (W): M5 x 12]

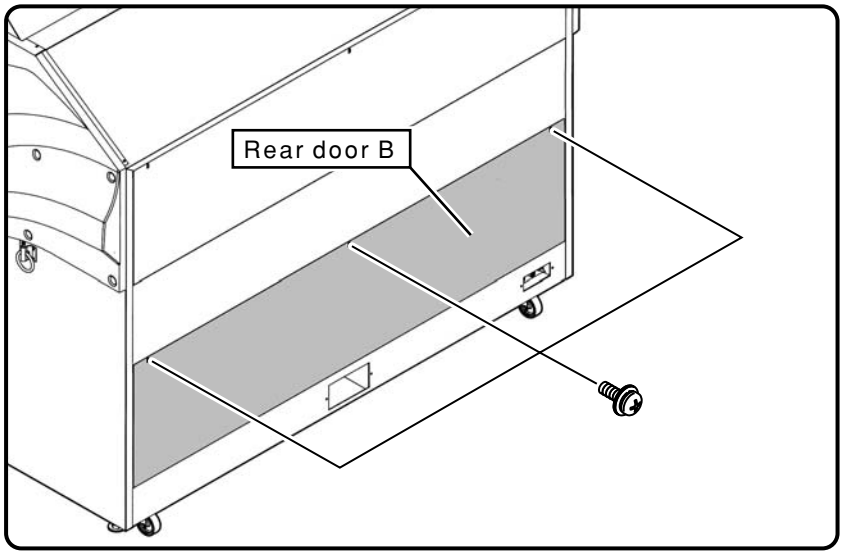

Work on machine A

2 Take the HUB and AC adapter (accessories) from a package.

Work on machine A

3 Insert the AC adapter to the power outlet inside the HUB box.

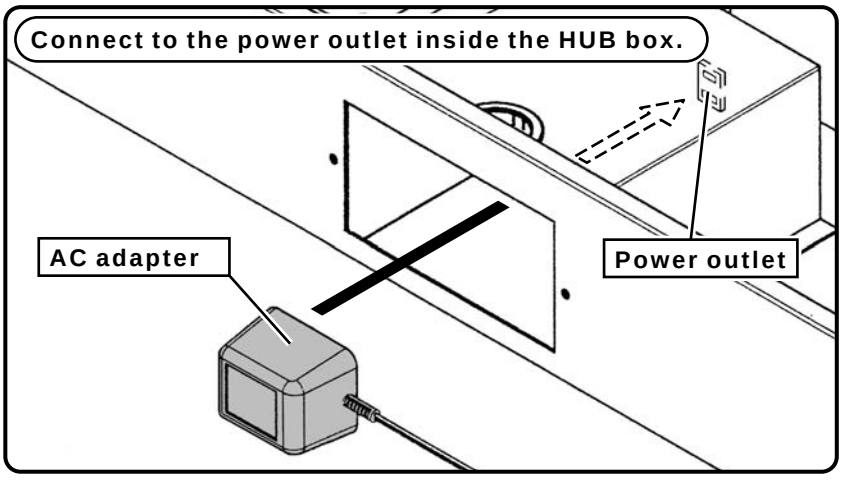

Work on machine A

4 Insert the DC plug of the AC adapter to the DC jack.

Work on machine A

5 Slide the HUB select switch to the [PC] position.

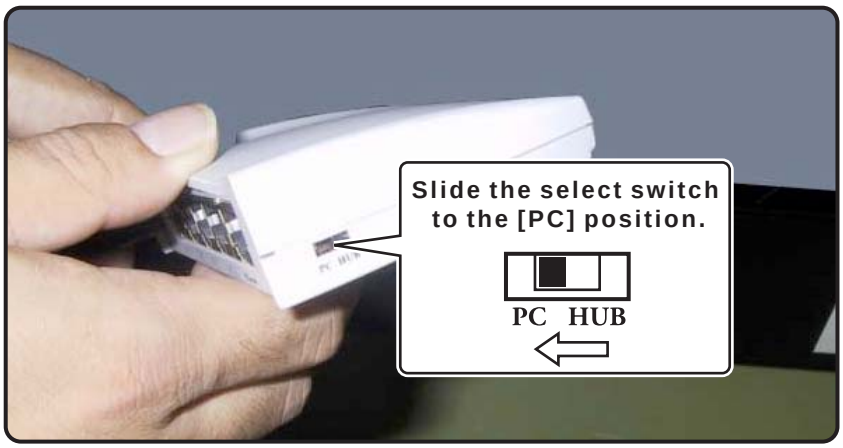

Work on machine A

6 Put the two LAN cables in the cabinet through the hole on the HUB box and pull them out.

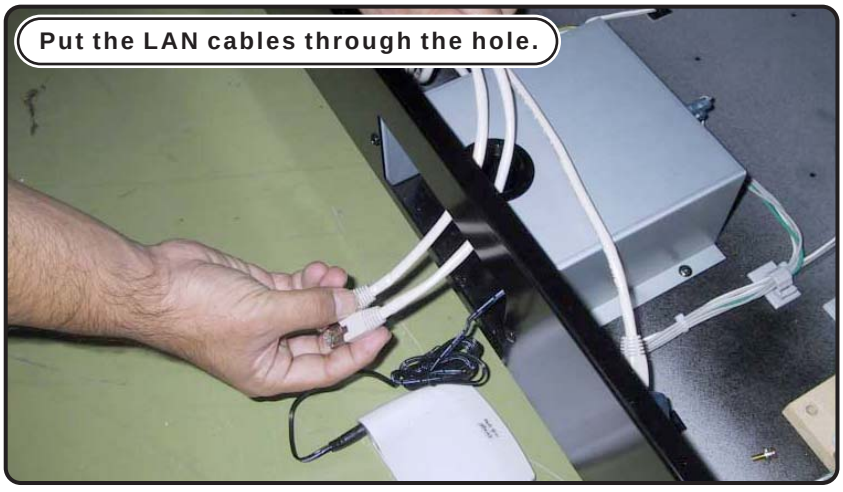

Work on machine A

7 Connect these two cables to Port 1 and Port 2 on the HUB. Either of Port 1 and Port 2 is OK.

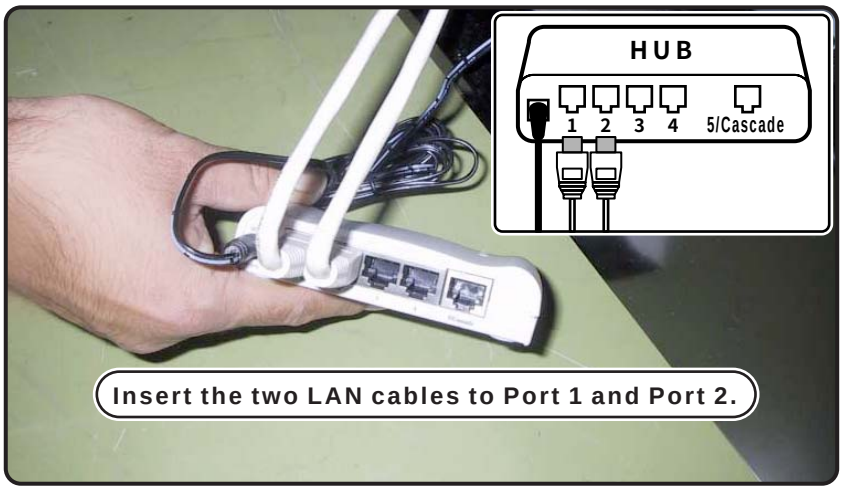

IMPORTANT

Make sure the LAN cables are securely connected to the HUB.

Work on machine B

8 Put the two LAN cables of machine B through the hole of the HUB box, and connect them to machine A. * Do not use the HUB that comes with machine B.

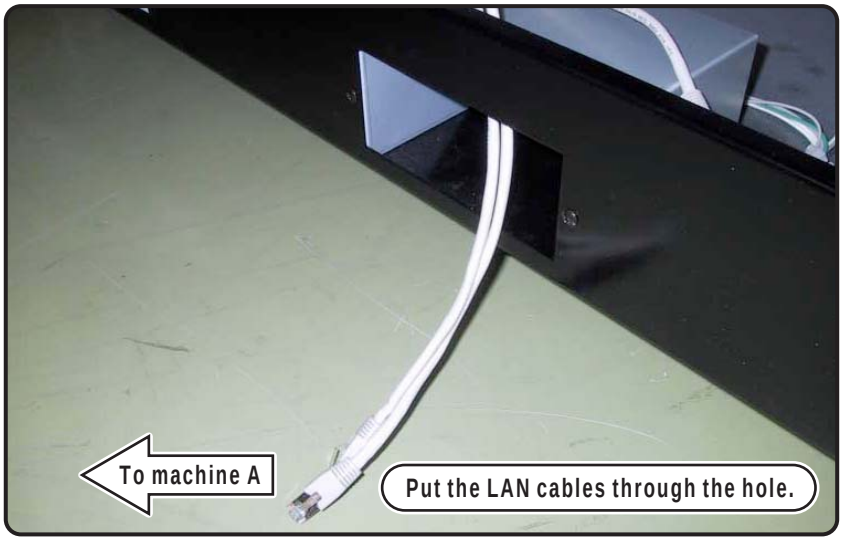

Work on machine A

9 Connect the two LAN cables from machine B to Port 3 and Port 4 of the HUB. Either of Port 3 or Port 4 is OK.

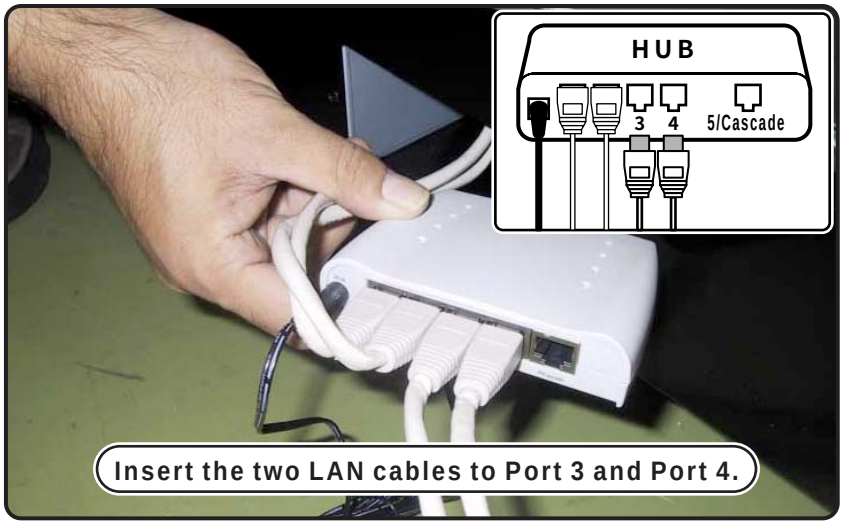

IMPORTANT

Make sure the LAN cables are securely connected to the HUB.

Work on machine A

10 Retract the HUB inside the HUB box.

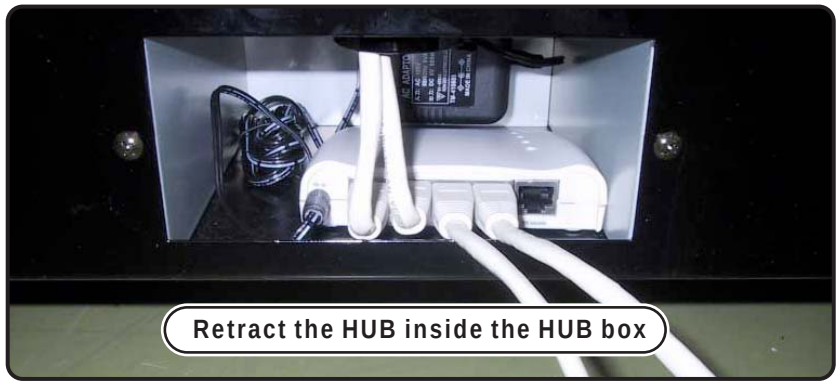

Work for the both machines

11 Install rear door B for both machine A and B. [Three Semuth screws (W): M5 x 12]

12 With this, connection work is complete.

Wiring method of [Operation of two machines (2)]

⚠ CAUTION

- **Do not let the LAN cable be out in a passageway. Players or a member of the gallery may stumble on it.**
- **For connection work of this wiring method, a LAN cable between the two machines shall be prepared by the customer. Purchase a cable with appropriate length according to the distance between the two machines. Use a LAN cable (straight) of class 3 or more and shielded type.**

Work for the both machines

1 Remove the rear door B. [Three Semuth screws (W): M5 x 12]

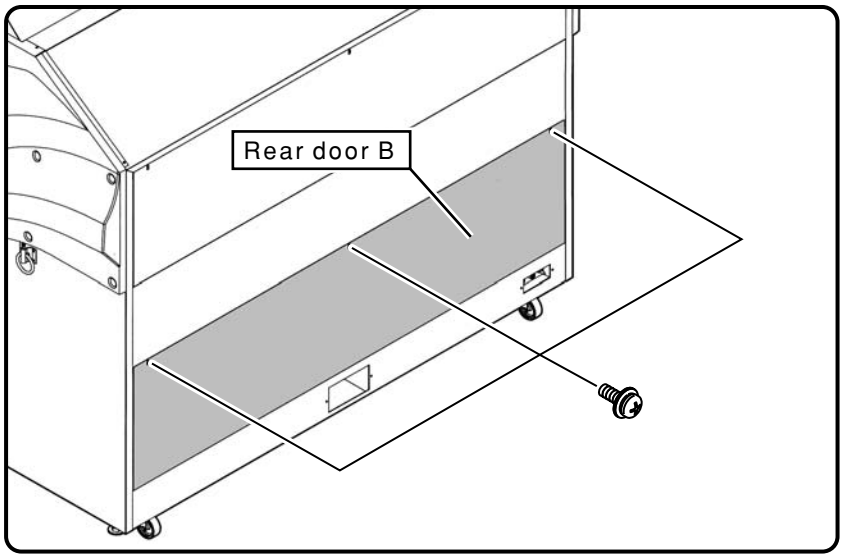

Work for the both machines

2 Take the HUB and AC adapter (accessories) from a package.

Work for the both machines

3 Insert the AC adapter to the power outlet inside the HUB box.

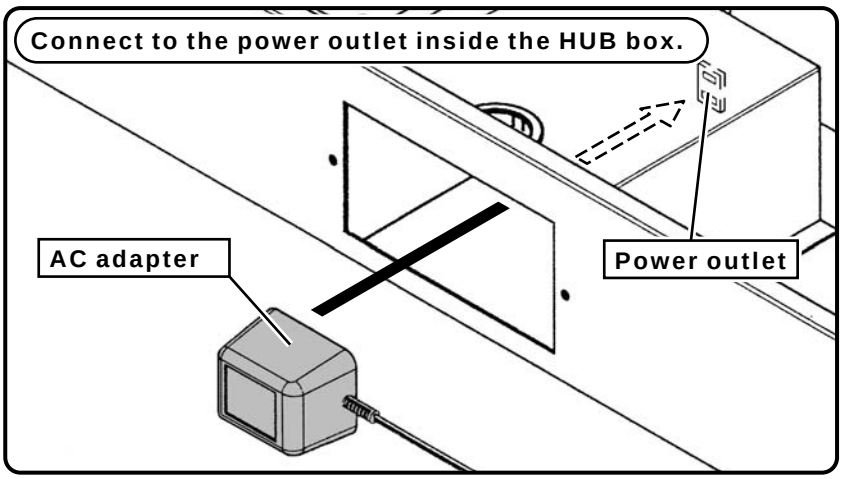

Work for the both machines

4 Insert the DC plug of the AC adapter to the DC jack.

Work on machine A

5 Slide the HUB select switch to the [HUB] position.

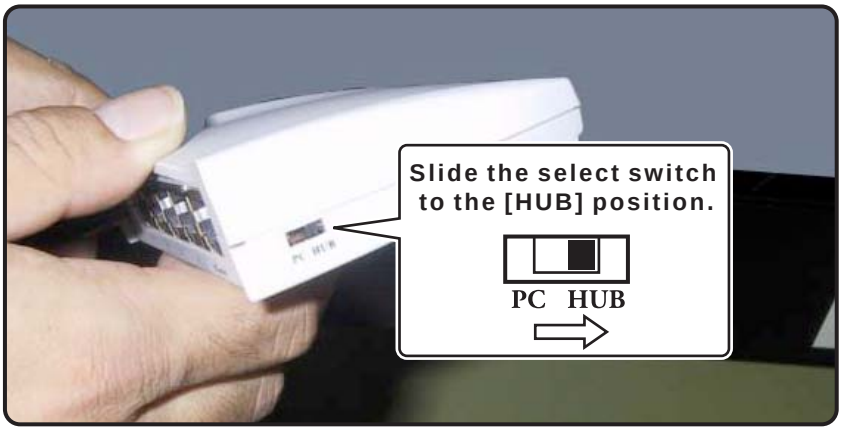

Work on machine A

6 Put the two LAN cables in the cabinet through the hole on the HUB box and pull them outside.

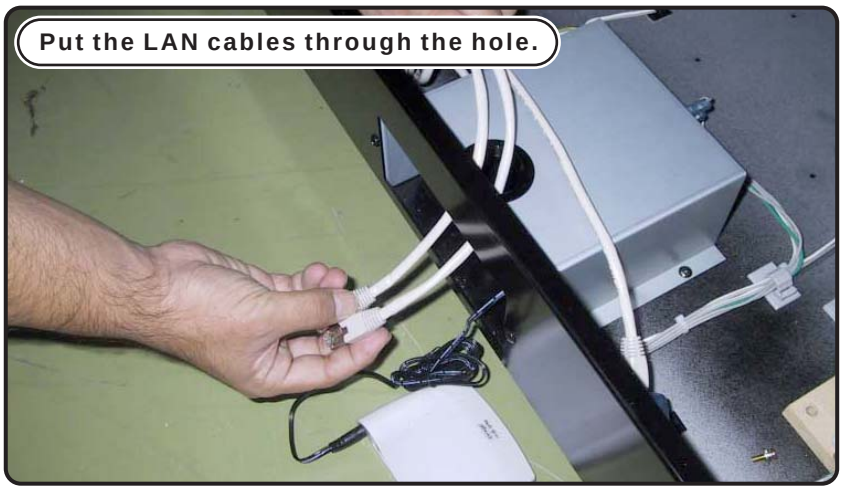

Work on machine A

7 Connect these two cables to Port 1 and Port 2 on the HUB. Either of Port 2 and Port 3 is OK.

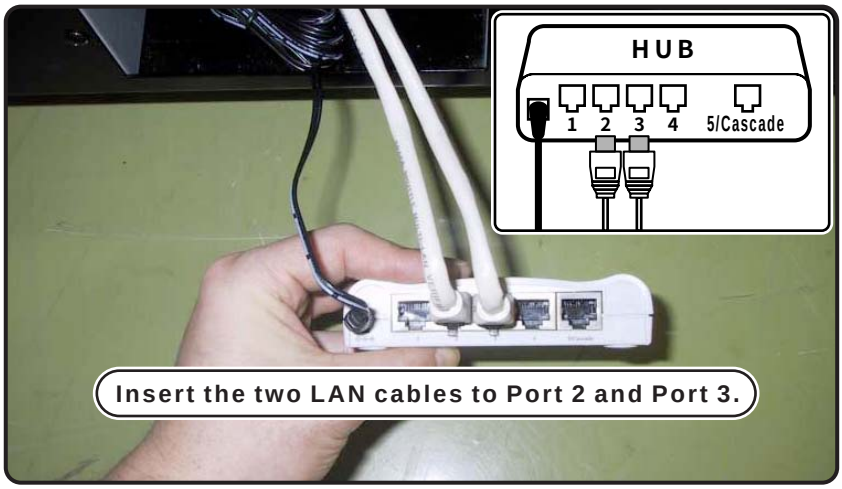

IMPORTANT

Make sure the LAN cables are securely connected to the HUB.

Work on machine B

8 Slide the select switch on the HUB for machine B to the [PC] position.

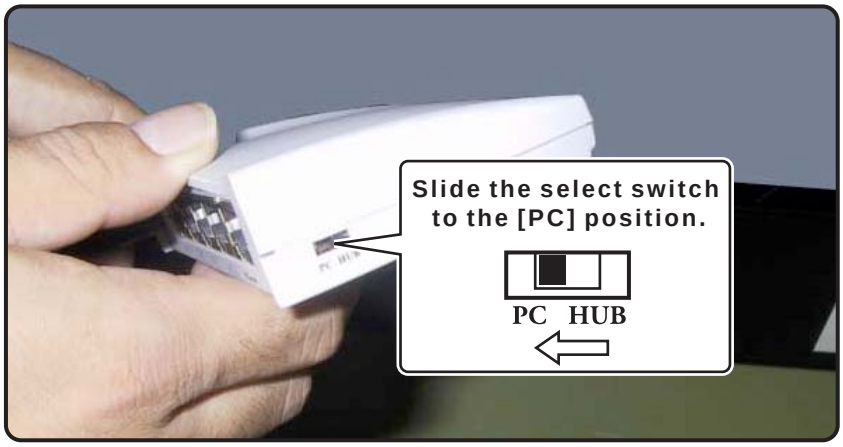

Work on machine B

9 Put the two LAN cables of machine B through the hole of the HUB box

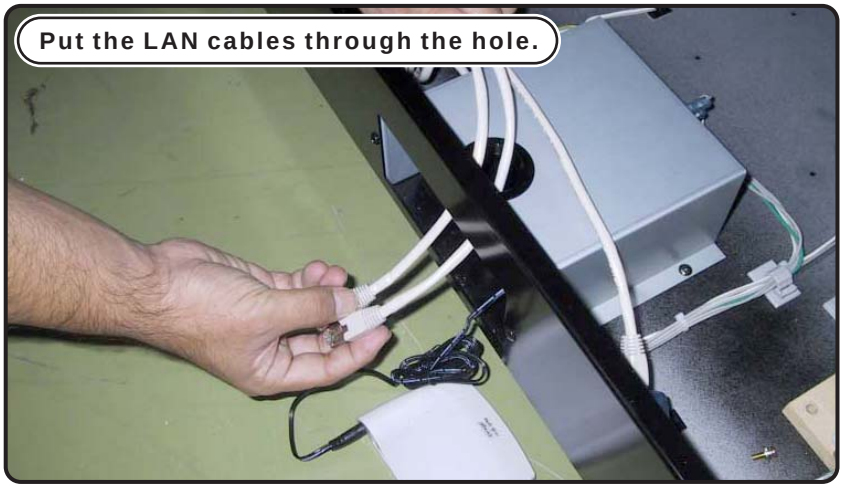

Work on machine B

10 Connect the two LAN cables from machine B to Port 2 and Port 3 of the HUB. Either of Port 2 or Port 3 is OK.

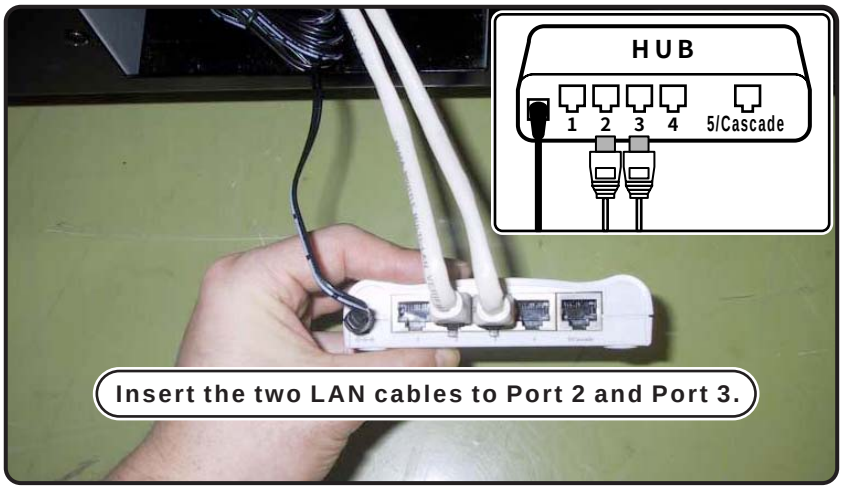

IMPORTANT

Make sure the LAN cables are securely connected to the HUB.

Work on machine B

11 Connect the LAN cable (straight) you purchased to the HUB Port 1 for machine B and lay the cable to machine A.

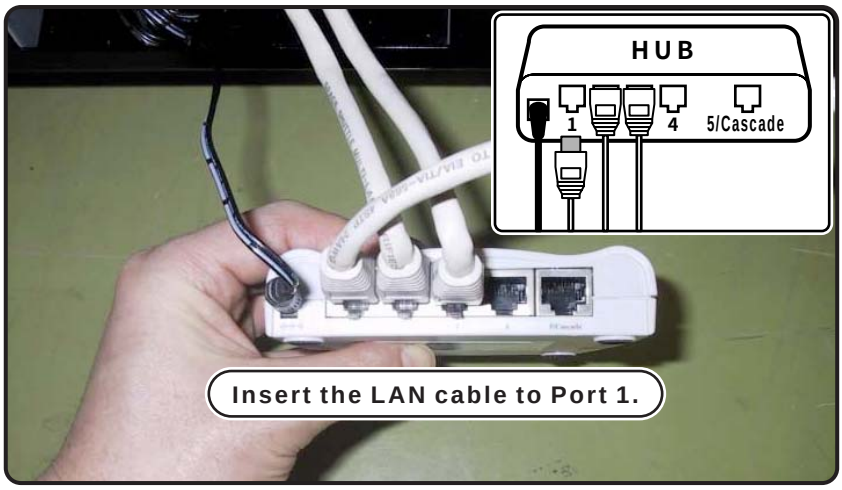

IMPORTANT

Make sure the LAN cables are securely connected to the HUB.

Work on machine B

12 Connect the LAN cable from machine B to Port 5.

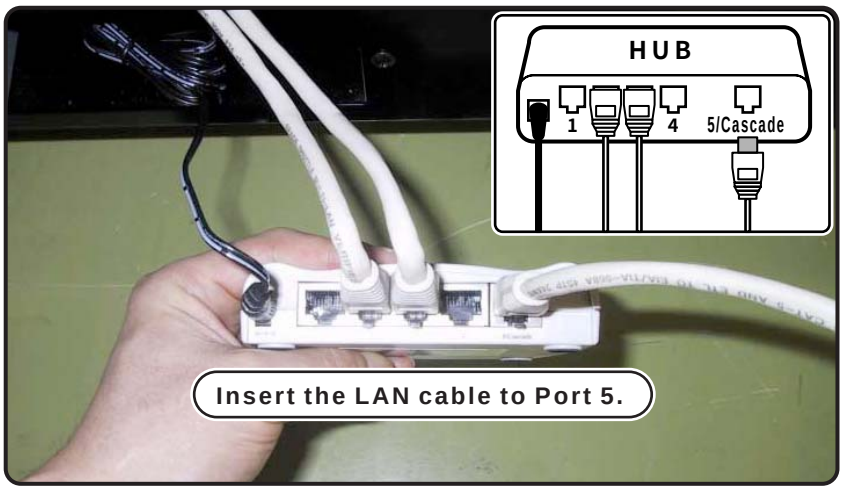

IMPORTANT

Make sure the LAN cables are securely connected to the HUB.

Work for the both machines

13 Retract the HUB inside the HUB box.

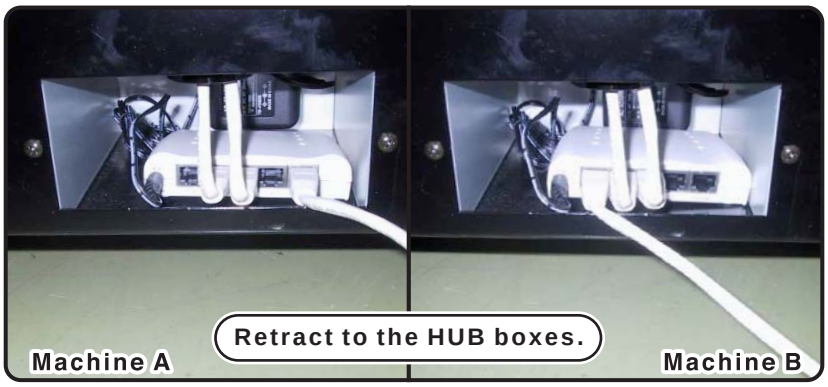

Work for the both machines

14 Install rear door B for both machine A and B.
[Three Semuth screws (W): M5 x 12]

15 With this, connection work is complete

Chapter 3: Operation

■ 3-1. Operation check

⚠ CAUTION

●Make sure to check the function of each component after installing the machine.

■ Operation check procedures

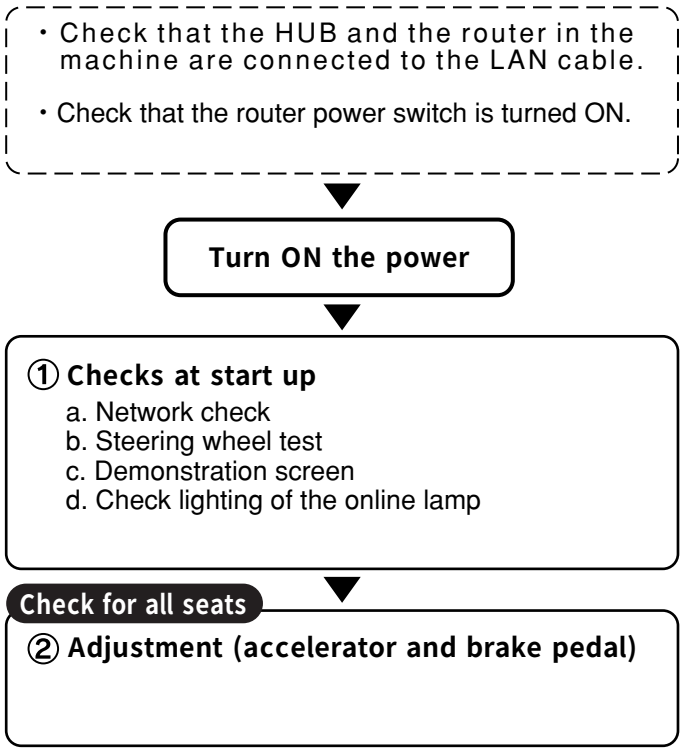

Turn ON the power

1 Turn ON the power switch located at the lower right on the back of the machine. When using two machines with communication, turn ON the power switches of both machines.

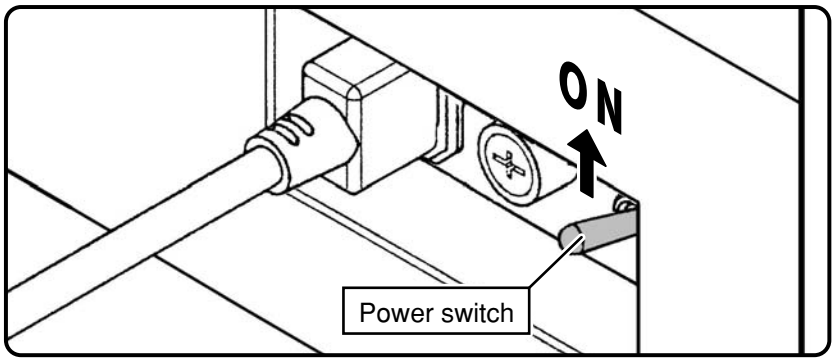

① Checks at start up

1 After turning ON the power, a black screen will continue for a while.

Start up time
40 seconds to 1 minute and 30 seconds

2 a. Network check screen
After the line is connected, a [True] message appears on the [Other Machine Connection] line.

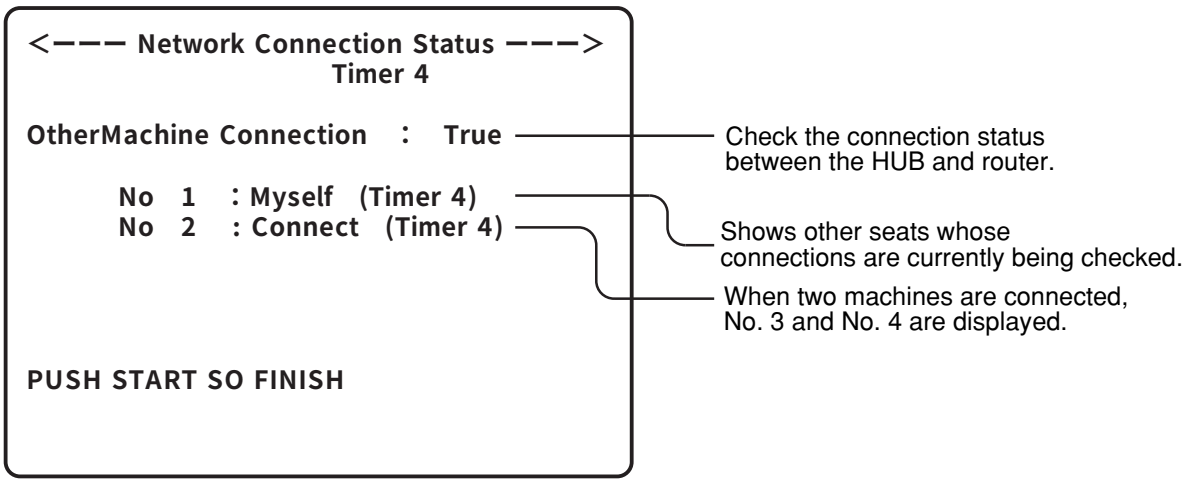

3 **c. Steering wheel test**
The steering automatically turns left and right and adjusts the position.

IMPORTANT During the steering wheel test, do not touch the steering wheel. Otherwise, the position may deviate.

4 **d. Display demonstration screen**
The monitor changes with the following orders: [Notice screen] -> [TAITO signature screen] -> demonstration screen.

Troubleshooting when starting up

See the item that was displayed on the monitor, and investigate the cause. After checking, re-input the power.

■ CASE 1

The HUB may have a problem.

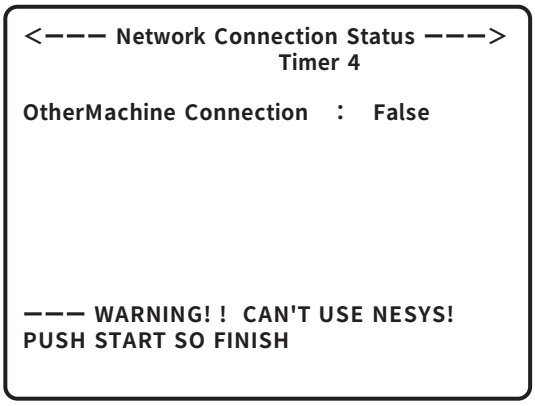

HUB trouble

- The HUB is not connected to the machine.
- The AC adapter of the HUB is disconnected.
- Faulty connection or disconnection of the cable that connects the HUB and machine.
- Faulty setting of the select switch on the HUB.

② Adjustment of the accelerator pedal

1 Open the rejecter door and press the test switches on both seats.
When two machines are connected, start up the test mode for all four seats.

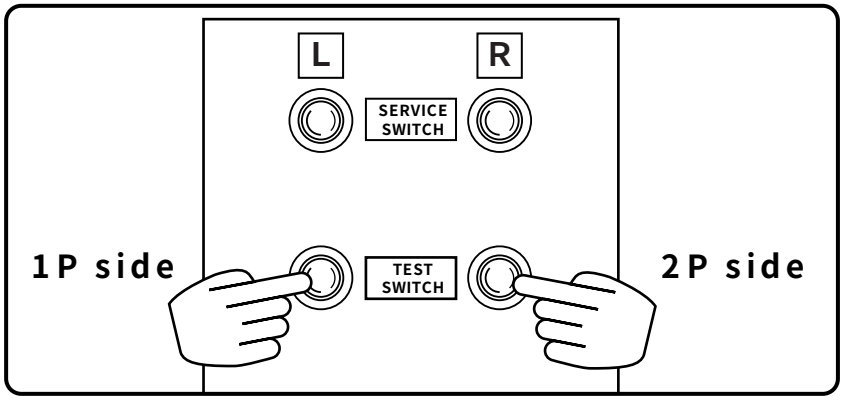

2 Select the [ADJUSTMENT] using the shift lever, and press the start button.

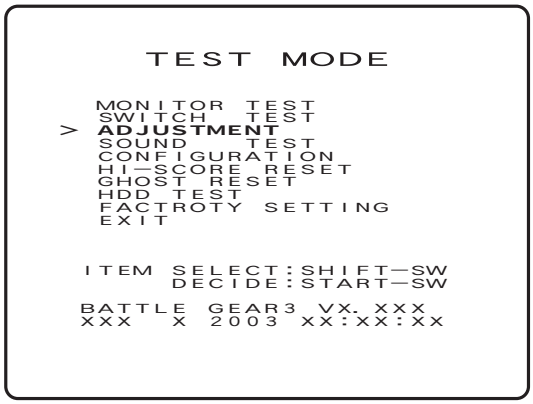

Adjustment of the accelerator pedal

1 Press your foot down on the accelerator pedal to the end and press the start button.

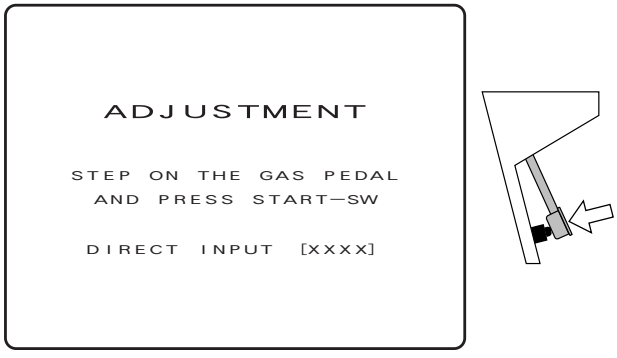

2 Release the accelerator pedal and press the start button.

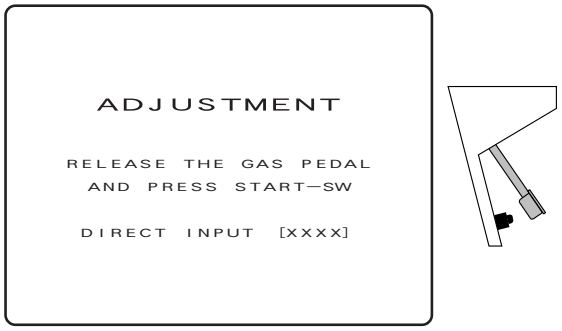

3 Press your foot down on the brake pedal to the full and press the start button.

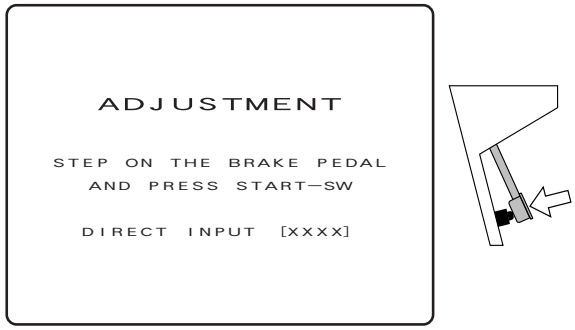

4 Release the brake pedal and press the start button.

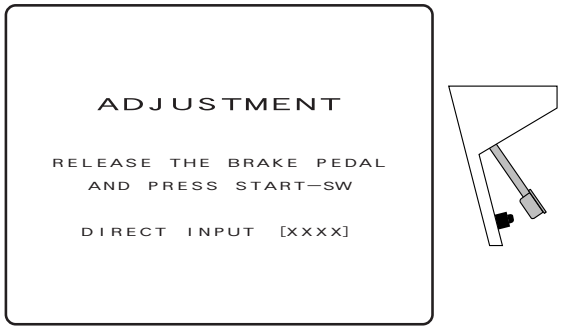

5 Store the adjusted data. Select [YES] using the shift lever and press the start button.

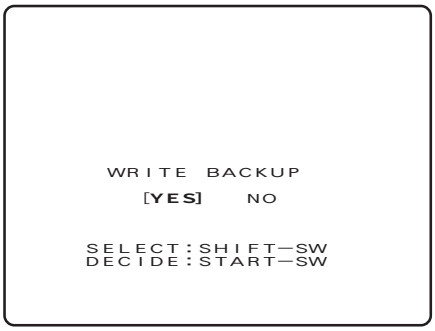

■ 3-2. Game details

■ Basic rules

A player selects a car (from 32 models of six manufacturers) and course (from a total of seven courses).
When a player clears each checkpoint within the specified time and reaches the goal, the game will be cleared. A player competes for time and rank. When the remaining time becomes zero, the game will be over.

1 Insert a coin; the introduction screen appears.

2 Press the start button, the car select screen appears.

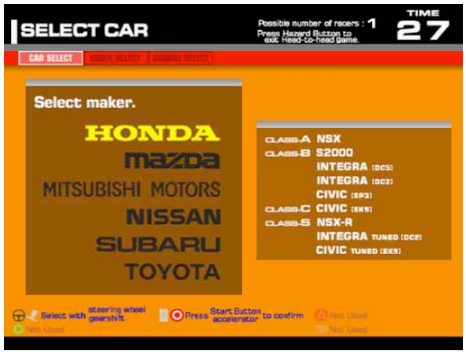

1) Select the manufacturer
2) Select the car model and color
3) Select the transmission type

3 Select the mode from time attack, normal race and one makeup race.
※A one makeup race is displayed while pushing the hazard button according to the normal race by the mode selection.

4 Select the course from a total of seven courses.
After selecting the course, the game will start.

Communication match play

Select the communication match function and press the start button; the headlight flashes (passing). By passing, the screen becomes brighter. This also occurs on the screen of the opponent.

1） Battle mode (two to four players)

When the game starts with communication match, the mode select screen shows ✗battle mode,ŧ not ✗time attack.ŧ

Match races between entry key holders and non-holders are possible. As this mode does not have communication correction (real battle) function, each car offers each model┘s performance.

2） Normal race (two to four players)

Up to four cars can be run for a race. If the number of players is less than four, the COM car runs instead. During the race, the cars are given communication correction. Therefore, even if there are differences of performance between car models, they can enjoy heated races by correcting each car┘s performance to be even.ed.

Introduction of convenient functions

○ Communication match race cancel function

While pressing the hazard button, turn the key to start; the machine cancels the communication match race between machines from the beginning.
Even if you do not have an entry key, the machine functions as above. If the machine has not yet finalized the match race, you can cancel while starting up the machine, by pressing the hazard button.

○BGM tune change function that makes possible to run with your favorite musical tune

On the course select screen, press the view change button to change the BGM tune. Music tune names are displayed at the lower left of the screen.

○ Display/non-display of ghost cars

While in time attack, press the start button, the ghost cars will not be displayed. Only frames of the ghost cars disappear, and their shadows and lamp flares are displayed.

○ Forced game over function (one player play only)

Keep pressing both the start button and hazard button at the same time; the machine starts counting to the forced end of the game. Keep pressing these buttons until the counter counts down to zero. Turning OFF the entry key brings the identical function.

○ Back and forth reverse function of the manual transmission

For players who are familiar with a manual shift, press forward to shift up and pull toward you to shift down. On the mission selection, move the cursor to [MT] and press the view change button and determine.
(From the BG3 garage of the paid contents, you can also reverse the manual transmission setting.)

○ Sound volume automatic adjustment function (effective when communication between machines is established)

While playing the game, a seat not played will lower its sound volume. Players can concentrate on the game without being disturbed by sounds from the empty seats.

■ 3-3. Description for functions

■ Central control

The central control is located inside the rejecter door.

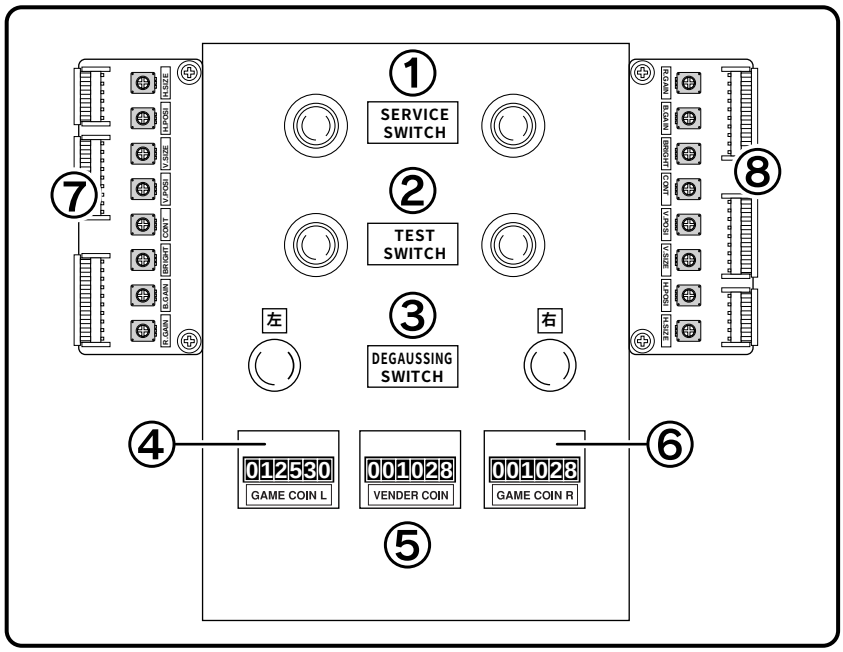

① Service switch (1P, 2P)

Add one coin by one press without increasing the count of the coin meter.

② Test switch (1P, 2P)

Change to the test mode.

③ Degaussing switch (1P, 2P)

Use when the screen has color shading.

④ Coin meter (1P)

One count for 100 yen.

⑤ Vendor meter (2P)

One count for 100 yen.

⑥ Coin meter (1P)

One count for 100 yen.

⑦ Monitor adjuster for 1P

⑧ Monitor adjuster for 2P

■ 3-4. Test mode

How to start the test mode

1 Open the rejecter door, and press the test switch on the seat to test.

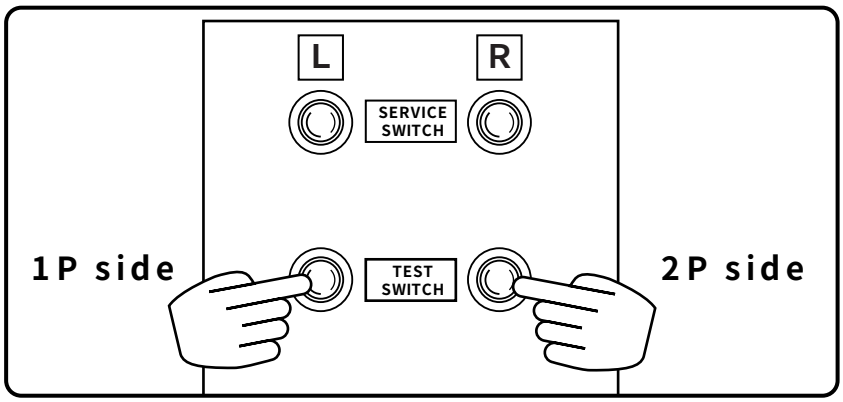

2 The test mode menu screen appears

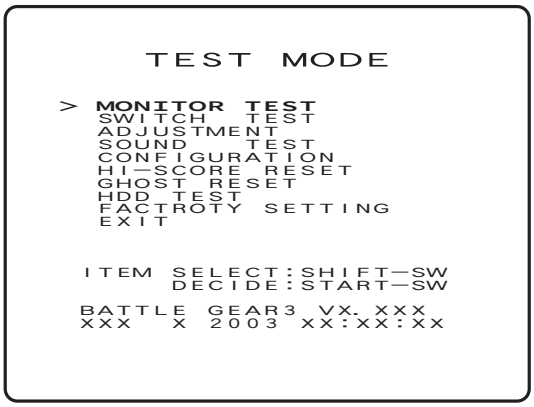

Operation method	
Shift lever	Move the cursor, and select YES or NO.
Start button	Execute selected item.
View change and hazard buttons	Change numeric figure and details.

How to end the test mode

1 On the menu screen, select EXIT and press the start button.
The machine is reset and returns to the game mode.

Monitor test

1 On the menu screen, select MONITOR TEST and press the start button.

2 A crosshatch appears on the screen.

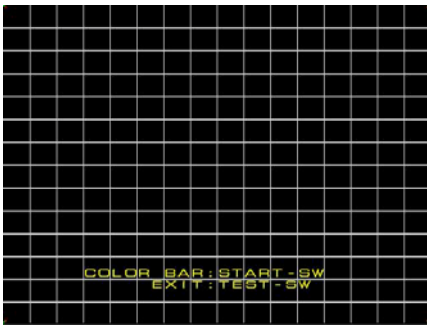

3 Press the start button; the screen changes to a color bar display.

4 Press the start button; the screen changes to white. Another press of the start button changes to cross hatch screen.

5 When the image display size or hue is not normal, adjust, referring the description for the monitor screen adjustment.
[Adjustment of the monitor screen => See page 86.]

6 Press the test switch; the monitor goes back to the menu screen from any screen display.

Switch test

1 On the menu screen, select the SWITCH TEST, and press the start button.

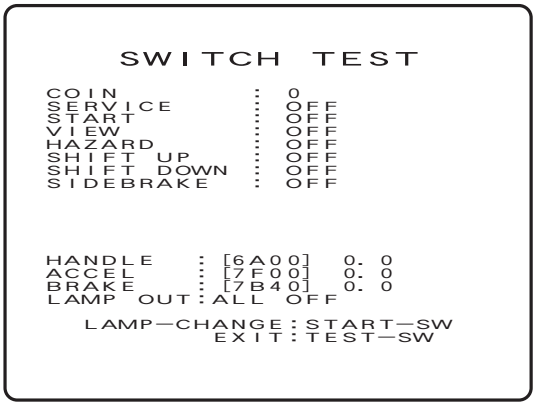

Item	Display details	Detection result
COIN	Detects input of the coin switch	When there is an input, the counter increases by one.
SERVICE	Detects input of the service switch	・When there is an input, the monitor displays [ON.] ・When there is no input, it displays [OFF.]
START	Detects input of the start button	
VIEW	Detects input of the service switch	
HAZARD	Detects input of the start button	
SHIFT UP	Detects input of the shift lever	
SHIFT DOWN	Detects input of the shift lever	
SIDE BRAKE	Detects input of the side brake lever	
HANDLE	Detects input of the steering wheel	Detected value changes
ACCEL	Detects accelerator pedal input	
BRAKE	Detects input of the brake pedal	
LAMP OUT	Displays lamp name currently lighting	The lamps light one after another

● How to confirm the input of each switch

■ Coin switch
Check the input of the coin switch. Lightly lower the actuator of the coin switch; the numeric value on the screen rises by one and the counter of the coin meter also increases by one.

■ Service switch
Press the service switch and when the screen display changes from OFF to ON, the switch is normal.

■ Start, view change, and hazard button
Press these buttons, when the screen changes from OFF to ON, the respective switch is normal.

● Input check method of shift lever

Fold down the shift lever toward you, and if the display of [SHIFT UP] changes from [ON] to [OFF] fold it down to from and the when the display for [SHIFT DOWN] changes from [ON] to [OFF] the shift lever is normal.

● Input check method of side brake

Pull the side brake; when the display changes from OFF to ON, the side brake lever input is normal.

● Input check method of the steering wheel and pedals

Operate the steering wheel, accelerator pedal, and brake pedal; the direct value and check value on the screen change accordingly. When the displayed values do not change, or if the displayed value is different from respective value listed below, you must adjust it.(Each time the power is input, the machine automatically adjusts the steering wheel.)

Detect value of the steering wheel	Accelerator pedal detection value	Brake pedal detection value
Turn it left to the end -> 1.0	Release -> 0.0	Release -> 0.0
Adjust to the center -> 0.0	Foot -> 1.0	Foot -> 1.0
Turn it right to the end -> -1.0		

● Lamp test

Press the start button; the lamps light one by one. The screen displays the name of the currently lit lamp.

Adjustment

Adjust the accelerator and brake pedals.

1 On the menu screen, select the ADJUSTMENT item and press the start button.

```
ADJUSTMENT

STEP ON THE GAS PEDAL
AND PRESS START—SW

DIRECT INPUT [XXXX]
```

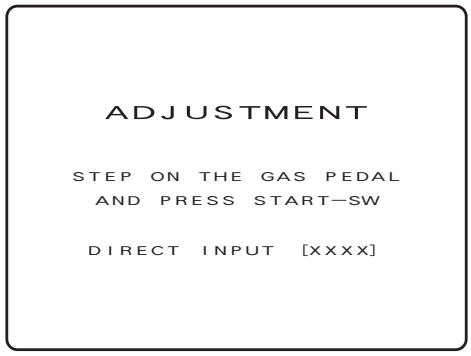

2 Adjust the pedals, following the instructions on the screen.

1) Press your foot down on the accelerator pedal to the full and press the start button.
2) Release the accelerator pedal and press the start button.
3) Press your foot down on the brake pedal to the full and press the start button.
4) Release the brake pedal and press the start button.

3 Save the adjusted data.
If you do not want to save the adjustment, select [NO] using the shift lever. If you want to save the adjustment, select [YES] and press the start button.

Sound test

1 On the menu screen, select ﾒSOUND TESTﾓ and press the start button.

```
SOUND TEST

>MASTER VOL      50%
 SE  VOLUME     100%
 SE  CODE         0
 BGM VOLUME      83%
 BGM CODE         1

 WOOFER LVL      66%
 EXIT



  BGM STOP

    BGM PLAY:START
 ITEM SELECT:SHIFT—SW
VALUE SELECT:HAZARD&VIEW—SW
        EXIT:TEST—SW
```

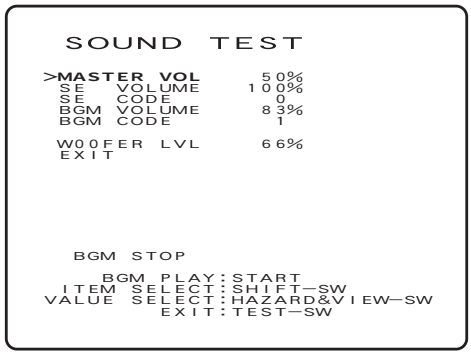

Item	Display details	Numeric value range, factory setting
MASTER VOLUME	Full sound level from the speakers	0～100（50）
SE VOLUME	Sound level of effective sound	0～100（100）
SE CODE	Tune number of effective sound to listen as a test.	0～54
BGM VOLUME	Sound level of tune	0～100（83）
BGM CODE	Music number to listen as a test	1～19
WOOFER VOLUME	Woofer sound level	0・33・66・100（66）

● Operation method
Select an item using the shift lever, and change the numeric value using the view change (increase) and hazard (decrease) buttons. To replay, press the start button.

● How to adjust the MASTER volume
Select [MASTER VOLUME] and adjust the sound loudness level. Press the start button; the tune selected by the [BGM CODE] is played with the adjusted sound level.

● How to adjust the SE (effect sound) volume
Select the [SE VOLUME] and adjust the sound loudness level. Press the start button; the tune selected by the ✗SE CODE┼ is played with the adjusted sound level.

● How to adjust the BGM (effect sound) volume
Select the [BGM VOLUME] and adjust the sound loudness level. Press the start button; the tune selected by the [BGM CODE] is played with adjusted sound level.

● How to adjust the WOOFER volume
Select the [WOOFER VOLUME] and adjust the sound loudness level.

2 After adjusting the sound volumes, select [EXIT] using the shift lever, and press the start button.

3 Save the set data.
If you do not want to save the adjustment, select [NO] using the shift lever.
If you want to save the adjustment, select [YES] and press the start button.

Configuration

1 Select the [CONFIGURATION] item on the menu and press the start button.

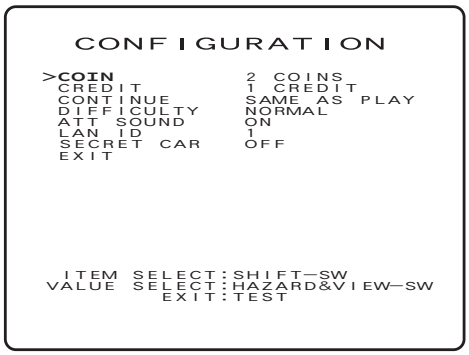

Item	Screen display	Display details
COIN	1～9COIN(S)	Number of coins per game
	FREE PLAY	Free play mode
CREDIT	1～4CREDIT(S)	Number of game to be able to play
CONTINUE	1～8COIN(S)	Setting play fee for continue play
	SAME AS PLAY	Setting to same number of coins as the play fee
(SAME AS PLAY)	OFF	Setting not to offer continue play
DIFFICULTY	EASY	Easy
	NORMAL	Normal
	HARD	Difficult
(NORMAL)	VERY HARD	Very difficult
ATT SOUND	ON	With sound during demonstration
(ON)	OFF	Without sound during demonstration
LAN ID NUMBER	1 to 4	ID number for communication play
SECRET CAR	ON	With a secret car
(OFF)	OFF	Without a secret car

Descriptions in parenthesis ( ) are factory settings.

● LAN ID NUMBER

When the machine will be operated in the communication play mode, you have to set the ID numbers. ID number 1 is assigned to left seat, and ID number 2 is assigned to right seat when the machine is delivered. If the same numbers are set for both sets of seats, the machine cannot be used in the communication play mode. If you reset the configuration to the factory settings, you will have to enter the ID numbers again.

■ Two game machines communication play mode

The BATTLE GEAR 3 game can use two game machines to allow up to four players to play simultaneously. To do this, you must assign ID numbers from 1 to 4.

2 After the settings, select [EXIT] using the shift level and press the start button.

3 Save the set data.
If you do not want to save the data, select [NO] using the shift lever. If you want to save, select [YES] and press the start button.

Rest ghost

When to play the attack mode without using an entry key, ghost cars appear to compete in the race. This function resets the ghost data to change to the default ghost.

1 On the menu screen, select [GHOST RESET] and press the start button.

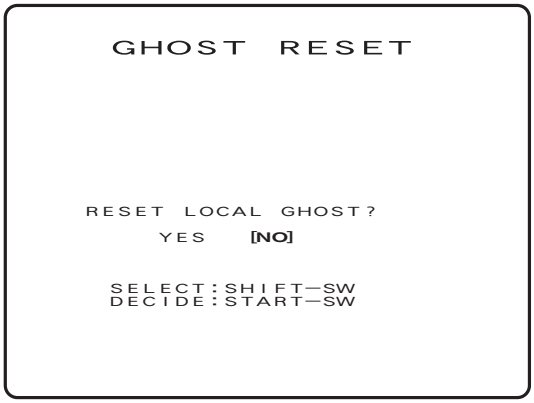

2 If you do not want to reset, select [NO.] If you want to reset, select [YES] using the shift button and press the start switch.

Rest hi score

It returns to the ranking which reset the ranking data in time attack mode and is contained by the default.

1 On the menu screen, select [HI SCORE RESET] and press the start button.

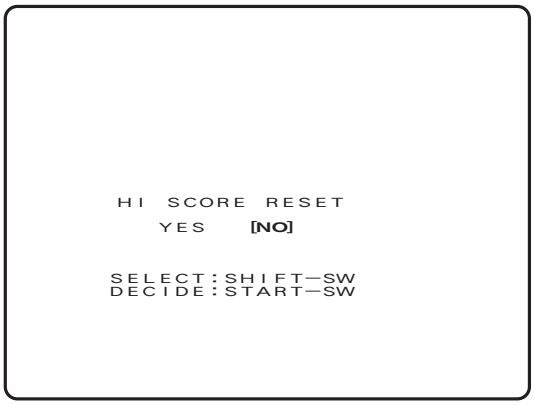

2 If you do not want to reset, select [NO.] If you want to reset, select [YES] using the shift button and press the start switch.

Hard disk test

Check the hard disk.

It will take approximately 10 minutes to complete the check.

1 On the menu screen, select the [HDD TEST] and press the start button.

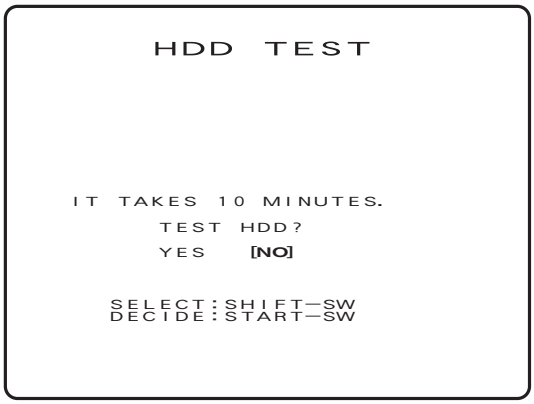

2 If you do not want to test, select [NO.] If you want to test, select [YES] using the shift button and press the start switch.

3 If there is an error on the hard disk, the screen shows an error message.

Factory setting

This function changes the configuration, sound, and adjustment settings to the default settings. After executing the factory setting, you have to the adjust date and time.

1 On the menu screen, select the [FACTORY SETTING] and press the start button.

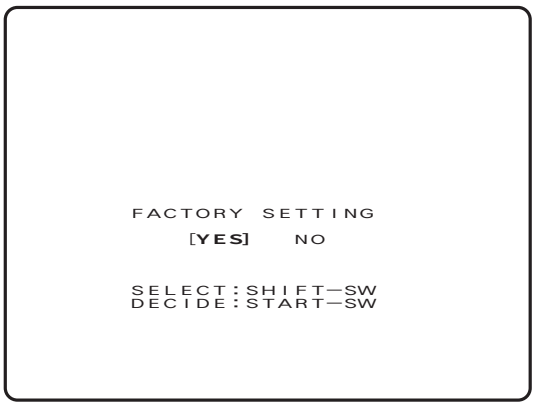

2 If you do not want to initialize, select [NO.] If you want to initialize, select [YES] using the shift button and press the start switch.

3 When you select [YES] the monitor shows the date and time setting screen. Select an item using the shift lever and change numeric values using the view change and hazard buttons. After setting, press the start button.

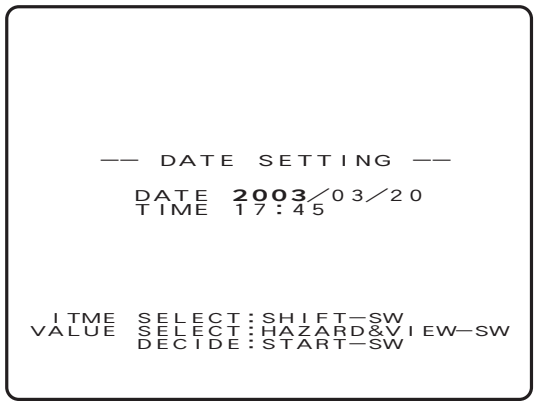

4 This function adjusts the accelerator and brake pedals. Follow the instructions on the screen for adjustment.

Chapter 4: Maintenance

■ 4-1. Maintenance and check

⚠WARNING

●Make sure to perform daily checks

■ Daily check

Check and clean the machine before and after operation each day, following the items below. Especially carefully check positions where players may touch.

■ Check item (totally seven items)

① Breakage of power cord

・Check that nothing is put on the power cord.

② Power cord plug is securely inserted

・Check that the ground line of the plug adapter is connected.

③ No damage on appearance

・Check that there is no damage to or dirt on the cabinets.

④ Installation marginal spaces

・Check that the machine does not deviate from its original position due to looseness of height adjusters.
・Check that all the height adjusters touch the ground.
・Check that there is no damage to the adjuster bolts and casters.

⑤ Lock of rejecter door

・Check that the door is not loose.

⑥ Operation check

・Check that the machine emits sound normally.
・Check that the fluorescent lamps and other lamps light.
・Check that there is no abnormal sound.
・Check that there is no abnormality on the operation systems.

⑦ Function of each meter

Cleaning

Normally, wipe off the outside of the cabinets using soft dry cloths.
If dirt cannot be cleaned off, soak a cloth in a solution of neutral solvent and diluted water. Then, squeeze it tight and wipe with this cloth. After that, wipe off with a dry cloth again.

IMPORTANT

- Do not use thinner or benzene for cleaning.

■ 4-2. Monitor adjustment

⚠WARNING

●Maintenance work of the machine shall be carried out only by a shop maintenance person. Do not perform work other than described in this manual.

●When you find damage or a fault in the machine, turn OFF the power switch and contact our technical service division. Operation of the machine while leaving a damage or fault may cause a severe fault or accident.

■ Adjustment of monitor screen

While looking at the monitor test, turn the adjustment dials.

1. Open the rejecter door and start up the test mode of a seat you want to adjust.
2. Execute the ｢MONITOR TEST｣ and display the crosshatch, color bar, and white screens. To change screens, press the start button.
3. Adjust each item using each dial in the rejecter door.

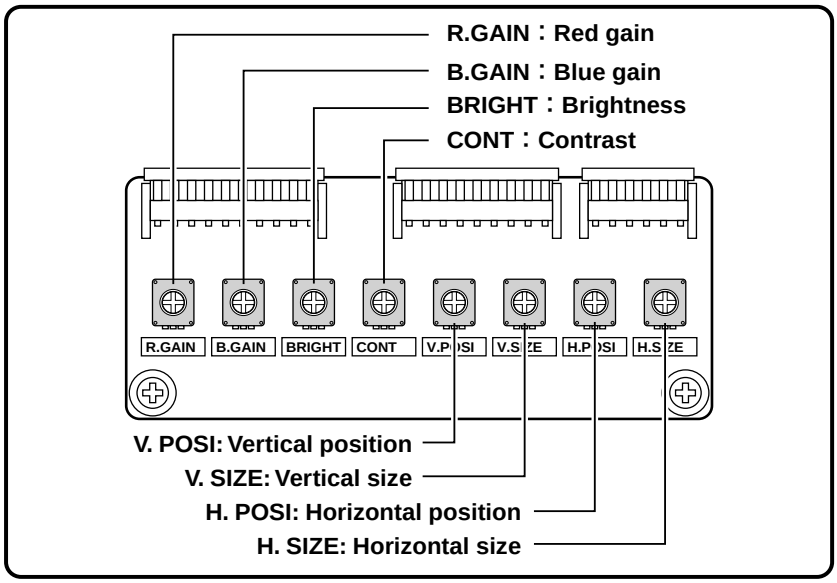

■ R. GAIN: Red gain

Adjust red color density.

■ B. GAIN: Blue gain

Adjust blue color density.

■ BRIGHT: Brightness

Adjust image brightness.

■ CONT: Contrast
Adjust image darkness.

■ V. POSI: Vertical position
Slide the image up and down to the required position.

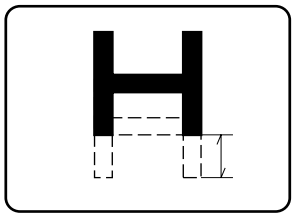

■ V. SIZE: Vertical size
Adjust vertical width of the image.

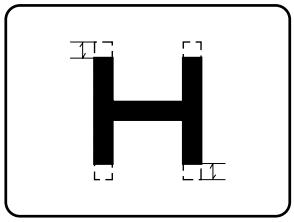

■ H. POSI: Horizontal position
Slide the image left and right to the required position.

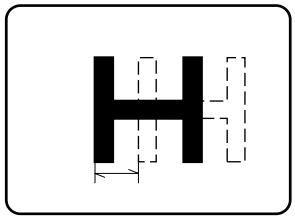

■ H. SIZE: Horizontal size
Adjust the horizontal width of the image.

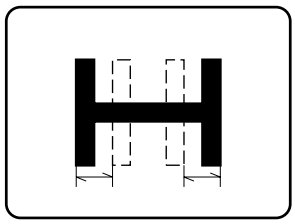

■ Monitor hue adjustment
Adjust the hue of the monitor screen using the degaussing switch.

1 Open the rejecter door and press a degaussing switch to correct. Keep pressing the switch until the image hue is corrected. Before pressing the degaussing switch, wait at least 10 minutes.

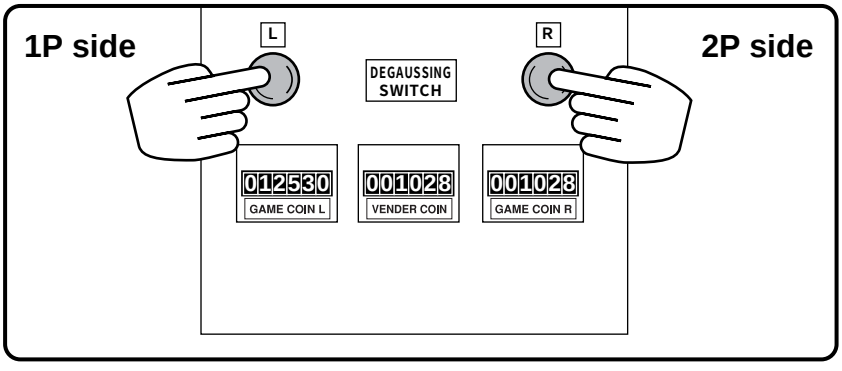

■ 4-3. Parts replacement

⚠WARNING

- **Only qualified arcade maintenance personnel or engineers should perform the maintenance described in this manual. Do not attempt to make any repairs or perform any maintenance not described in this manual.**
- **If any damaged or broken parts are found, turn OFF the power switch and contact us. Operating the game machine with damage or known problems may result in even more damage or personal injury.**
- **Use of parts other than genuine TAITO parts in the maintenance of the machine will be regarded as unauthorized modification. Never modify the machine. A fault may be caused.**

1）Replacing the fluorescent lamp

⚠CAUTION

- **Before replacing the fluorescent lamps and other lamps, make sure to turn OFF the power switch and leave for three minutes to cool them down. Starting work soon after turning the machine OFF may cause you to be burned.**

■ Inside the title panel (40 W)

One fluorescent assembly is located inside the title panel.
Remove the title panel before replacement.

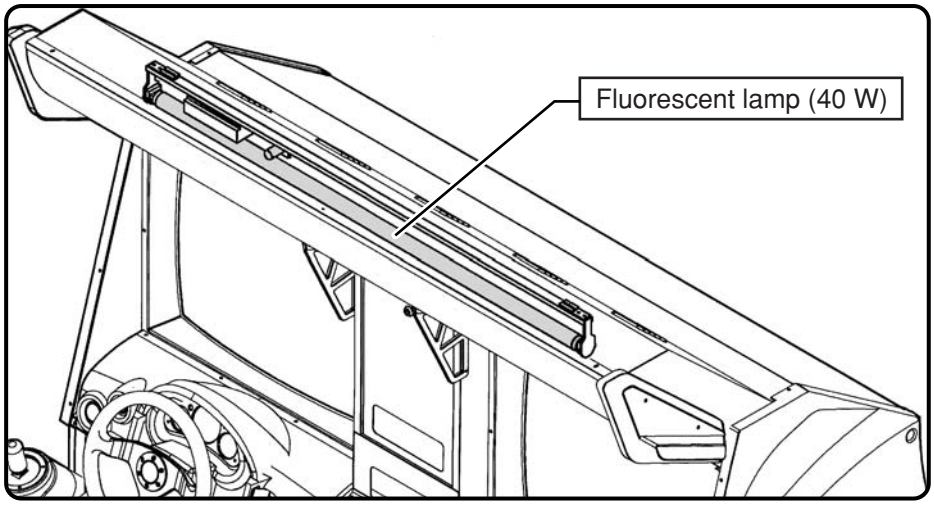

1 Turn OFF the power switch and leave it for three minutes.

2 Remove the title support and then the title panel.
[Trusses tapped tight: M4 x 10]

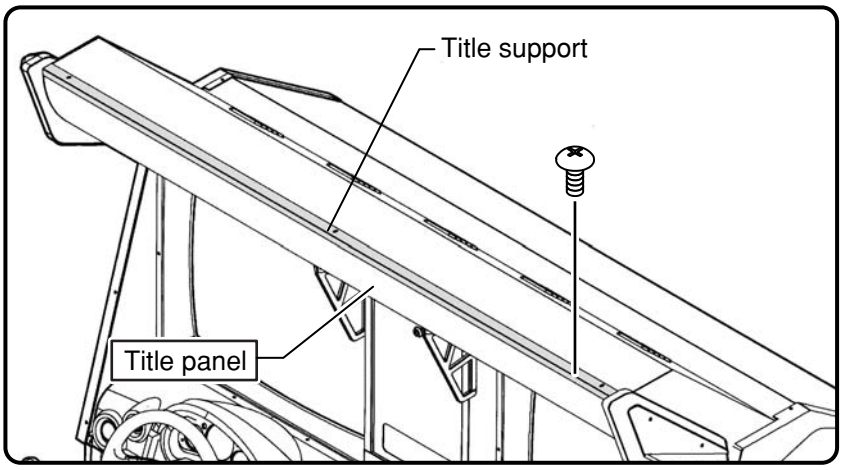

3 Replace the fluorescent lamp (40 W) and glow lamp.

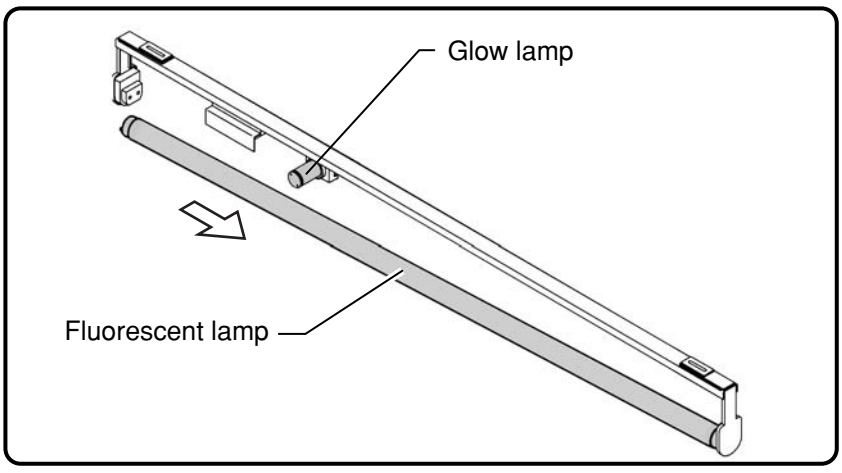

【Fluorescent lamp：C15 00069A　FL LAMP　FL40SEX-D-HG】
【Glow lamp：C14 00102A　GLOW LAMP　FG-4P】

2）Replacement of wedge lamp and removal of lamp switch

⚠CAUTION

●**Before the replacement work, make sure to turn OFF the power switch.**

1 Turn OFF the power switch

2 Remove the steering wheel. For removing, take out the emblem at the center by unscrewing three screws, and remove the lock nut inside, and pull out the steering wheel.

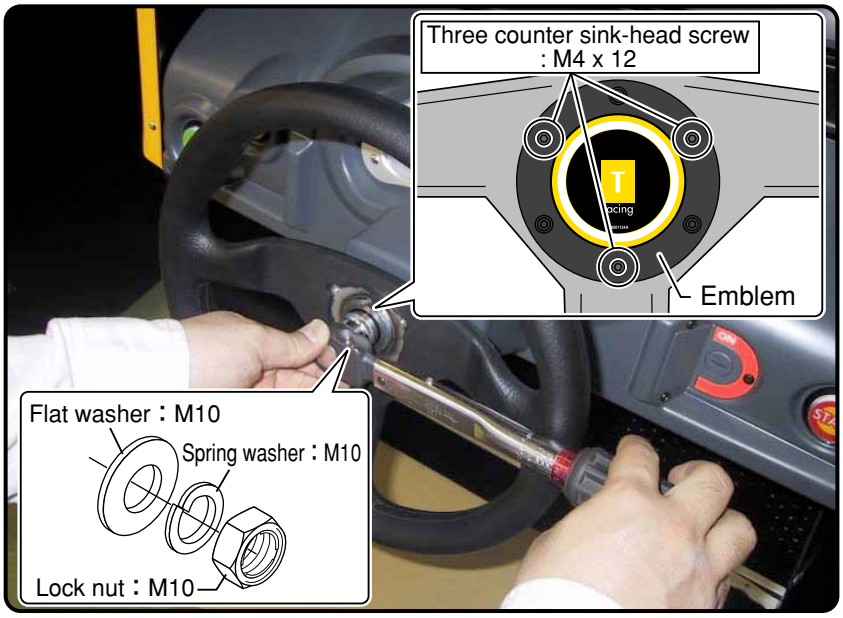

3 Remove the securing screws on the dashboard panel.

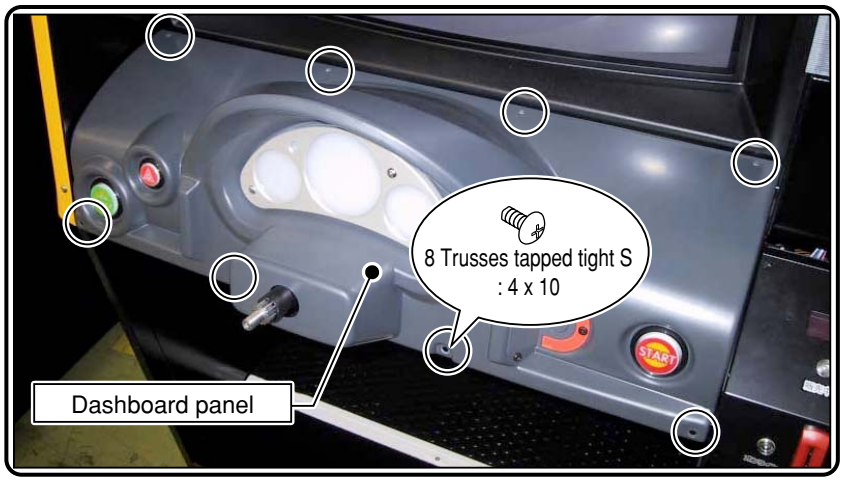

4 Remove two connectors inside the dashboard and remove the dashboard.

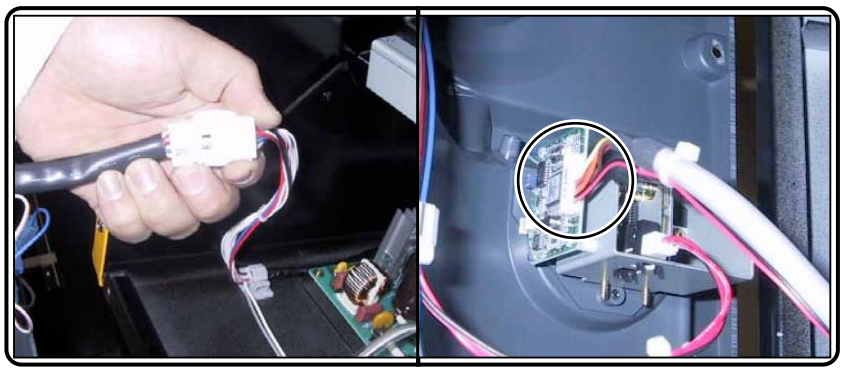

5 Remove the securing strap on the switch assembly of the wedge lamp to replace, and pull out the switch assembly. Then, replace the wedge lamp. Remove the securing nut so that the wedge lamp can be removed.

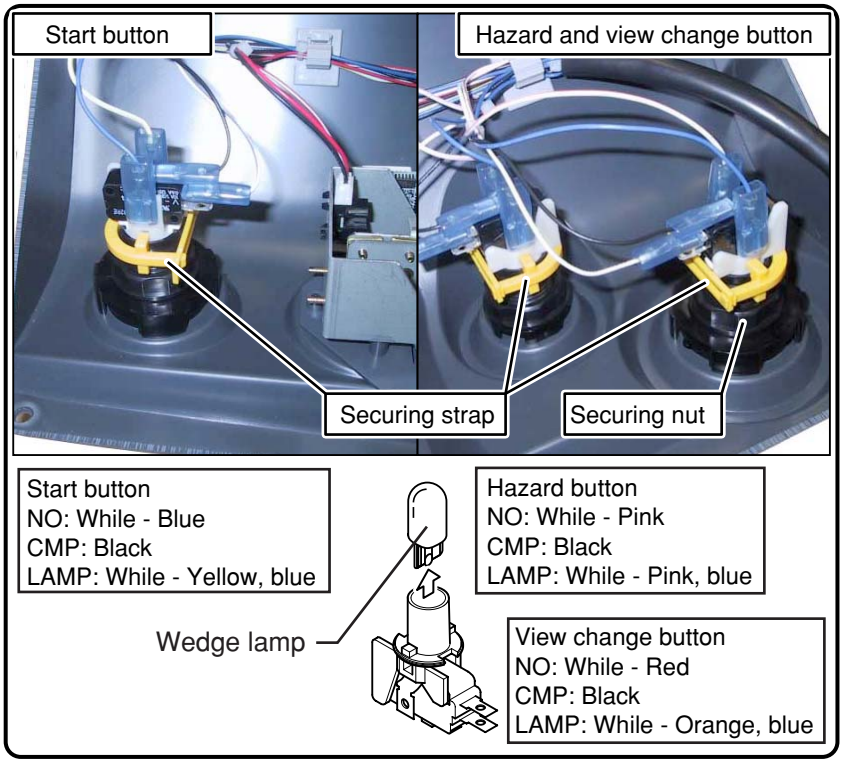

■ Start view change button
【C02 00433A　LAMP SWITCH-(THIN TYPE) OBSA-30UM-W-161】
■ Hazard button
【C02 00425A　LAMP SWITCH-(THIN TYPE) OBSA-45UM-W-161】
■ Wedge lamp
【C14 00320A　WEDGE LAMP 24V 3W】

6 Install the dashboard panel. 8 Trusses tapped tight: M4 x 10.

7 Turn the shaft right until it stops at the stopper.

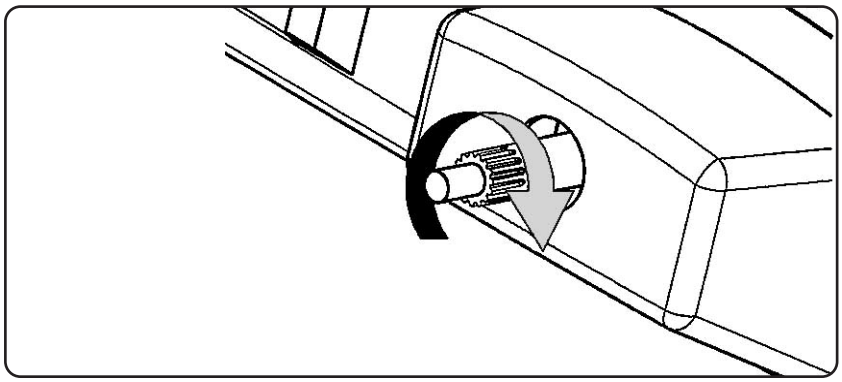

8 Position the steering wheel as shown below (the spoke directs the right side), and insert it into the shaft while matching the tooth. After it is inserted, turn the steering wheel left to the end. Check that the steering can be turned both left and right to the full equally.

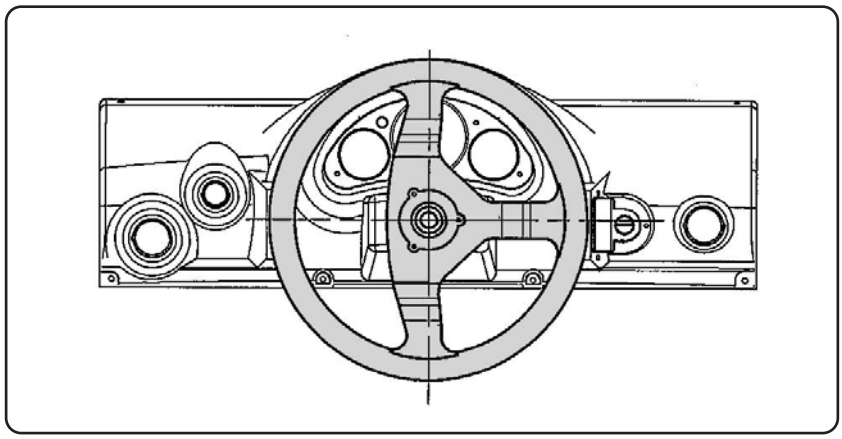

9 Secure the steering wheel. For securing, reverse the steps of step [2] above.

3）Replacement of cylinder mechanism assembly

⚠CAUTION

●**Before the replacement work, make sure to turn OFF the power switch.**

1 Turn OFF the power switch.

2 Remove the steering wheel and dashboard.

3 On the dashboard front side, remove the three screws securing the cylinder mechanism.

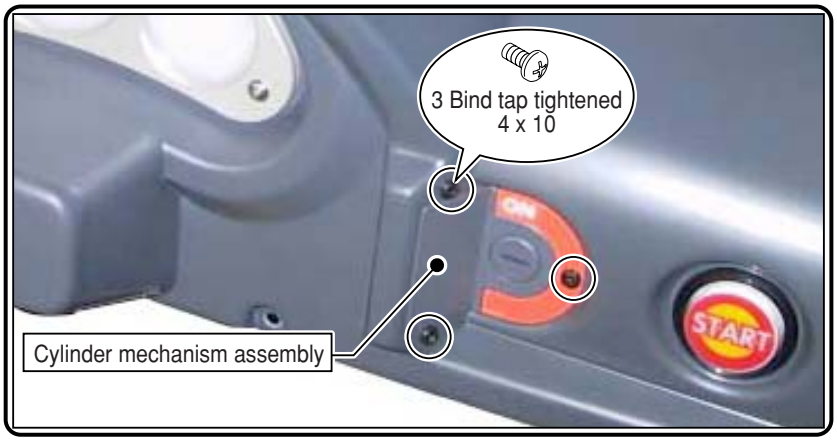

4 Remove the sensor connector and remove the cylinder mechanism assembly.

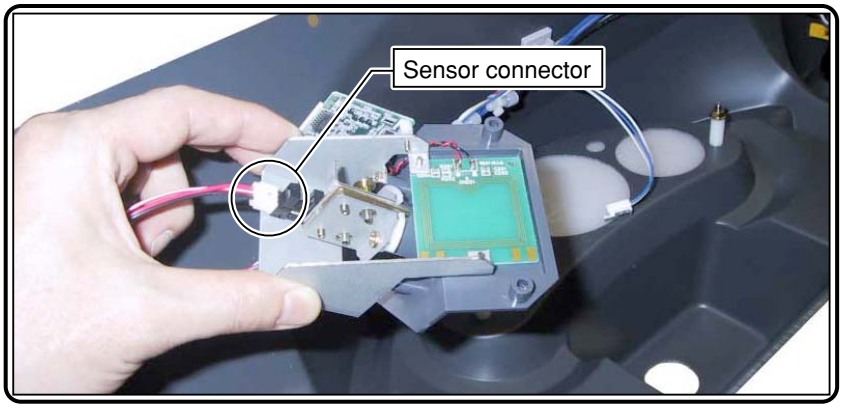

4）Replacement of steering motor PC board assembly

⚠CAUTION

●**Before the replacement work, make sure to turn OFF the power switch.**

1 Turn OFF the power switch and open the rear door B.

2 Remove the steering wheel and dashboard.

3 Remove the four connectors that are connected to the steering motor PC board from the rear door and both sides of the dashboard.

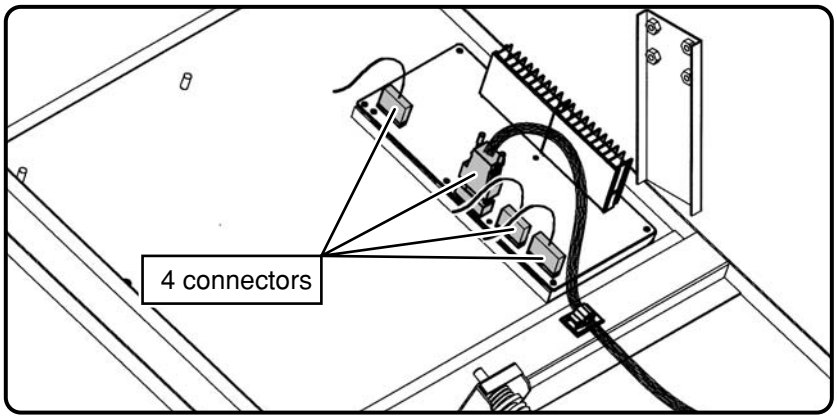

4 Remove the five securing screws and removes the steering motor PC board.
5 Semuth screws (W): M3 x 8

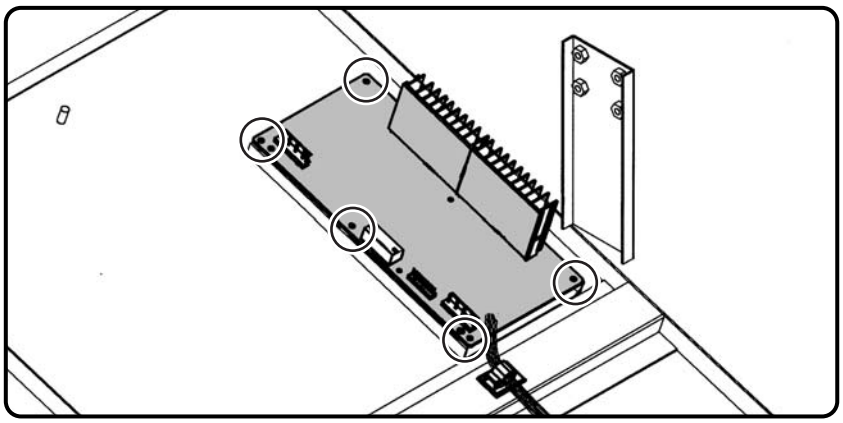

5）Replacement of volume of each pedal assembly

⚠CAUTION

●**Before the replacement work, make sure to turn OFF the power switch.**

■ Removal of each pedal assembly

1 [1] Turn OFF the power switch and open rear door B.
3 Semuth screws (W): M5 x 12.

2 Disconnect the connector of each pedal (X and Z).

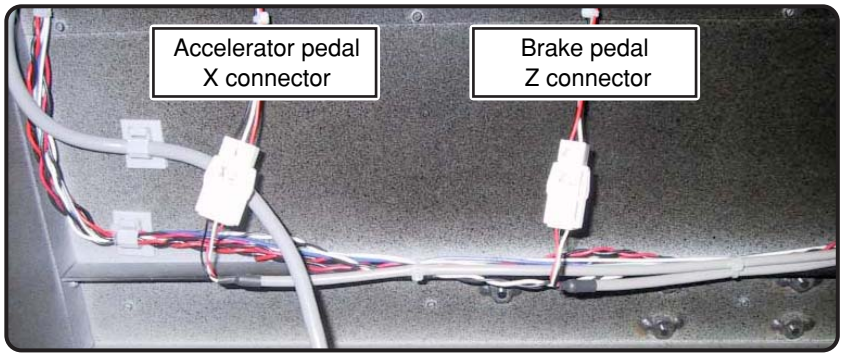

3 Remove securing screws of each assembly and take out the assemblies from the rear door. [Semuth screw (W): M5 x 12]

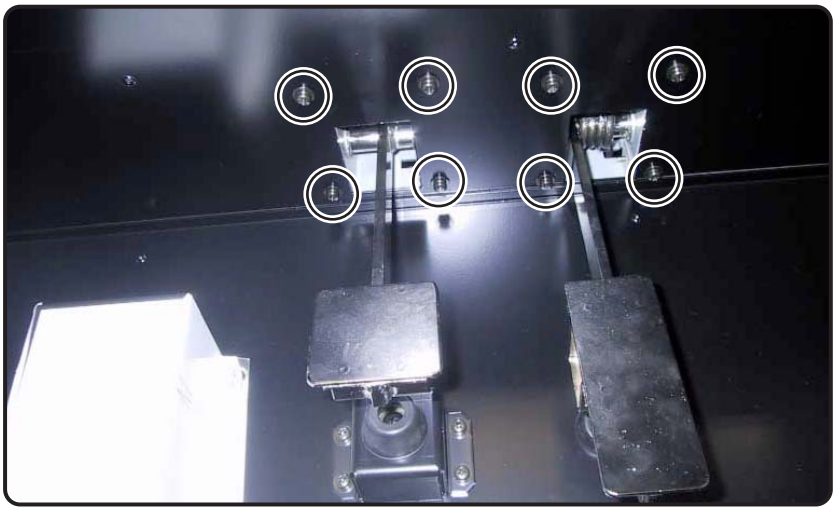

■ Replacement of volume

The volume replacement method is the same for both the brake and accelerator pedals.

1 Disconnect three wires from the volume using a heated solder iron.

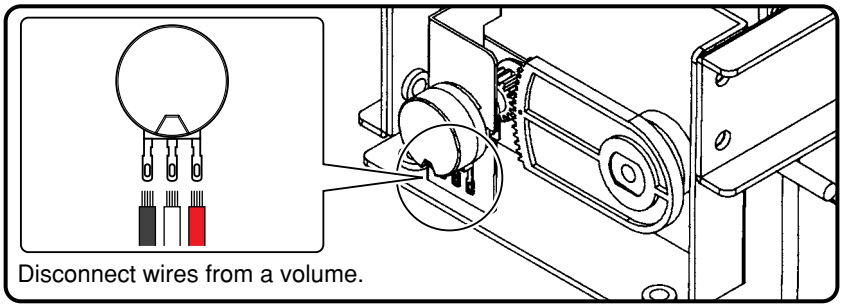

2 Remove the VR bracket (pedal) (Two screws).

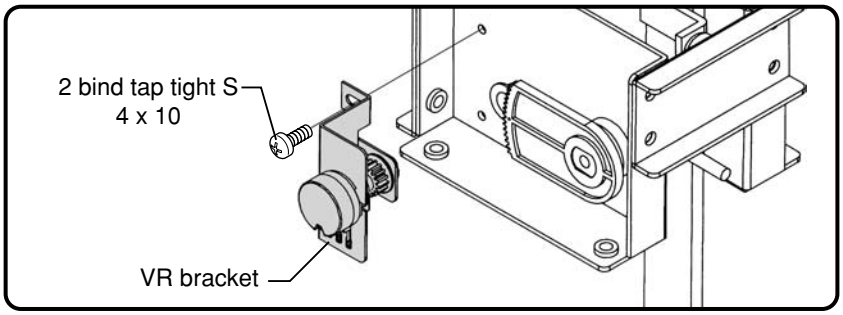

3 Remove the nut and then remove the volume from the VR bracket.
Secure a new volume using a nut. Align a protrusion at the back of the volume with a dent on the VR bracket.

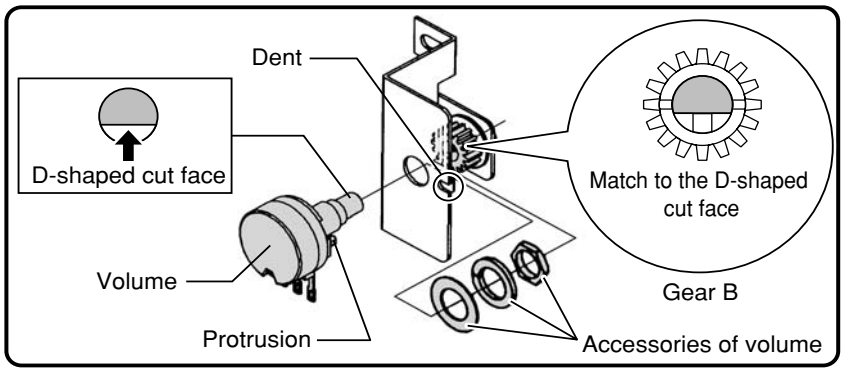

■ Volume
【A21 02541A　VARI.RES.-(5K-B) EWAW1LF20E53】

IMPORTANT

● Do not forget to attach accessories of the volume.

4 Install the VR bracket. Align gear B and gear A with each mark, and be sure to engage the tooth while not pressing too tight.

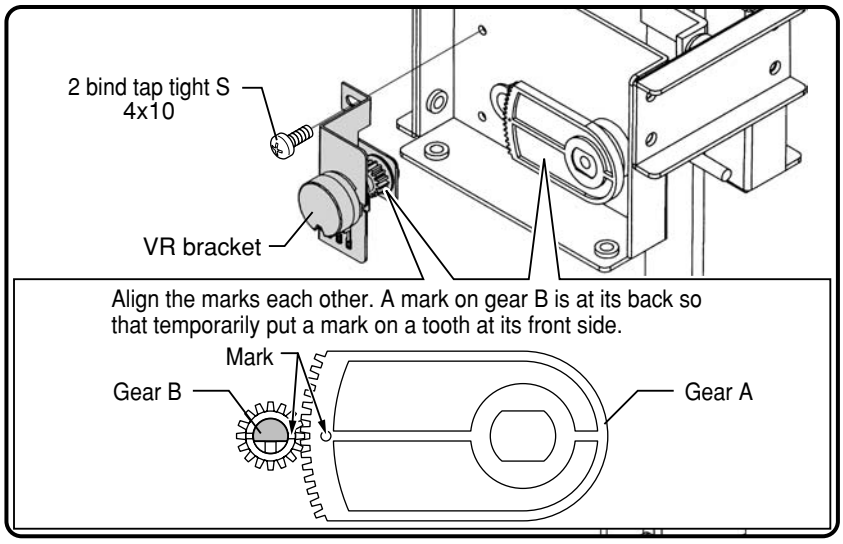

5 Connect the wires on the volume using solder. Be careful not to confuse wire colors.

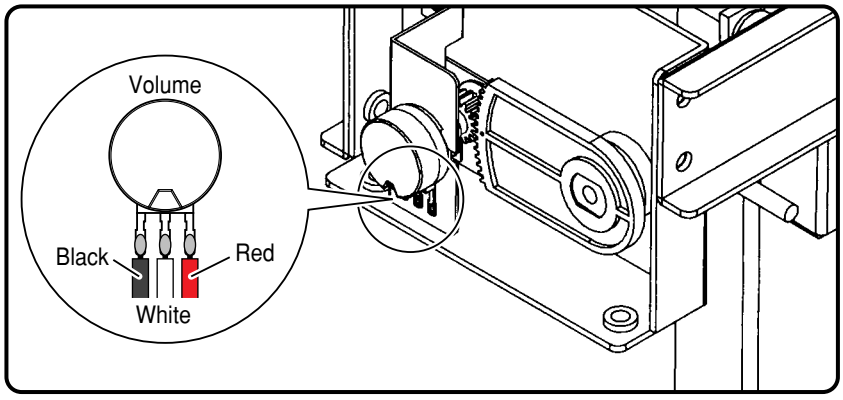

6 Install each pedal assembly to the machine. Apply looseness prevention agent on each screw. Then connect the connectors.

7 Close the rear door B. Three Semuth screws (W): M5 x 12

8 After turning ON the power, execute the adjustment on the test mode. Without the adjustment, the machine cannot play the game normally.

IMPORTANT

- Make sure to execute the adjustment in the test mode after replacing the volumes.

6）Replacement of the hard disk and security dongle

⚠CAUTION

●**Before the replacement work, make sure to turn OFF the power switch.**

■ Removal of shield case assembly

1 Turn OFF the power switch and open rear door B.
3 Semuth screws (W): M5 x 12

2 Remove all the connectors that are connected to the shield case.

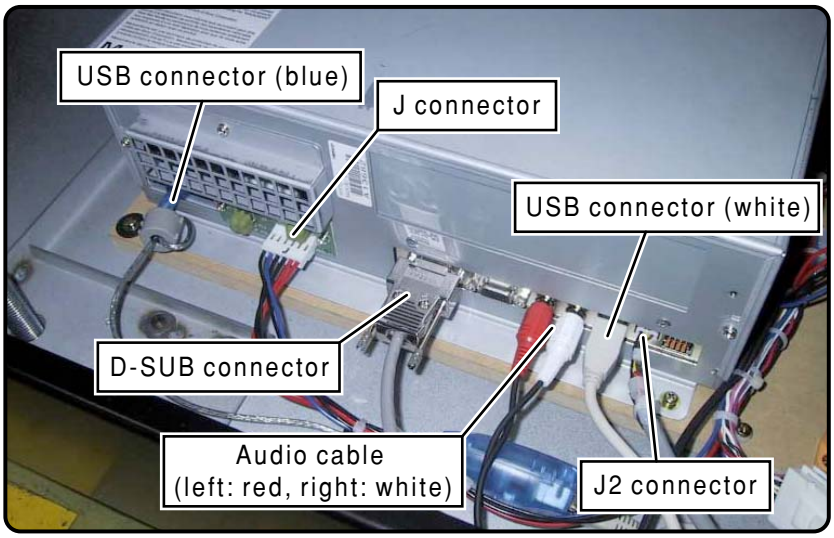

3 Remove the screws that secure the shield case assembly, and remove the shield case assembly. Two Semuth screws (W): M4 x 12

■ Replacement of the security dongle

1 Remove the securing screws of the security dongle cover and replace the security dongle. [One Semuth screw (W): M3 x 6]

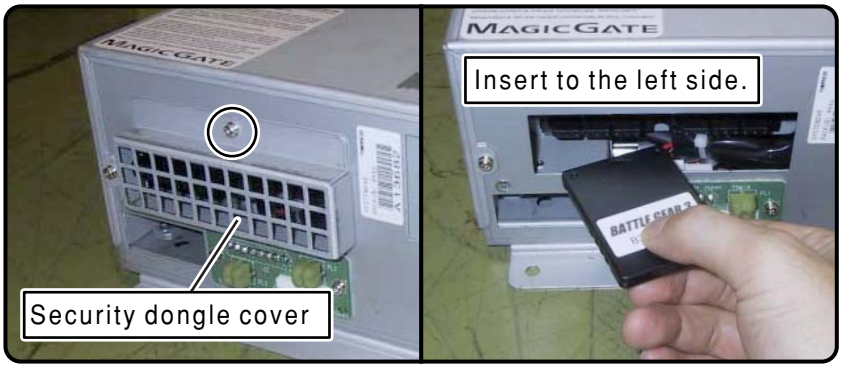

■ Replacement of the hard disk

1 Remove the securing screws of the case cover and open the case cover. [Two Semuth screws (W): M3 x 6]

2 Remove the connectors that are connected to the hard disk.

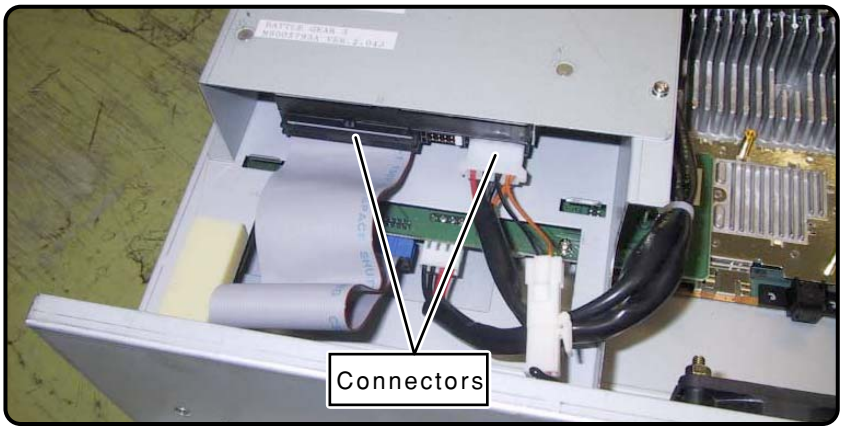

3 Remove the securing screws of the hard disk assembly.
[Four Semuth screws (W): 73 x 6]

4 Remove the hard disk assembly.
After the replacement, install the hard disk with reversing the order of the removal.

CAUTION	**As the hard disk is fragile, do not drop and be careful of handling.**

■ Installation of the shield case assembly

1 Secure the shield case assembly on the PCB base assembly.
Before securing it, connect the USB connector (blue) to the lower connector first.. [Two Semuth screws (W): M4 x 12]

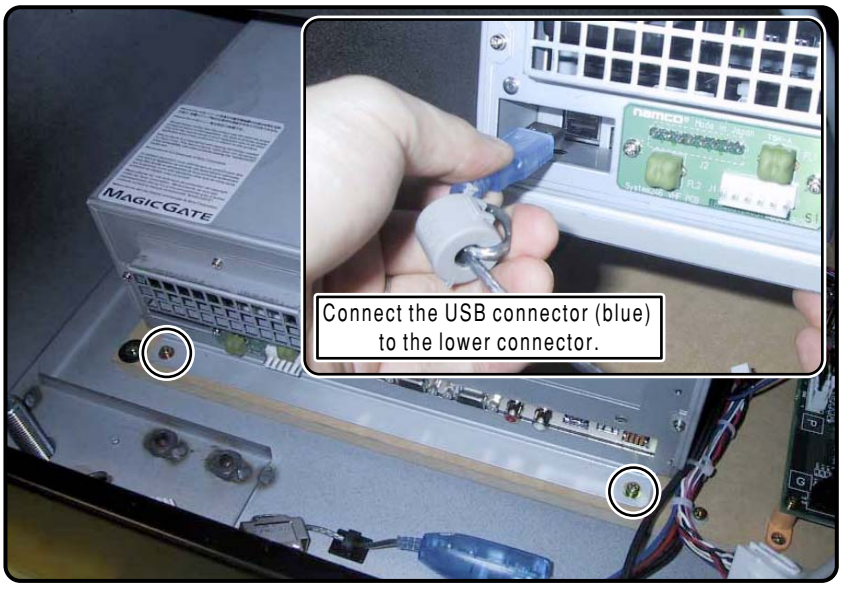

2 Connect the connectors to the shield case assembly.

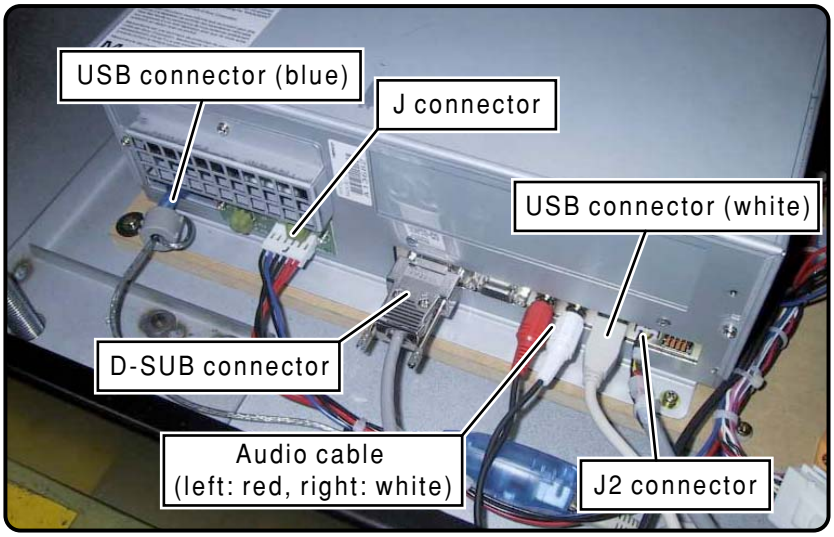

7） Replacement of fuse

⚠CAUTION

●**Before the replacement work, make sure to turn OFF the power switch.**

■ Replacement of the main fuse

1 Turn OFF the power switch and pull the power plug out.

2 Remove the fuse holder cap using a Phillips screwdriver and replace the fuse inside.

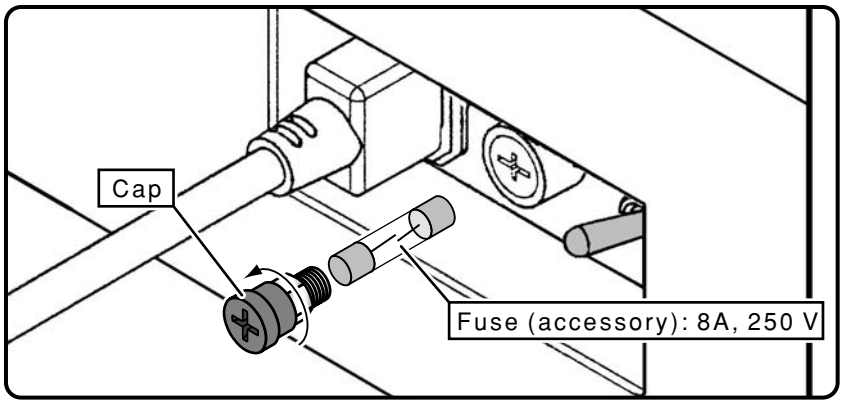

■ Fuse
【C16 00084A　FUSE　8A 250V（6.3x30）】

■ Replacement of amplifier PC board small fuse

1 Turn OFF the power switch and pull the power plug out.

2 Open the rear door B. Three Semuth screws (W): M5 x 12

3 Replace the small fuse (5 A, accessory).

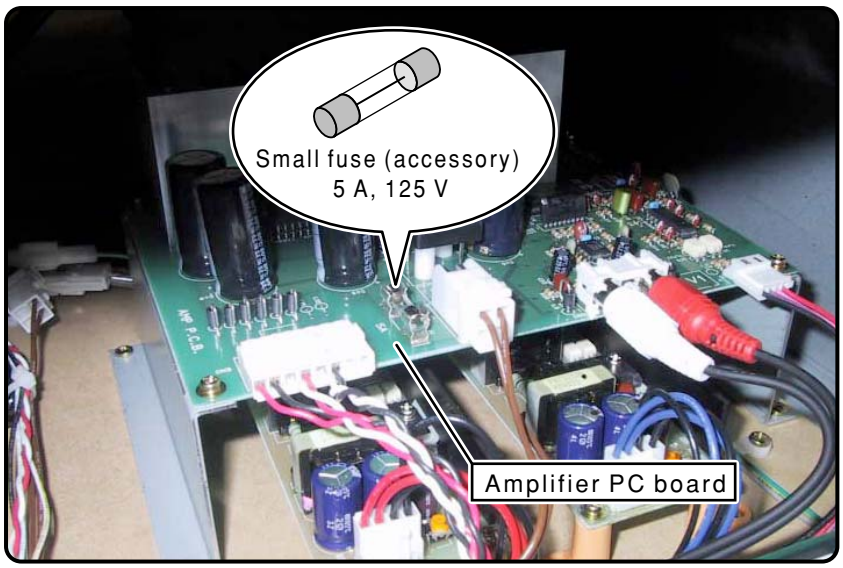

■ Small fuse
【C16 00027A　FUSE　5A 125V（5.2x20）】

Chapter 5: Discarding

■ 5-1. Precautions for machine discarding

When discarding the ｢BATTLE GEAR 3｣ game machine, or the parts used in the machine, the machine owners should handle all of the parts as industrial waste under his/her responsibility.

Packaging material

At delivery, the machine is protected using the packaging materials.
Discard the packaging material following the local garbage classification regulations.

Parts replaced

After replacement, discard the waste parts such as the fluorescent lamp, following the local garbage classification regulations.

Chapter 6: Troubleshooting

■ 6-1. Table of error indications

Error message (screen display)	Symptom/cause	Treatment
HANDLE ERROR	Steering wheel cannot be identified.	・Fault of the steering motor ・Fault of the steering motor PC board ・Faulty connection of the connector
HANDLE ERROR REBOOT!!!	The machine failed to initialize the steering wheel.	・The steering wheel is not in a normal position. After occurrence of this error, the machine automatically resets.
SERVICE ERROR	・Fault of the service switch ・The service switch is kept pressed.	・Check the service switch with the test mode. If the switch does not provide input, replace the switch. (Check input of equipment => See page 50) ・Check service switch status.
ERROR FALSE BACKUP	The backed up data may different from the current version.	Do the adjustment in the test mode.
COIN ERROR	・Fault of the coin switch. ・Clogged coins.	・Check coin switch status with the test mode. If there is no input, replace the coin switch. ・Open the rejecter door and check the rejecter (After occurrence of the error, the machine automatically resets.)
LAN ERROR!!	・More than two machines are connected. ・The LAN cable is disconnected while in match race or during selection	・Configure to two-machine communication. ・Check the LAN cable.

■ 6-2. NESYS troubleshooting

● LED lighting status

	Battle gear 3, machine housing			
	Online lamp			
①	Lights	On line		
	Goes OFF	Off line		
	USB/LAN adapter			
	Link/Act LED			
②	Blinks	System 246 is communicating with the LAN.		
	Lights	System 246 can communicate with the LAN.		
	Goes OFF	System 246 disconnects from the LAN.		
	HUB			
	Link/Receive LED			
③	Blinks	Communicating		
	Lights	Possible to communicate		
	Goes OFF	Possible to communicate		

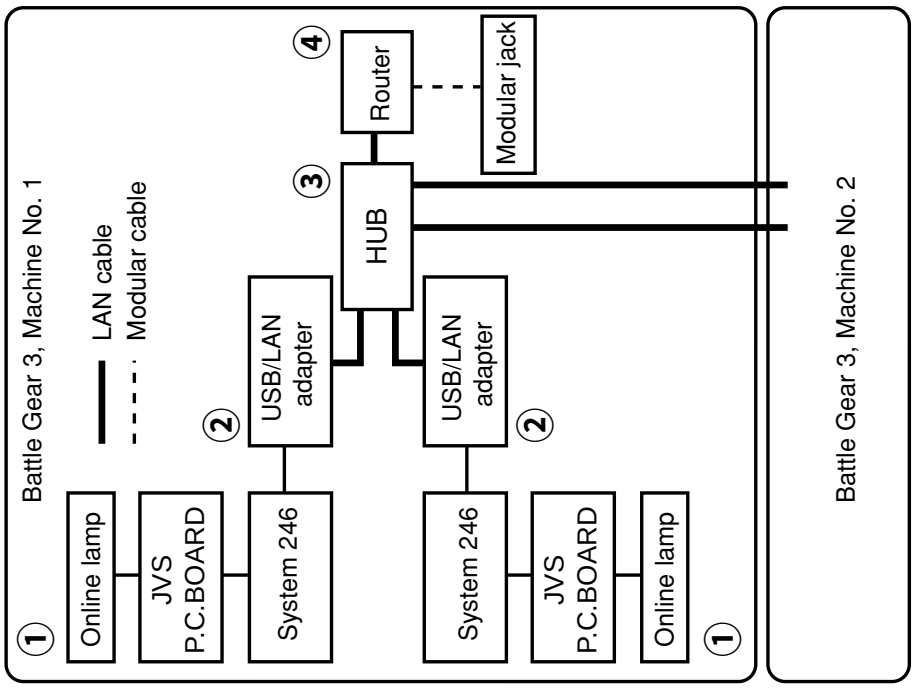

■ 6-3. Troubleshooting

Trouble	Possible causes	Treatment
The machine does not start after turning ON the power switch.	・The power plug is not inserted into a power outlet. ・Fuse 8A is blown.	・Check the power plug and turn ON the power. ・Replace fuse 8A. (Replacement of the fuse => Page 76)
Cannot hear the sound	・Improper sound loudness level.	・Changes sound loudness volume in the test mode. (Sound test => Page 52)
Operation of the brake pedal and accelerator pedal does not match the game operation.	・Deviation of adjustment position on the operation system.	・Do the adjustment in the test mode and readjust. (Adjustment => Page 52)
Color display on the monitor screen is partly abnormal. **Monitor screen image deviates or is deformed.**	・The monitor may be gauzed. ・Monitor adjustment is not appropriate.	・Press the degaussing switch on the central control in the rejecter door. (Hue adjustment => Page 61) ・Adjust using the monitor adjuster in the rejecter door. (Adjustment of monitor screen => Page 60)
The title section is dark. **The switch lamp does not light (start, view change, or hazard lamp).**	・Life over of the fluorescent lamp. ・Life over of the switch lamp.	・Replace the fluorescent lamp or glow lamp. (Replacement of fluorescent lamp => Page 62) ・Replace the switch lamp. (Replacement of the wedge lamp => Page 64)
Unable to operate brake or accelerator pedal	・Fault of each operation volume system.	・After replacing the volume, do the adjustment operation. (Volume replacement of each pedal assembly => Page 69) (Adjustment => Page 52)
Unable to read an entry key	・Fault of the cylinder mechanism. ・Fault of the entry key	・Replace the cylinder mechanical assembly. ・Replace the entry key.
An error message is displayed.		・See the error indication table. (Table of error indications => Page 79.)

NOTE

PARTS CATALOG

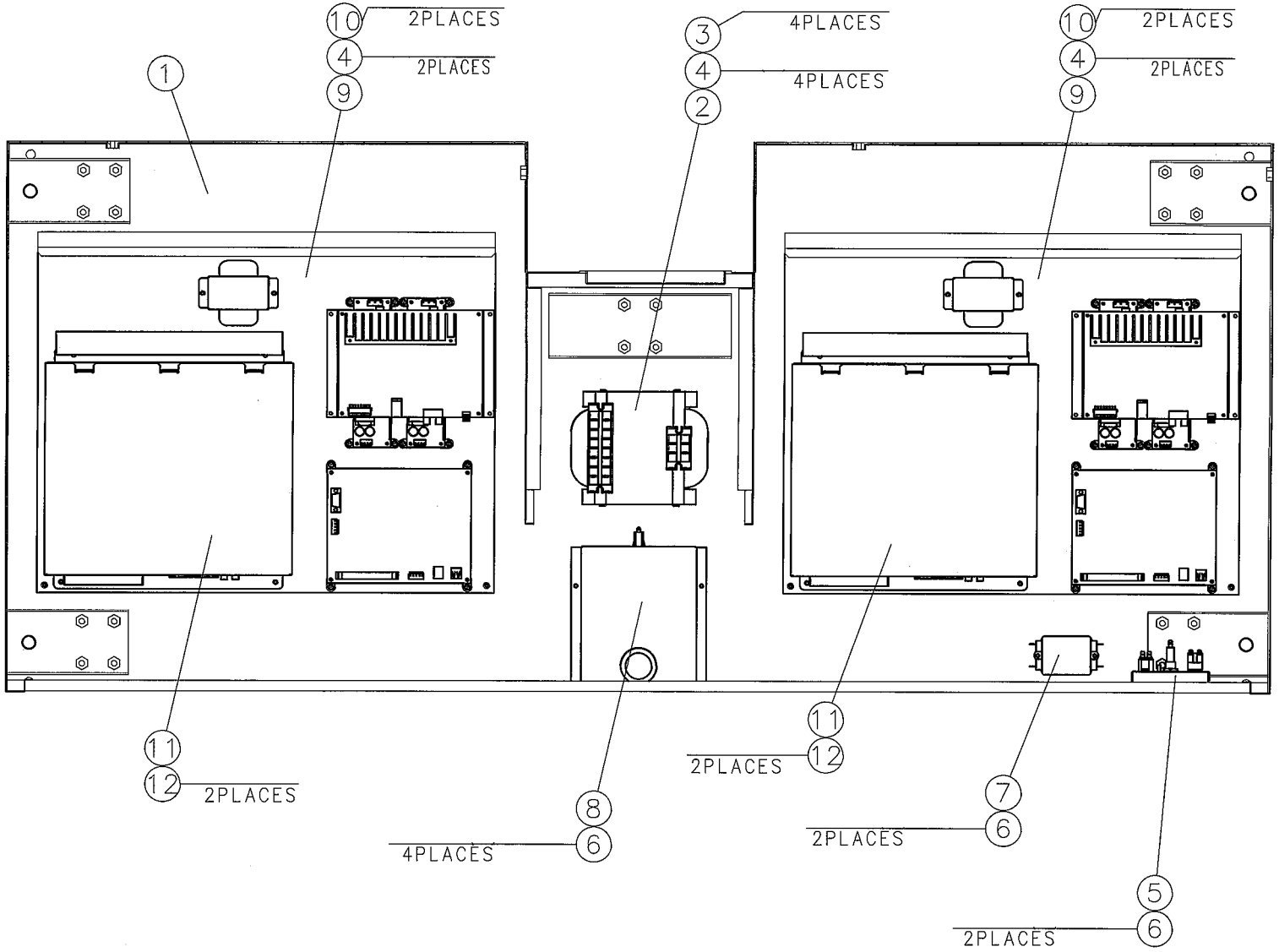

PARTS LIST			
No	PARTS No.	PARTS LIST	QTY
1	E3100636A	VIDEO CABINET-(WITH PARTS)	1
2	C1000486A	MULTI TRANSFORMER ISOLATION TYPE 100V 8A	1
3		WASHER HD TAP TIGHT-S-(CHROMATE) 4X10	4
4		PLAIN WASHER-(BLACK CHROMATE) 4.5X18X1.6T	8
5	M9005851A	SWITCH BOX ASSY (C)	1
6		TRUSS HD TAP TIGHT-S-<BLACK CHROMATE> 4X10	8
7	C1800059A	NOISE FILTER 250V 10A SUP-E10H-EPR-0	1
8	M9005794A	HUB BOX ASSY	1
9	M9005795A	PCB BASE ASSY	2
10		WASHER HD TAP TIGHT-S-(CHROMATE) 4X20	4
11	M9006059A	SHIELD CASE & HARD DISK ASSY	2
12		PAN HD SEMUTH SCREW-W-(CHROMATE) M4X12	4
13			
14			
15			
16			
17			
18			
19			
20			
21			
22			
23			
24			
25			

NOTE

TITLE VIDEO CABINET ASSY-(1.7R)-(WITH ALARM)

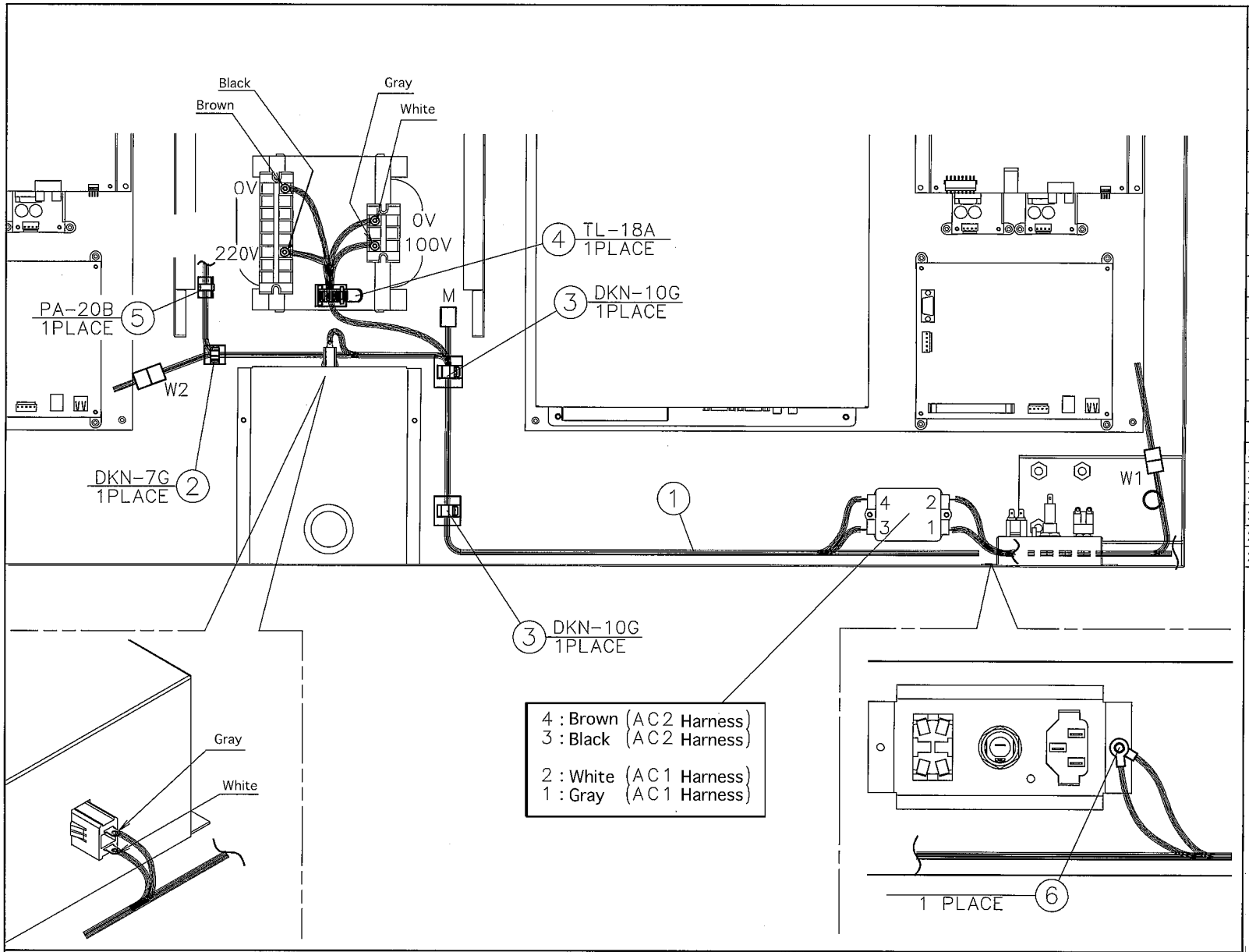

PARTS LIST			
No	PARTS No.	PARTS LIST	QTY
1	L9004820A	AC 2 HARNESS	1
2	F0100070A	DK CRAMP-(24X19) DKN-7G	1
3	F0100071A	DK CRAMP-(30X21) DKN-10G	2
4	F0100068A	TL CRAMP TL-18A	1
5	F0100064A	PA CRAMP PA-20B	1
6		FLANGE NUT-(CHROMATE) M4	1
7			
8			
9			
10			
11			
12			
13			
14			
15			
16			
17			
18			
19			
20			
21			
22			
23			
24			
25			

NOTE

TITLE VIDEO CABINET ASSY-(1.7R)-(WITH ALARM)

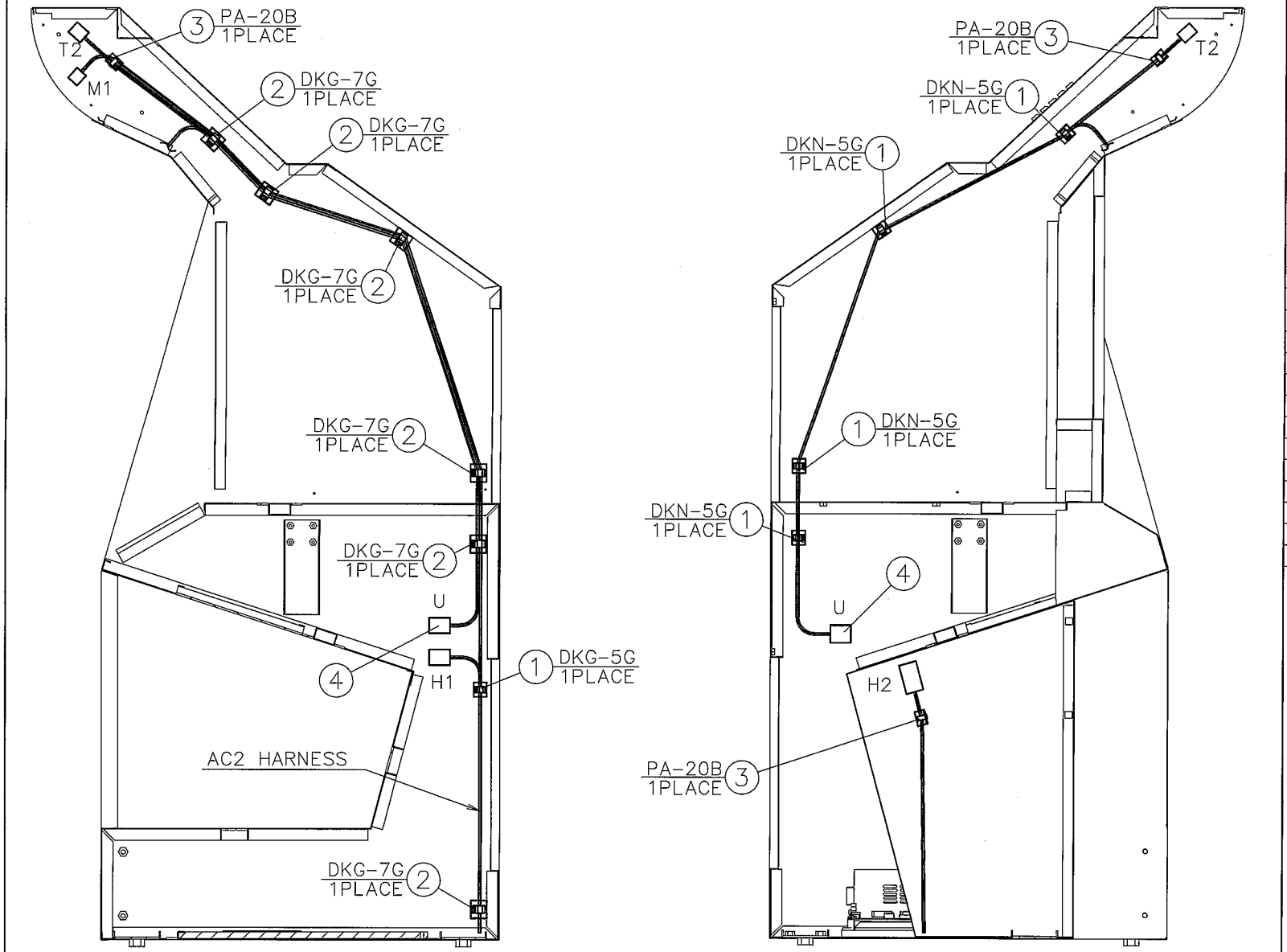

PARTS LIST			
No	PARTS No.	PARTS LIST	QTY
1	F0100069A	DK CRAMP-(17.5X19) DKN-5G	5
2	F0100070A	DK CRAMP-(24X19) DKN-7G	6
3	F0100064A	PA CRAMP PA-20B	3
4	L9004823A	CABINET HARNESS	2
5			
6			
7			
8			
9			
10			
11			
12			
13			
14			
15			
16			
17			
18			
19			
20			
21			
22			
23			
24			
25			

NOTE

TITLE VIDEO CABINET ASSY-(1.7R)-(WITH ALARM)

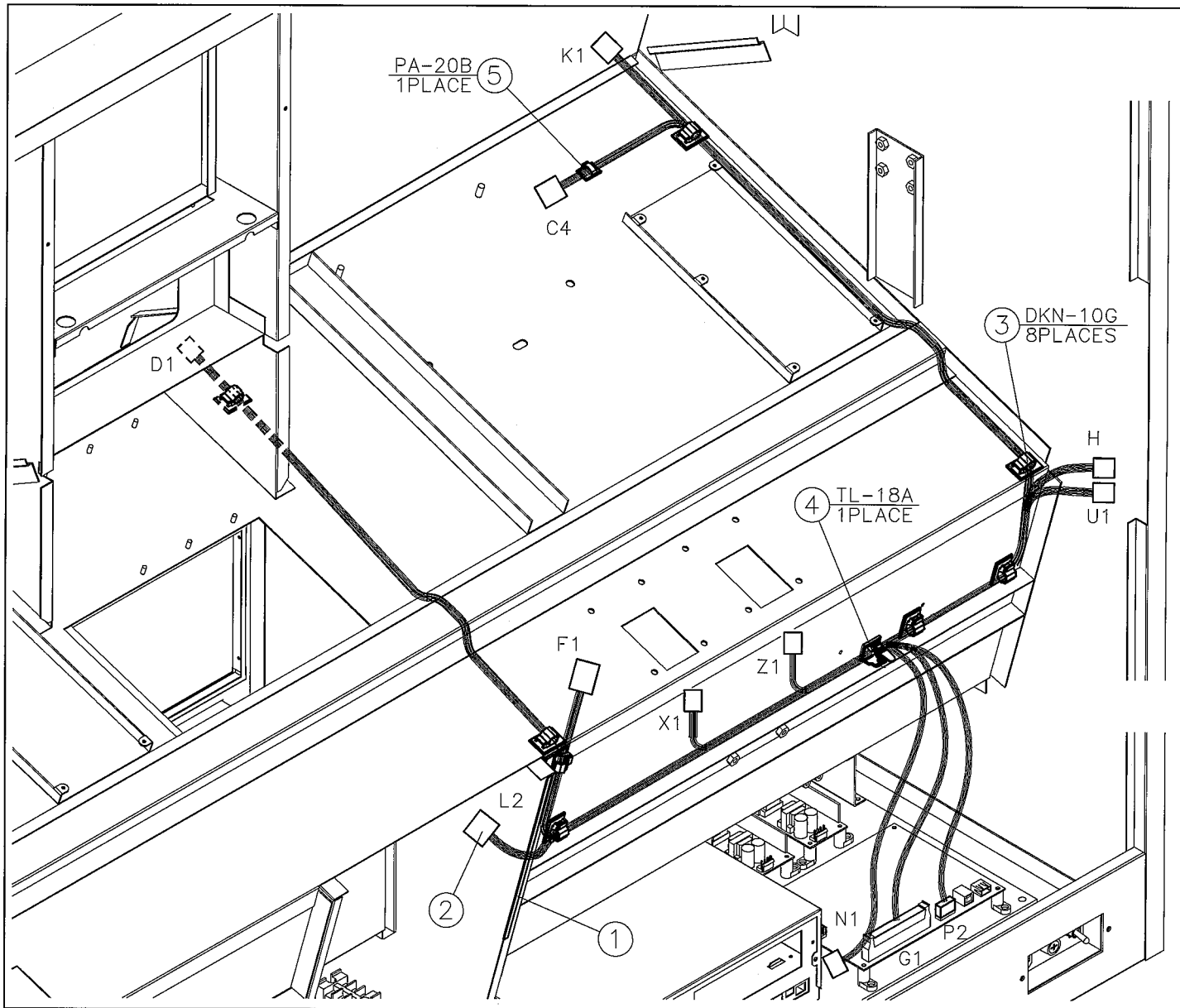

PARTS LIST			
No	PARTS No.	PARTS LIST	QTY
1	F9005147A	NYLON GROMMET GEE62F-A-C	0.2
2	L1000385A	MAIN L HARNESS	1
3	F0100071A	DK CRAMP-(30X21) DKN-10G	8
4	F0100068A	TL CRAMP TL-18A	1
5	F0100064A	PA CRAMP PA-20B	1
6			
7			
8			
9			
10			
11			
12			
13			
14			
15			
16			
17			
18			
19			
20			
21			
22			
23			
24			
25			

NOTE

TITLE VIDEO CABINET ASSY-(1.7R)-(WITH ALARM)

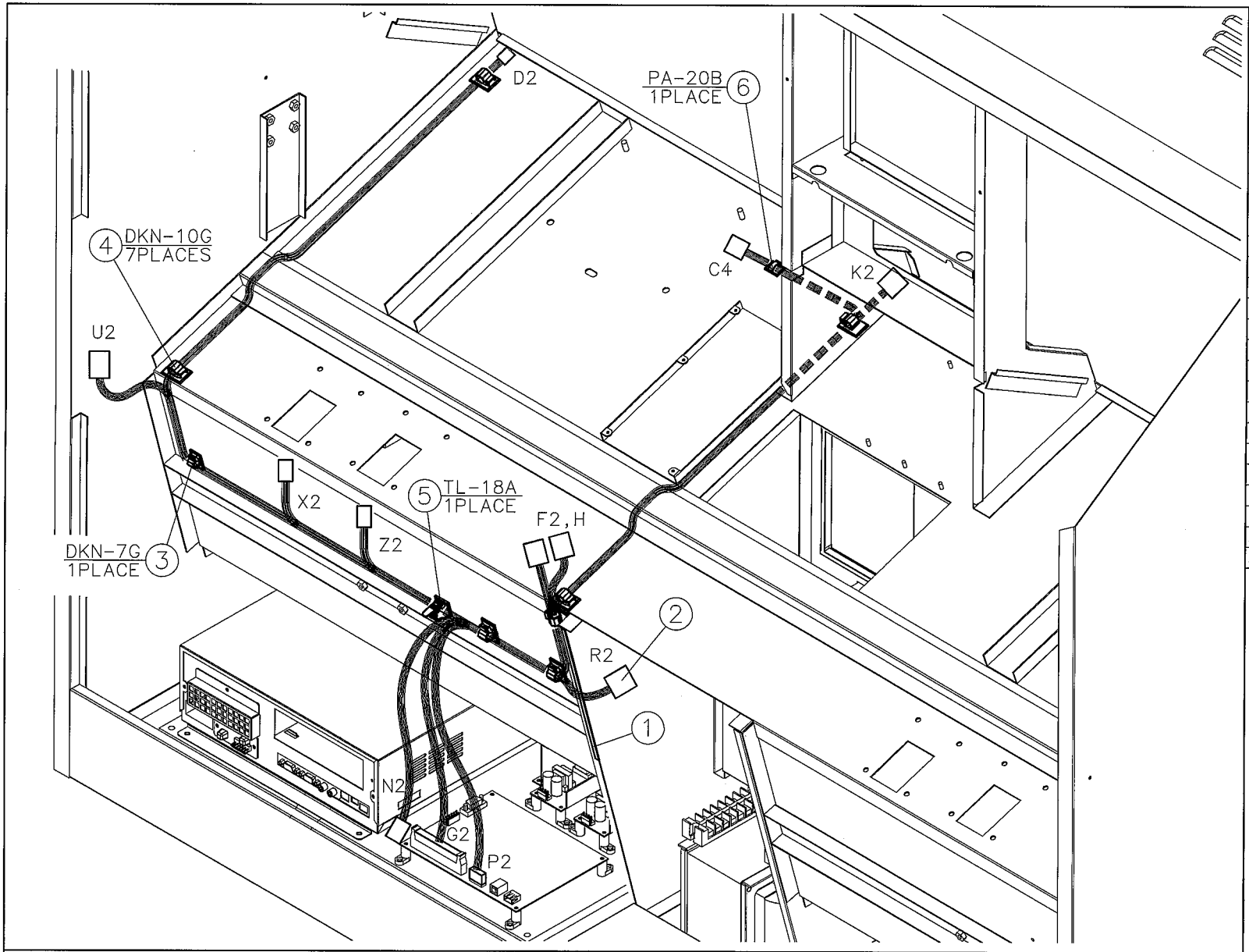

PARTS LIST			
No	PARTS No.	PARTS LIST	QTY
1	F9005147A	NYLON GROMMET GEE62F-A-C	0.2
2	L1000386A	MAIN R HARNESS	1
3	F0100070A	DK CRAMP-(24X19) DKN-7G	1
4	F0100071A	DK CRAMP-(30X21) DKN-10G	7
5	F0100068A	TL CRAMP TL-18A	1
6	F0100064A	PA CRAMP PA-20B	1
7			
8			
9			
10			
11			
12			
13			
14			
15			
16			
17			
18			
19			
20			
21			
22			
23			
24			
25			

NOTE

TITLE VIDEO CABINET ASSY-(1.7R)-(WITH ALARM)

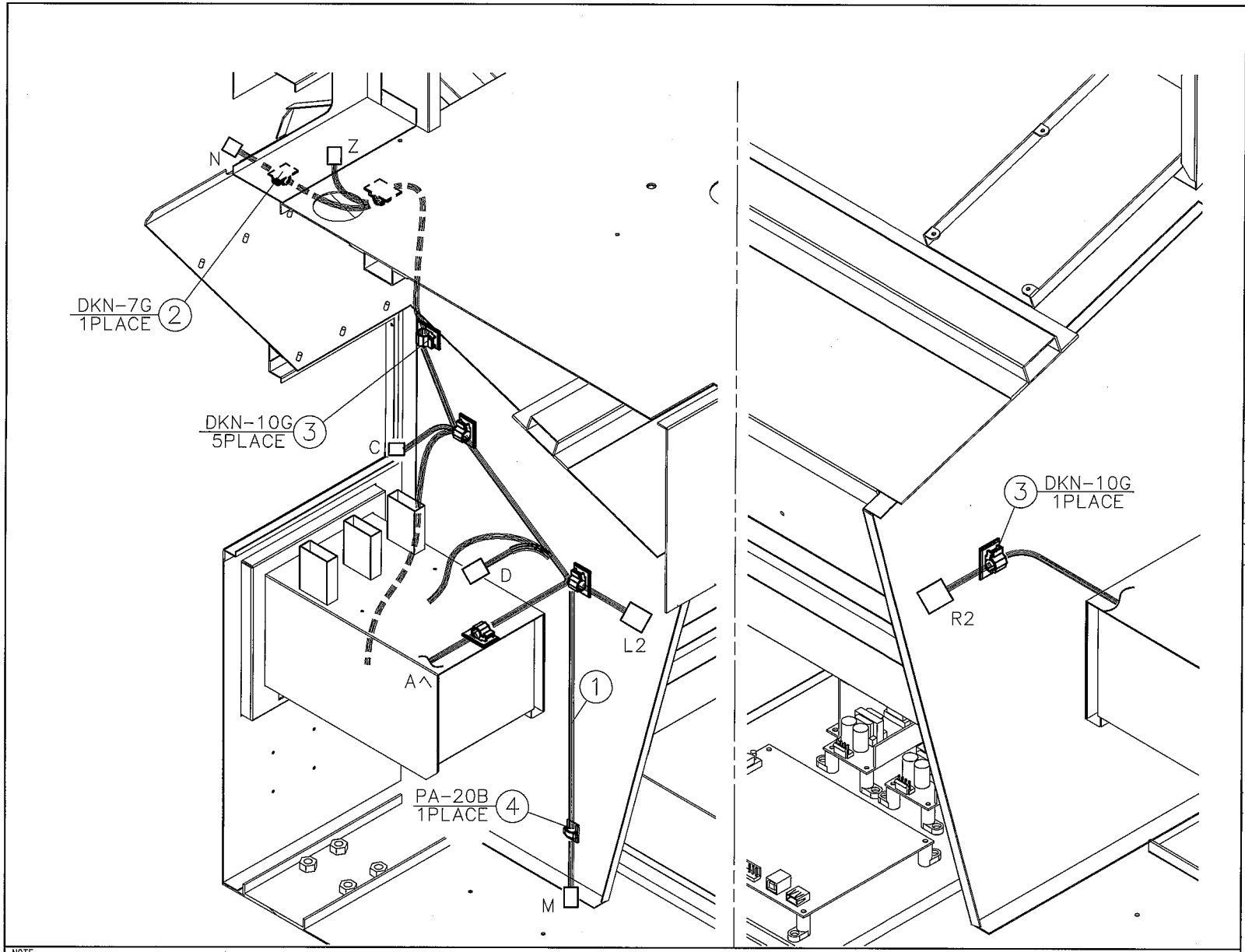

PARTS LIST

No	PARTS No.	PARTS LIST	QTY
1	L9004824A	CENTER HARNESS	1
2	F0100070A	DK CRAMP-(24X19) DKN-7G	1
3	F0100071A	DK CRAMP-(30X21) DKN-10G	6
4	F0100064A	PA CRAMP PA-20B	1
5			
6			
7			
8			
9			
10			
11			
12			
13			
14			
15			
16			
17			
18			
19			
20			
21			
22			
23			
24			
25			

NOTE

TITLE VIDEO CABINET ASSY-(1.7R)-(WITH ALARM)

通信ケーブル配線図

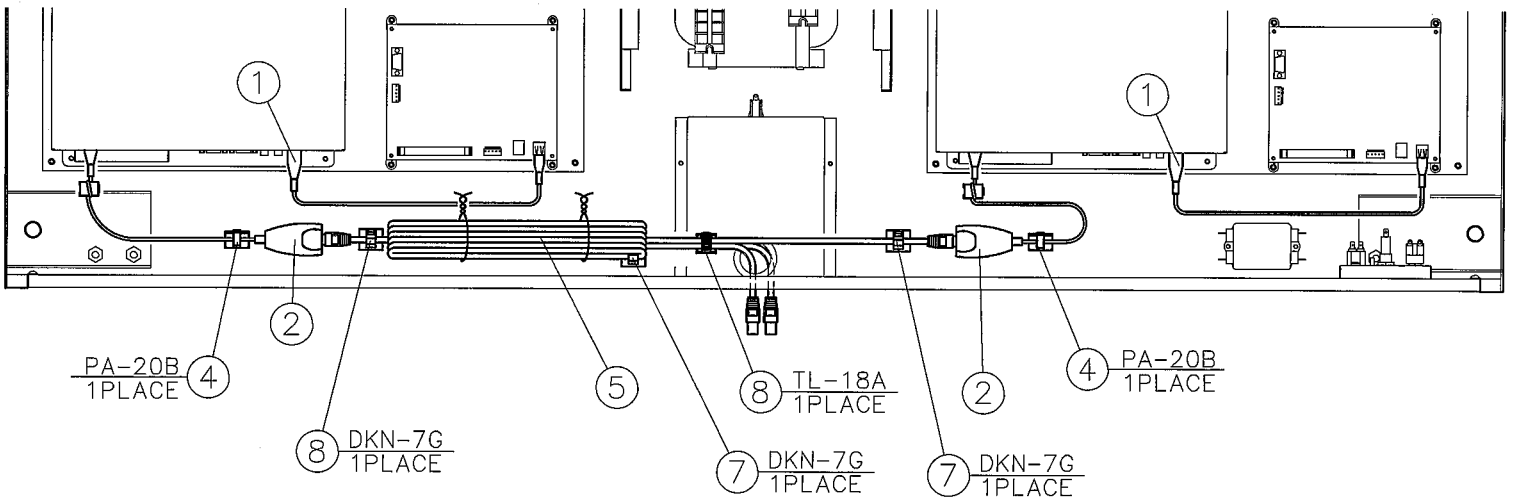

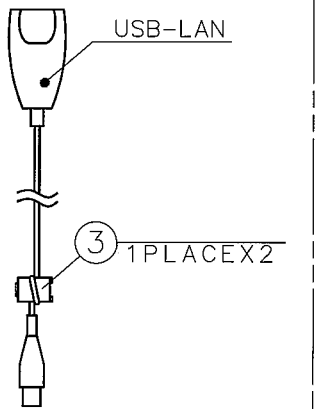

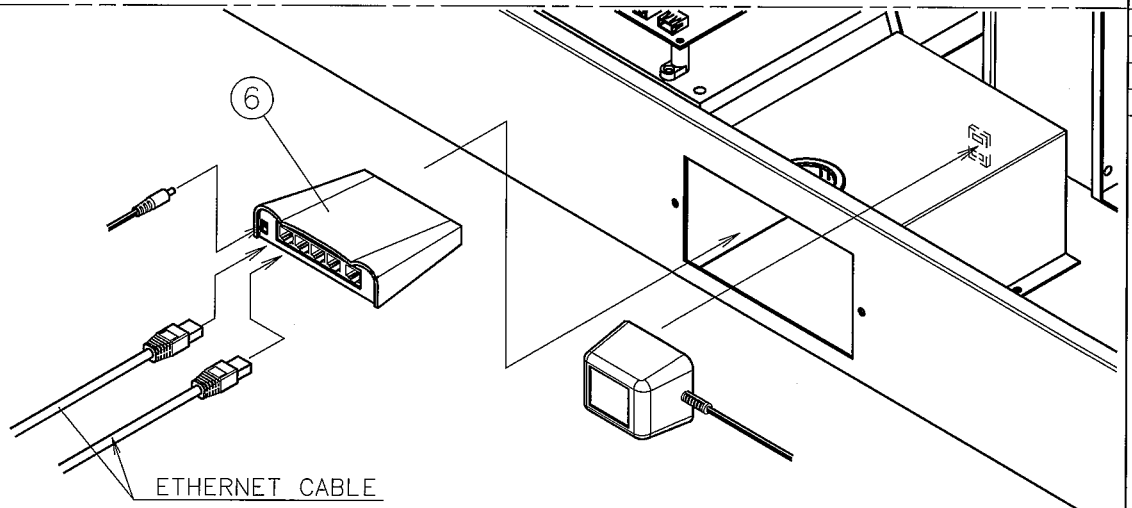

PARTS LIST			
No	PARTS No.	PARTS LIST	QTY
1	L9004815A	USB CABLE-(AB)-(0.45M)	2
2	M1000290A	USB-LAN I/F USB-ET/TX-S	2
3	C1101430A	FERRITE CORE MTFC16813EA	2
4	F0100064A	PA CRAMP PA-20B	2
5	L9004816A	ETHERNET CABLE-(STRAIGHT)-(3.0M)	2
6	M1000289A	HUB-(10BASE-T 5PORT RJ45) CG-HUB5PMW	1
7	F0100070A	DK CRAMP-(24X19) DKN-7G	3
8	F0100068A	TL CRAMP TL-18A	1
9			
10			
11			
12			
13			
14			
15			
16			
17			
18			
19			
20			
21			
22			
23			
24			
25			

NOTE

TITLE VIDEO CABINET ASSY-(1.7R)-(WITH ALARM)

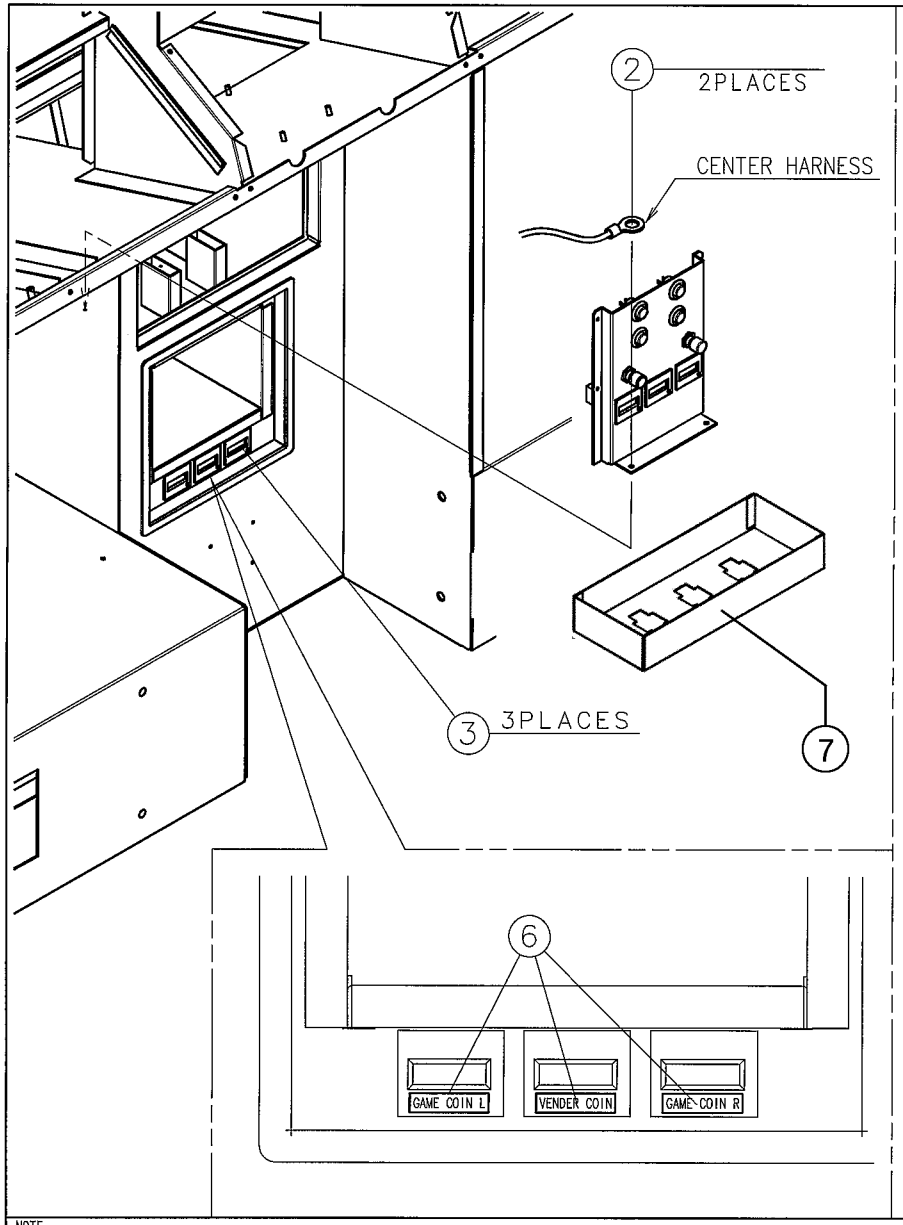

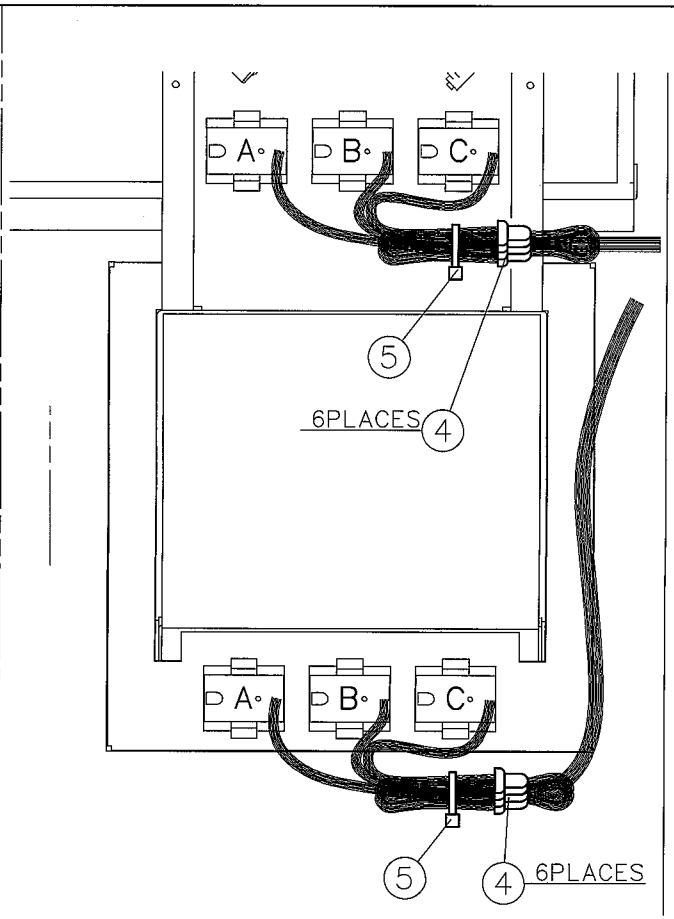

Harness	Counter A	Counter B	Counter C
White — Green	— White		
Blue	— Black		
White — Purple		— White	
Blue		— Black	
White — Orenge			White
Blue			Black

PARTS LIST

No	PARTS No.	PARTS LIST	QTY
1	M9005786A	CENTRAL CONTROL ASSY	1
2		WASHER HD TAP TIGHT-S-(CHROMATE) 3X8	2
3	C1700065A	COUNTER-(DC12V) MZ-670-115	3
4	C0601005A	TERMINAL & CONNECTOR-S-(12A) CE-2	12
5	F0100028A	CONVEX-(CV-100) SKB-100	2
6	G1502037A	METER STICKER SHEET	1
7	F9005878A	OVERFLOW COVER	1
8			
9			
10			
11			
12			
13			
14			
15			
16			
17			
18			
19			
20			
21			
22			
23			
24			
25			

NOTE

TITLE VIDEO CABINET ASSY-(1.7R)-(WITH ALARM)

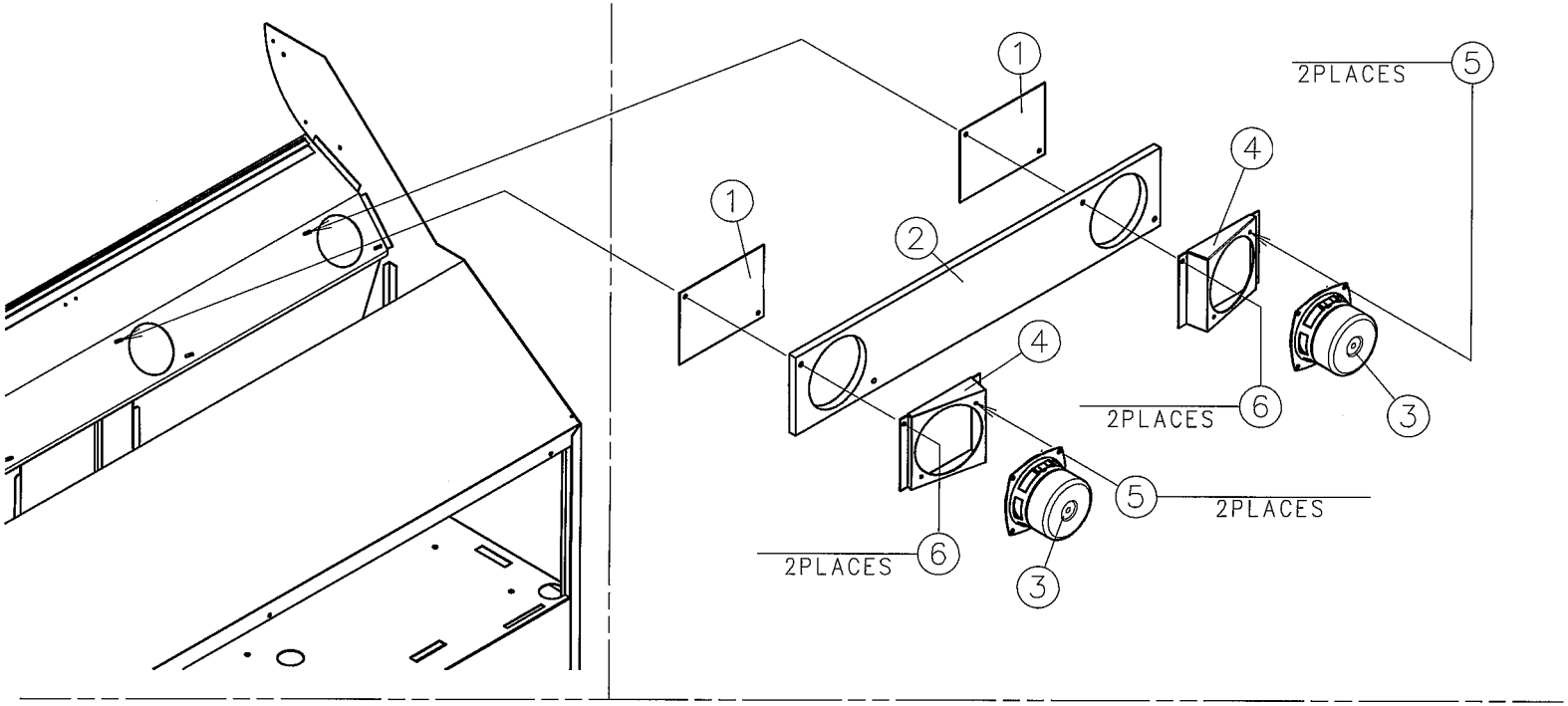

CABINET HARNESS

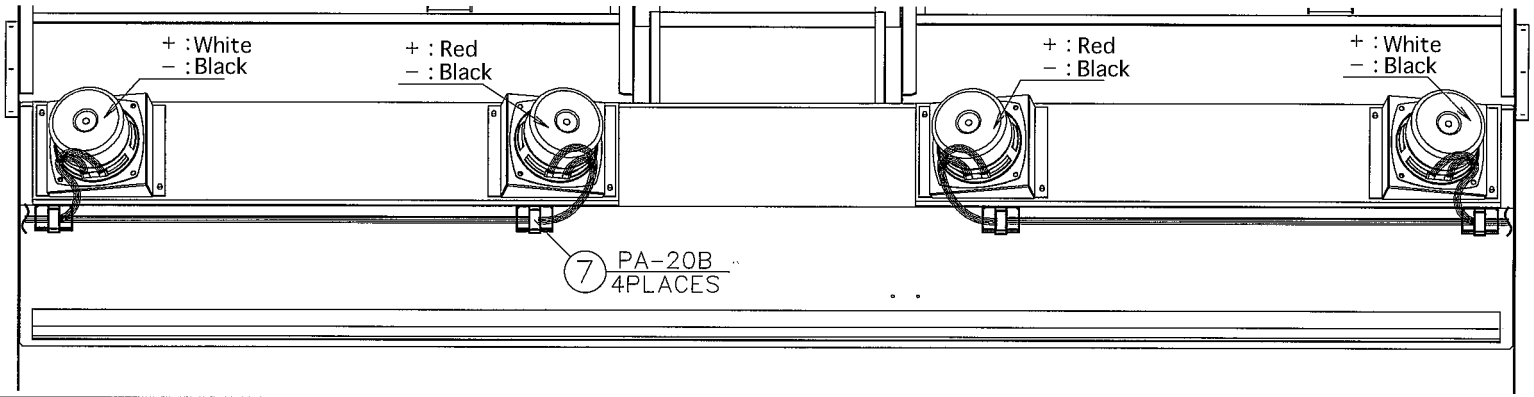

PARTS LIST			
No	PARTS No.	PARTS LIST	QTY
1	E3100629A	SPEAKER PLATE	4
2	D2001850A	SPEAKER BOARD	2
3	A6000134A	SPEAKER-(4 OHM 25W)-(10CM) F100A189-1	4
4	E3016564A	SPEAKER BRACKET	4
5		WASHER HD TAP TIGHT-S-(CHROMATE) 4X10	8
6		FLANGE NUT-(CHROMATE) M4	8
7	F0100064A	PA CRAMP PA-20B	4
8			
9			
10			
11			
12			
13			
14			
15			
16			
17			
18			
19			
20			
21			
22			
23			
24			
25			

NOTE

TITLE VIDEO CABINET ASSY-(1.7R)-(WITH ALARM)

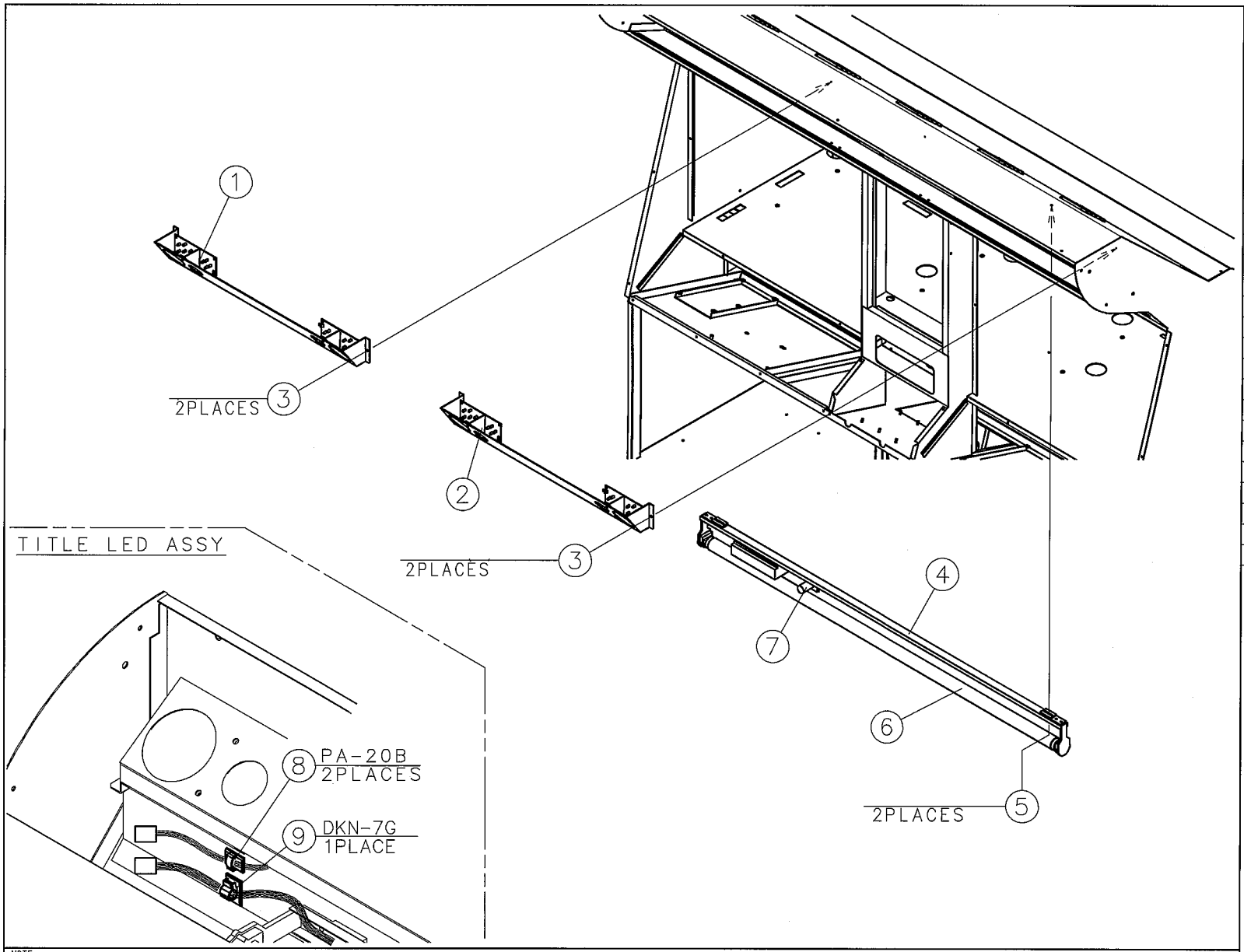

PARTS LIST

No	PARTS No.	PARTS LIST	QTY
1	M9005799A	TITLE LED ASSY-L	1
2	M9005800A	TITLE LED ASSY-R	1
3		TRUSS HD TAP TIGHT-S-<BLACK CHROMATE> 4X10	4
4	M1000225A	FL UNIT-(40W)-(50HZ) HLK-405GL-T CNfst	1
5		WASHER HD TAP TIGHT-S-(CHROMATE) 4X20	2
6	C1400102A	GLOW LAMP FG-4P	1
7	C1500046A	FL LAMP-(40W) FL40SD	1
8	F0100064A	PA CRAMP PA-20B	2
9	F0100070A	DK CRAMP-(24X19) DKN-7G	1
10			
11			
12			
13			
14			
15			
16			
17			
18			
19			
20			
21			
22			
23			
24			
25			

NOTE

TITLE VIDEO CABINET ASSY-(1.7R)-(WITH ALARM)

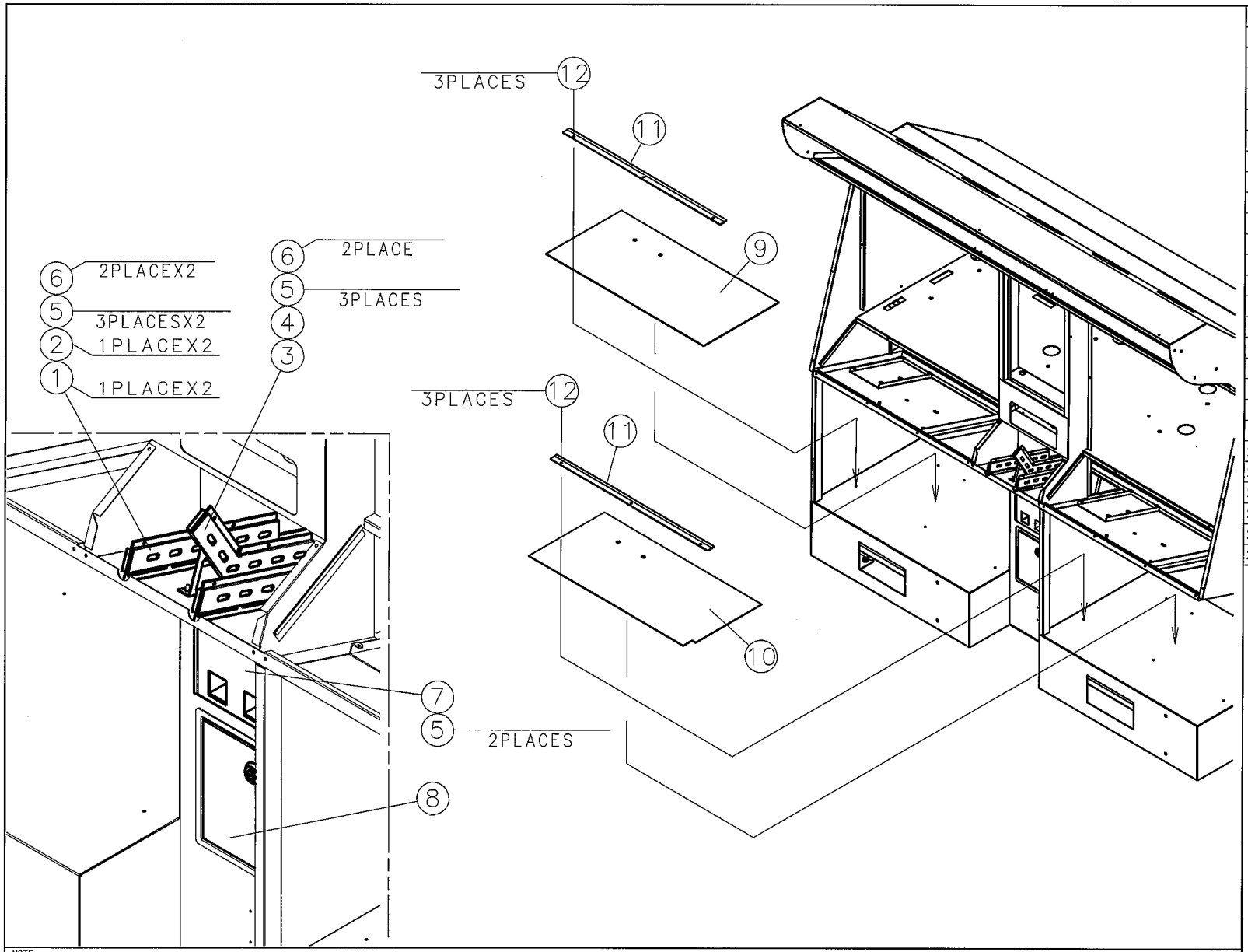

PARTS LIST			
No	PARTS No.	PARTS LIST	QTY
1	E3016540A	COIN CHUTE-A-L	2
2	E3016541A	COIN CHUTE-A-R	2
3	E3016675A	COIN CHUTE-B-L-(HK5$)	1
4	E3016676A	COIN CHUTE-B-R-(HK5$)	1
5		WASHER HD TAP TIGHT-S-(CHROMATE) 3X8	11
6		FLANGE NUT-(CHROMATE) M4	6
7	M0500381A	REJECTOR DOOR ASSY-(HK)	1
8	M0400138A	CASH BOX ASSY	1
9	F9005791A	FLOOR MAT-L	1
10	F9005792A	FLOOR MAT-R	1
11	E3100624A	MAT HOLDER	2
12		TRUSS HD TAP TIGHT-S-<CHROME> 4X10	6
13			
14			
15			
16			
17			
18			
19			
20			
21			
22			
23			
24			
25			

NOTE

TITLE VIDEO CABINET ASSY-(1.7R)-(WITH ALARM)

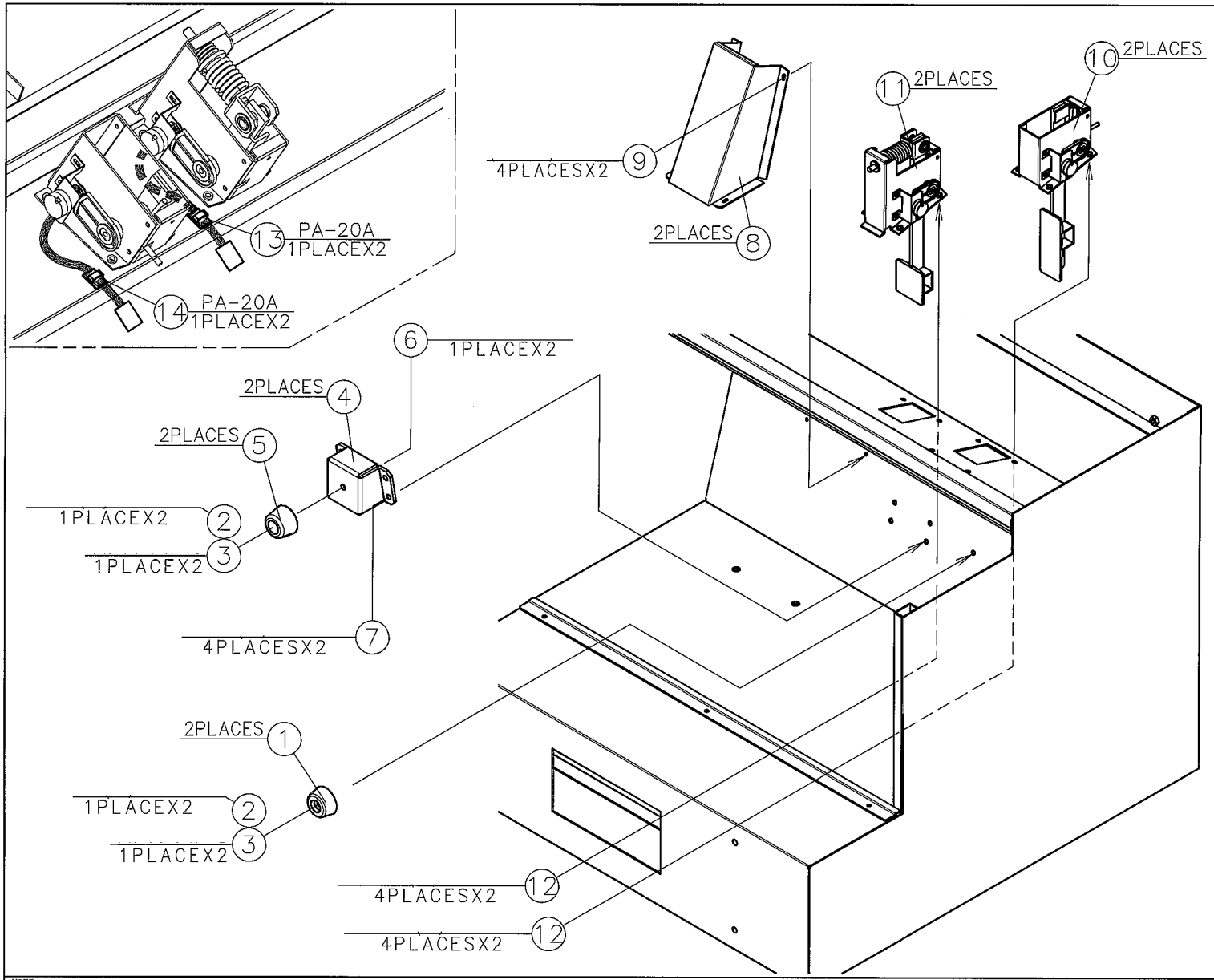

PARTS LIST			
No	PARTS No.	PARTS LIST	QTY
1	F3000027A	RUBBER LEG C-30-RK-3215	2
2		TRUSS HD SCREW-<BLACK CHROMATE> M5X20	4
3		SPRING WASHER-(CHROMATE) 5	4
4	E3014299A	B STOPPER BASE	2
5	F3000047A	RUBBER LEG K-3220	2
6		SELF LOCKING NUT-U-(UNICHRO) M5	2
7		PAN HD SEMUTH SCREW-W-<BLACK CHROMATE> M5X16	8
8	E3100622A	FOOT REST	2
9		TRUSS HD TAP TIGHT-S-<CHROME> 4X10	8
10	M0100275A	ACCEL PEDAL ASSY	2
11	M0100276A	BRAKE PEDAL ASSY	2
12		PAN HD SEMUTH SCREW-W-<BLACK CHROMATE> M5X12	16
13	F0100064A	PA CRAMP PA-20B	4
14			
15			
16			
17			
18			
19			
20			
21			
22			
23			
24			
25			

NOTE

TITLE VIDEO CABINET ASSY-(1.7R)-(WITH ALARM)

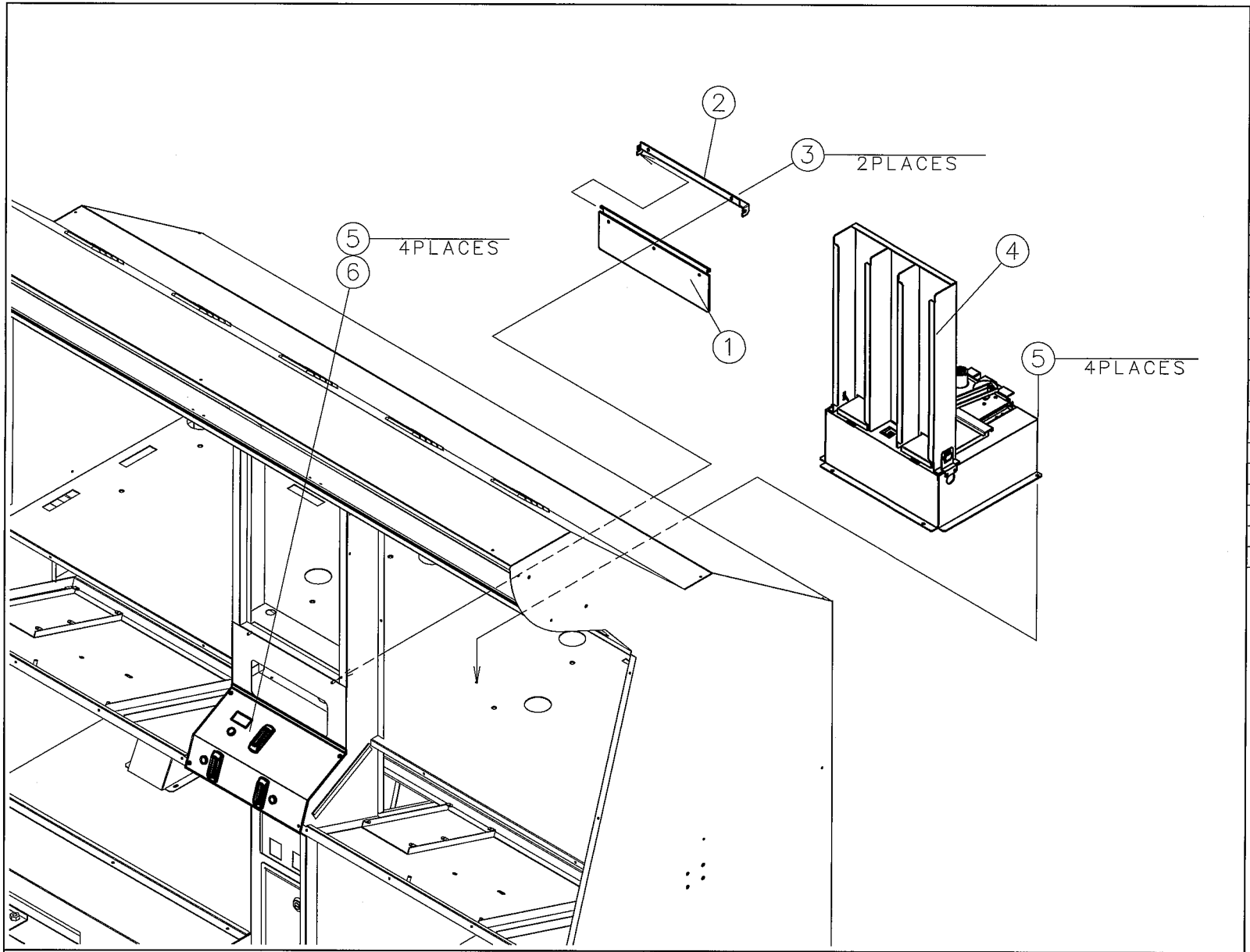

PARTS LIST			
No	PARTS No.	PARTS LIST	QTY
1	H9000689A	SHUTTER	1
2	E3016560A	SHUTTER BRACKET	1
3		FLANGE NUT-(CHROMATE) M4	2
4	M9005853A	VENDER MECHA ASSY-(C)	1
5		TRUSS HD TAP TIGHT-S-<BLACK CHROMATE> 4X10	8
6	M9005855A	COIN ENTRY ASSY-(HK)-(N)	1
7			
8			
9			
10			
11			
12			
13			
14			
15			
16			
17			
18			
19			
20			
21			
22			
23			
24			
25			

NOTE

TITLE VIDEO CABINET ASSY-(1.7R)-(WITH ALARM)

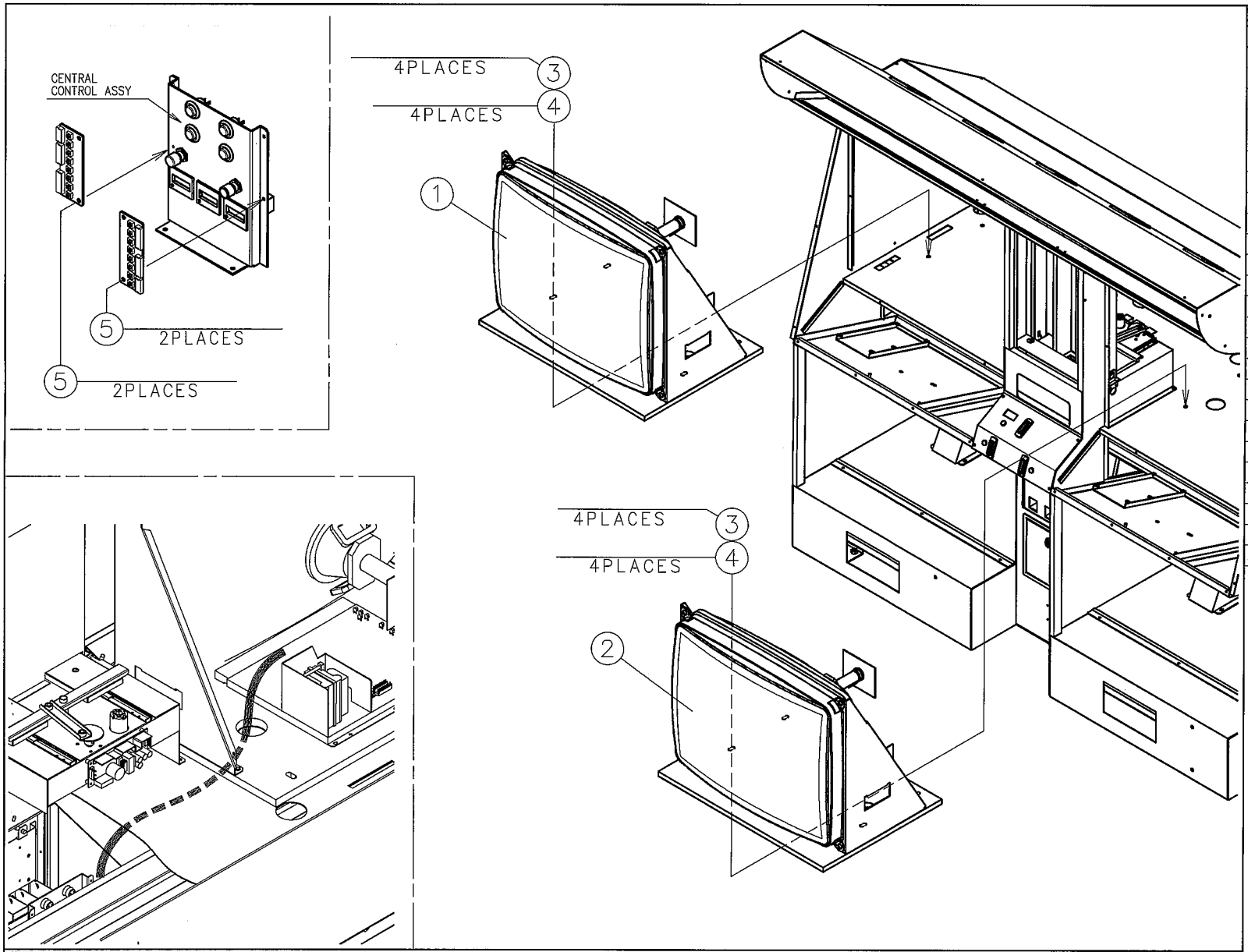

PARTS LIST			
No	PARTS No.	PARTS LIST	QTY
1	M0800226A	VIDEO ASSY-29-(1.7R)-L	1
2	M0800227A	VIDEO ASSY-29-(1.7R)-R	1
3		SEMUTH BOLT-S-(CHROMATE) M6X30	8
4		PLAIN WASHER-(BLACK CHROMATE) 7X22X1.6T	8
5		WASHER HD TAP TIGHT-S-(CHROMATE) 3X8	4
6			
7			
8			
9			
10			
11			
12			
13			
14			
15			
16			
17			
18			
19			
20			
21			
22			
23			
24			
25			

1.3R 仕様

1 M08 00228A VIDEO ASSY-29-(1.3R)-L

2 M08 00229A VIDEO ASSY-29-(1.3R)-R

NOTE

TITLE VIDEO CABINET ASSY-(1.7R)-(WITH ALARM)

VIDEO HARNESS
DRIVER HARNESS
KEY HARNESS

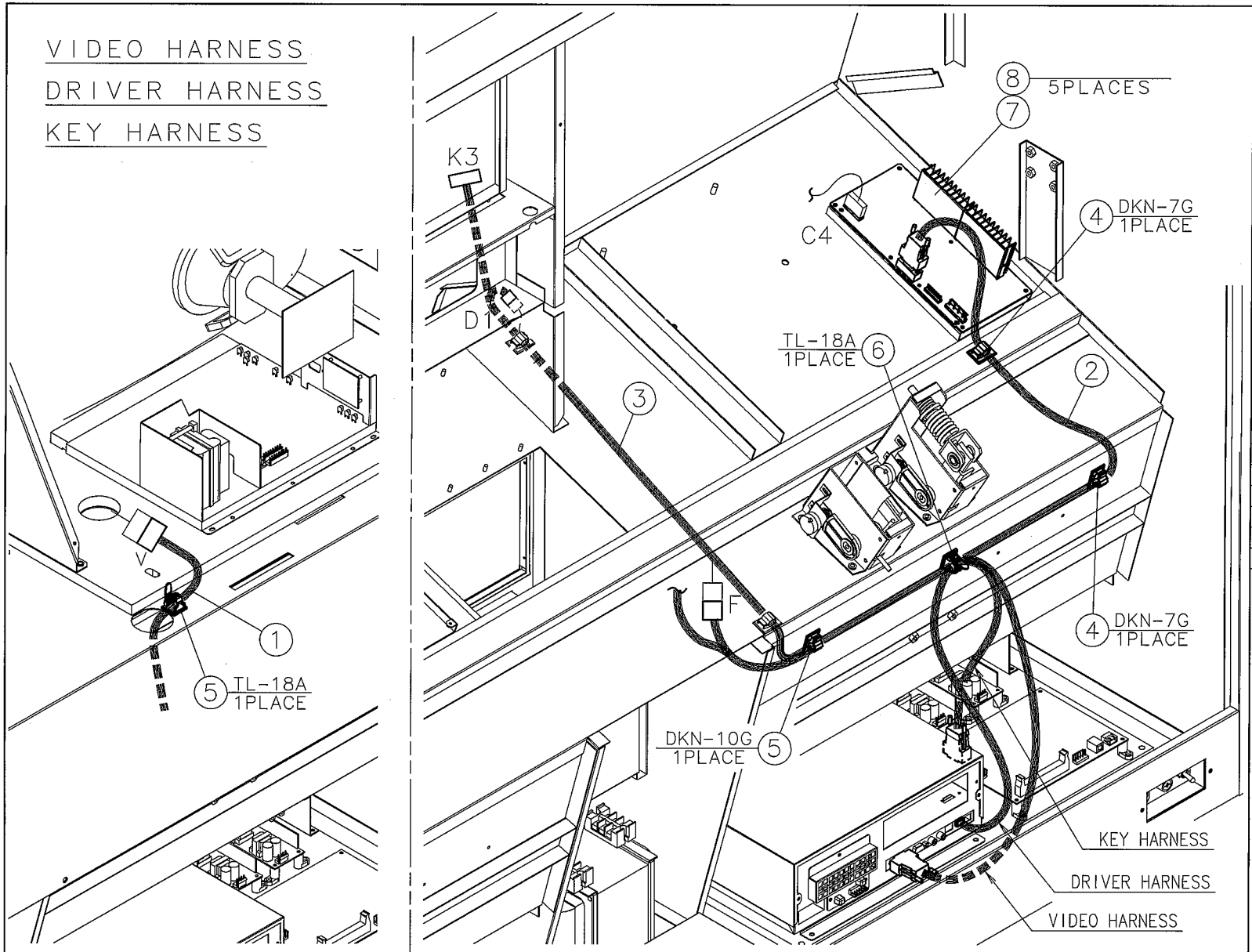

PARTS LIST

No	PARTS No.	PARTS LIST	QTY
1	L9004835A	VIDEO HARNESS	1
2	L9004827A	DRIVER HARNESS	1
3	L9004830A	KEY HARNESS	1
4	F0100070A	DK CRAMP-(24X19) DKN-7G	2
5	F0100071A	DK CRAMP-(30X21) DKN-10G	1
6	F0100068A	TL CRAMP TL-18A	2
7	K91X0927A	HANDLE MOTOR P.C.B.ASSY UDDF41B1TA	1
8		PAN HD SEMUTH SCREW-W-(CHROMATE) M3X8	5
9			
10			
11			
12			
13			
14			
15			
16			
17			
18			
19			
20			
21			
22			
23			
24			
25			

NOTE

TITLE VIDEO CABINET ASSY-(1.7R)-(WITH ALARM)

VIDEO HARNESS
DRIVER HARNESS
KEY HARNESS

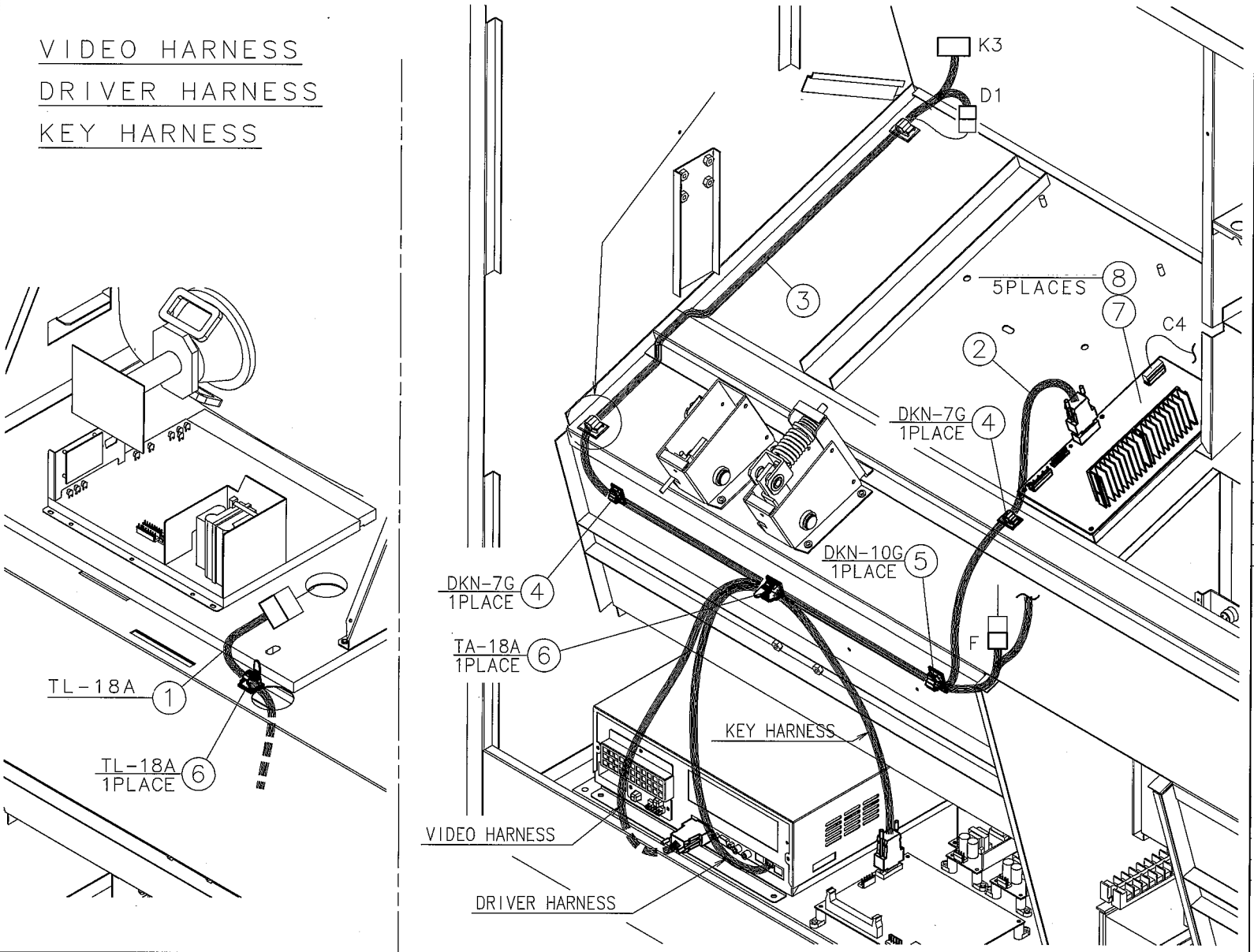

PARTS LIST

No	PARTS No.	PARTS LIST	QTY
1	L9004835A	VIDEO HARNESS	1
2	L9004827A	DRIVER HARNESS	1
3	L9004830A	KEY HARNESS	1
4	F0100070A	DK CRAMP-(24X19) DKN-7G	2
5	F0100071A	DK CRAMP-(30X21) DKN-10G	1
6	F0100068A	TL CRAMP TL-18A	2
7	K91X0927A	HANDLE MOTOR P.C.B.ASSY UDDF41B1TA	1
8		PAN HD SEMUTH SCREW-W-(CHROMATE) M3X8	5
9			
10			
11			
12			
13			
14			
15			
16			
17			
18			
19			
20			
21			
22			
23			
24			
25			

NOTE

TITLE VIDEO CABINET ASSY-(1.7R)-(WITH ALARM)

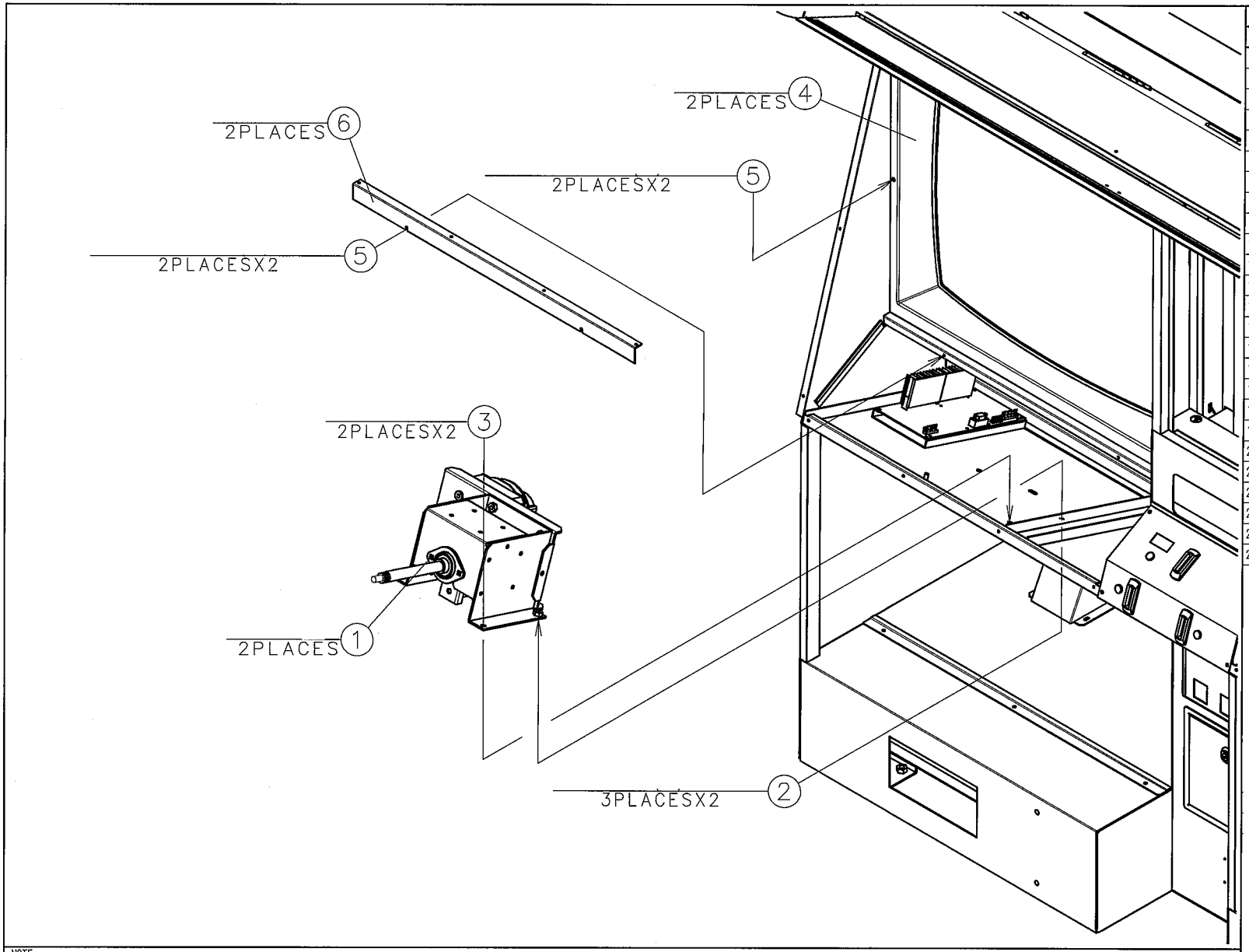

PARTS LIST

No	PARTS No.	PARTS LIST	QTY
1	M0100279A	STEERING MECHA ASSY	2
2		SEMUTH BOLT-W-<BLACK CHROMATE> M6X16	6
3		FLANGE NUT-(CHROMATE) M6	4
4	F9005765A	VIDEO MASK-29 1.7R	2
5		TRUSS HD TAP TIGHT-S-<BLACK CHROMATE> 4X10	8
6	E3016544A	DASHBOARD BRACKET	2
7			
8			
9			
10			
11			
12			
13			
14			
15			
16			
17			
18			
19			
20			
21			
22			
23			
24			
25			

1.3R仕様
4　VIDEO MASK-29 1.3R

NOTE

TITLE VIDEO CABINET ASSY-(1.7R)-(WITH ALARM)

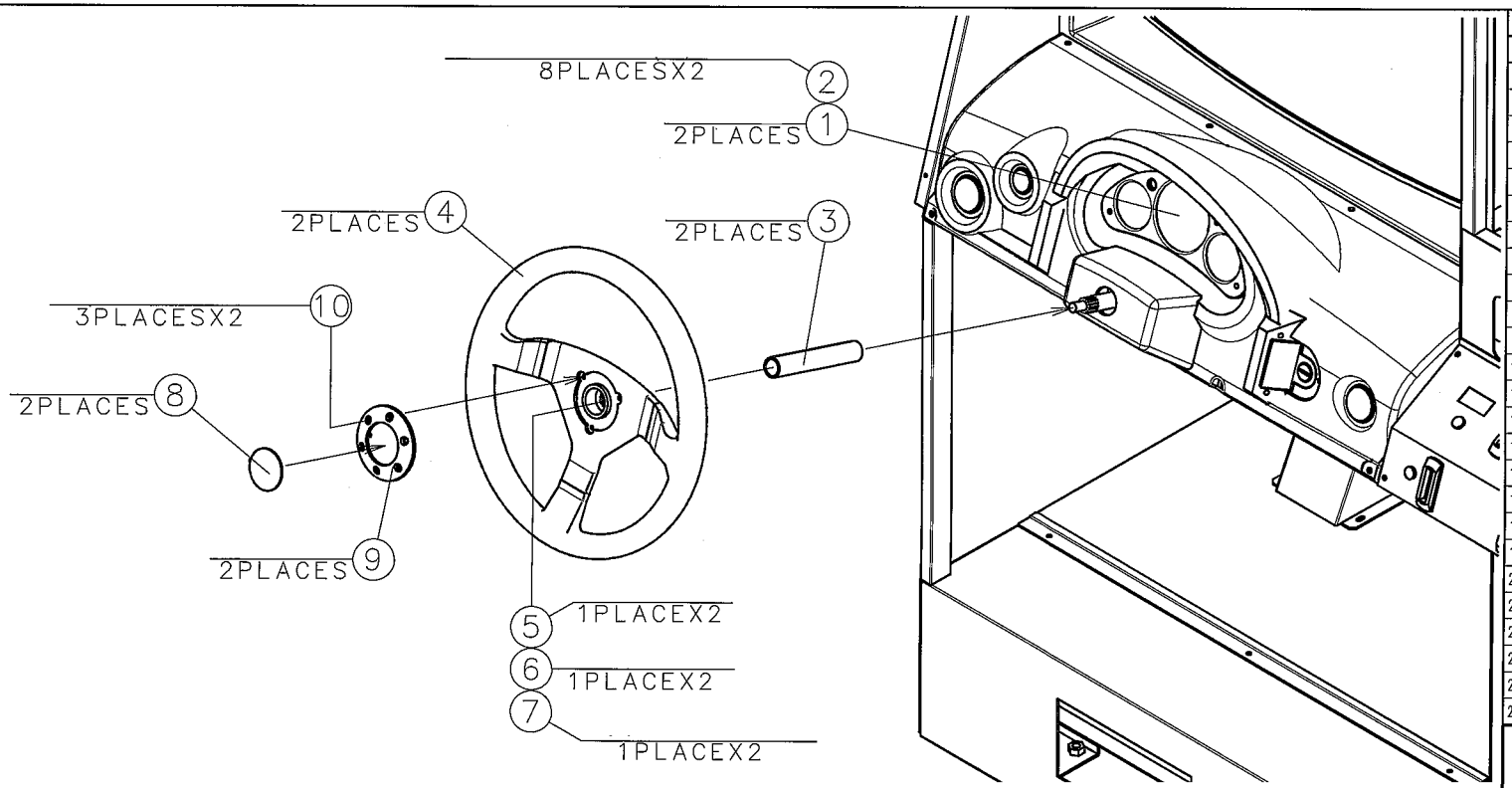

PARTS LIST

No	PARTS No.	PARTS LIST	QTY
1	M9005791A	DASHBOARD PANEL ASSY	2
2		TRUSS HD TAP TIGHT-S-<BLACK CHROMATE> 4X10	16
3	E1001832A	STEERING COLLAR	2
4	H9000601A	STEERING WHEEL	2
5		PLAIN WASHER-(CHROMATE) 10	2
6		SPRING WASHER-(CHROMATE) 10	2
7		SELF LOCKING NUT-U-(UNICHRO) M10	2
8	G9501236A	STEERING EMBLEM	2
9	F9005790A	EMBLEM COVER ALUMINIUM PLATING	2
10		PAN HD SCREW-<UNICHRO> M4X12	6
11			
12			
13			
14			
15			
16			
17			
18			
19			
20			
21			
22			
23			
24			
25			

NOTE

TITLE VIDEO CABINET ASSY-(1.7R)-(WITH ALARM) [18]

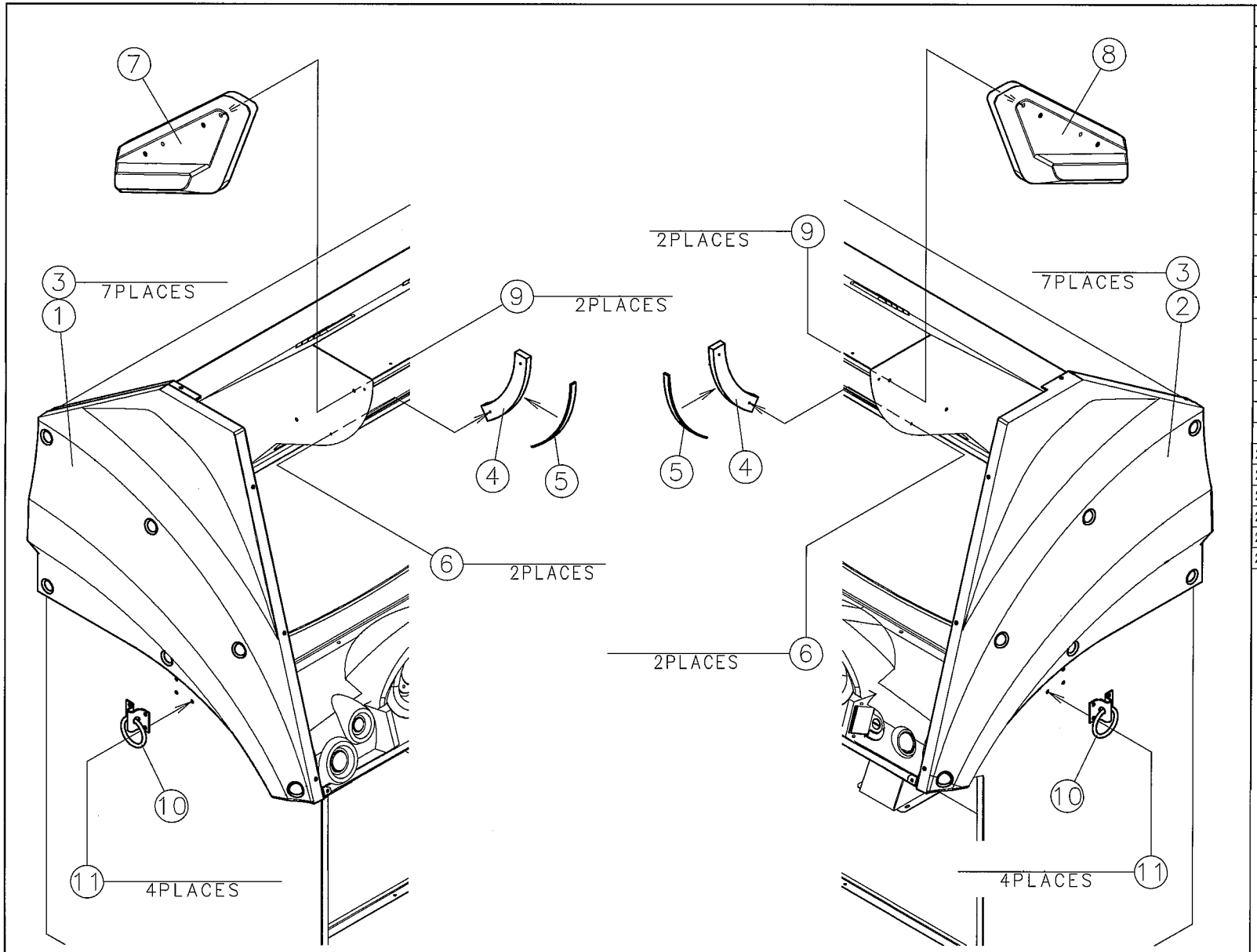

PARTS LIST

No	PARTS No.	PARTS LIST	QTY
1	F9005769A	SIDE COVER-L	1
2	F9005770A	SIDE COVER-R	1
3		TRUSS HD TAP TIGHT-S-<CHROME> 4X10	14
4	D2001851A	TITLE SUPPORT BOARD	2
5	F9005802A	SPONGE 225X12X2	2
6		BIND HD SELF TAP-(CHROMATE) 3.5X12-1	4
7	M9005801A	TITLE SIDE COVER ASSY-L	1
8	M9005802A	TITLE SIDE COVER ASSY-R	1
9		PAN HD SEMUTH SCREW-W-<BLACK CHROMATE> M5X25	4
10	E5060657A	HITCHING RING ATU-57-(BLACK)	2
11		PAN HD SEMUTH SCREW-W-<BLACK CHROMATE> M5X12	8
12			
13			
14			
15			
16			
17			
18			
19			
20			
21			
22			
23			
24			
25			

NOTE

TITLE VIDEO CABINET ASSY-(1.7R)-(WITH ALARM)

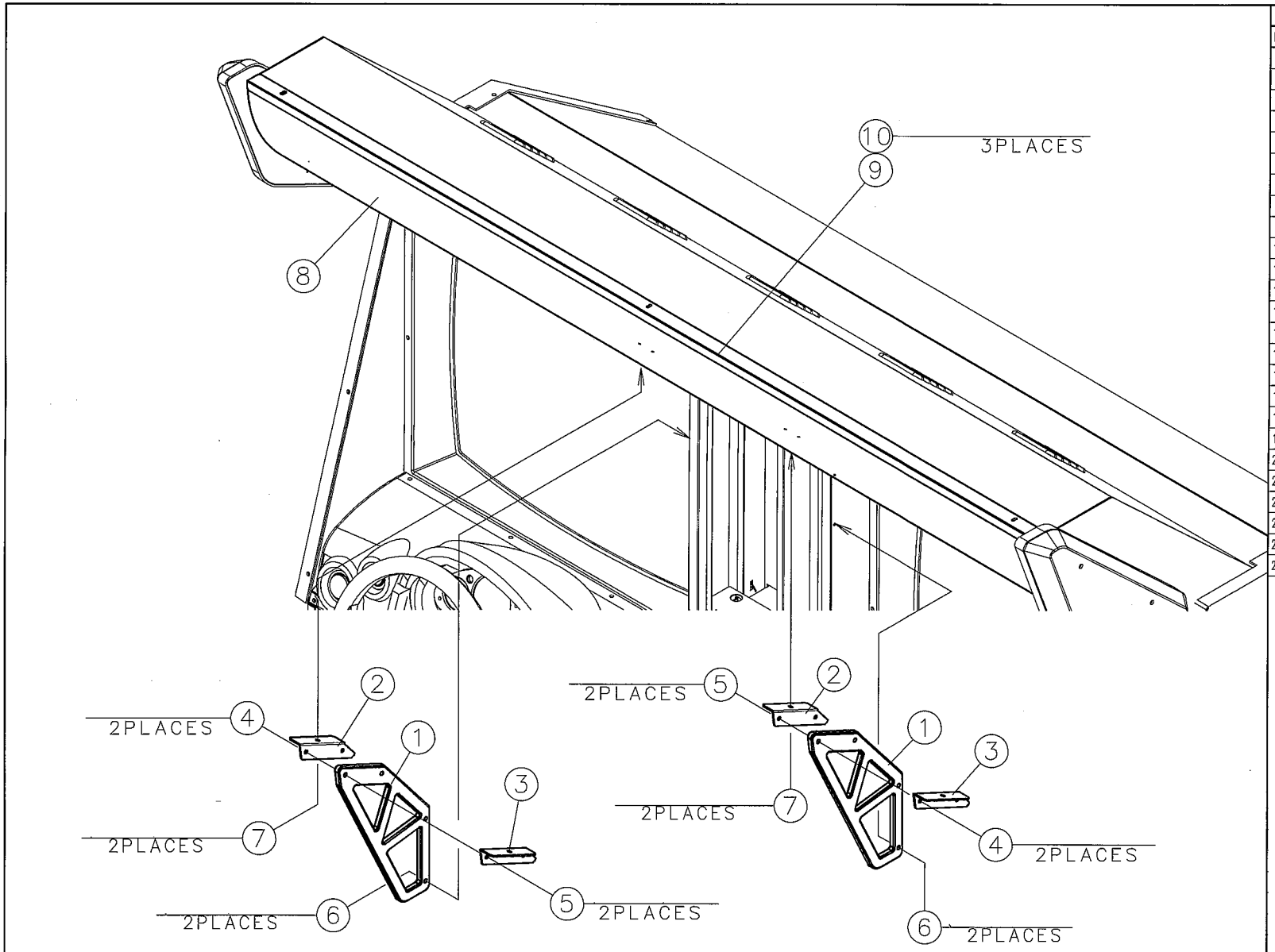

PARTS LIST

No	PARTS No.	PARTS LIST	QTY
1	E9100045A	TITLE STAY	2
2	E3100630A	STAY BRACKET-L	2
3	E3100631A	STAY BRACKET-R	2
4		TRUSS HD SCREW-<CHROME> M4X14	4
5		HEX CAP NUT-<CHROME> M4	4
6		TRUSS HD TAP TIGHT-S-<CHROME> 4X16	4
7		TRUSS HD TAP TIGHT-S-<CHROME> 4X10	4
8	G4500212A	TITLE PANEL	1
9	E3100633A	TITLE SUPPORT	1
10		TRUSS HD TAP TIGHT-S-<BLACK CHROMATE> 4X10	3
11			
12			
13			
14			
15			
16			
17			
18			
19			
20			
21			
22			
23			
24			
25			

NOTE

TITLE VIDEO CABINET ASSY-(1.7R)-(WITH ALARM)

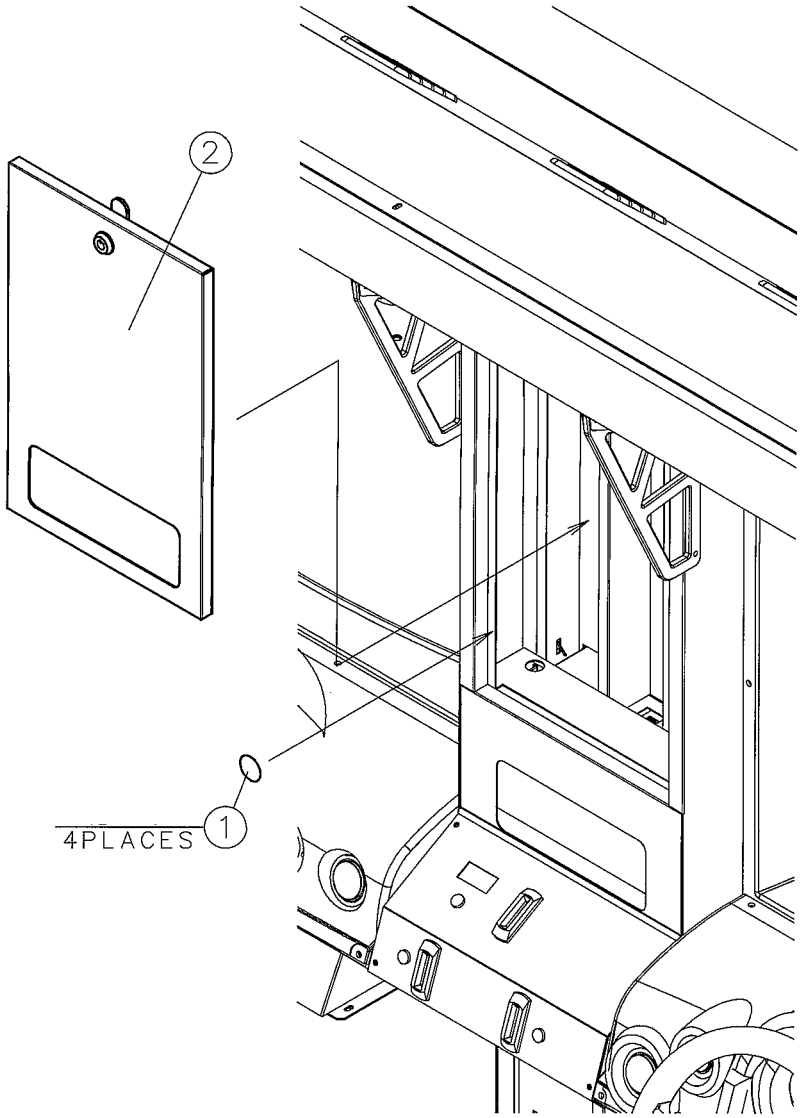

PARTS LIST

No	PARTS No.	PARTS LIST	QTY
1	F9005299A	BUMPOM SJ-5702	4
2	M9005857A	VENDER DOOR ASSY-(C)-(N)	1
3			
4			
5			
6			
7			
8			
9			
10			
11			
12			
13			
14			
15			
16			
17			
18			
19			
20			
21			
22			
23			
24			
25			

NOTE

TITLE VIDEO CABINET ASSY-(1.7R)-(WITH ALARM)

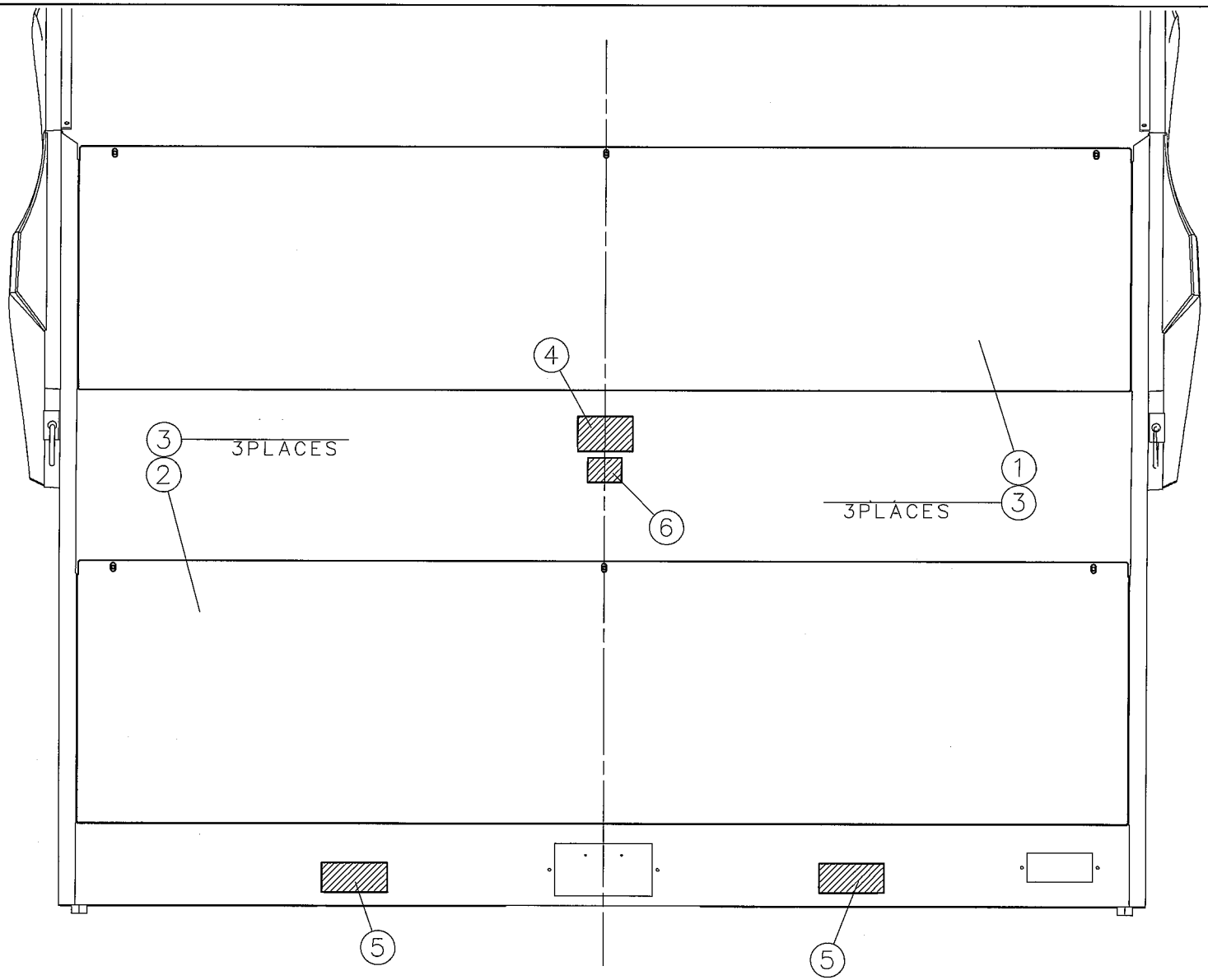

PARTS LIST

No	PARTS No.	PARTS LIST	QTY
1	E3100617A	BACK DOOR-A	1
2	E3100618A	BACK DOOR-B	1
3		PAN HD SEMUTH SCREW-W-<BLACK CHROMATE> M5X12	6
4	G1501542A	VOLTAGE WARNING STICKER-E	1
5	G1500171A	TRANSPORT STICKER-E	2
6		WEIGHT STICKER 325KG	1
7			
8			
9			
10			
11			
12			
13			
14			
15			
16			
17			
18			
19			
20			
21			
22			
23			
24			
25			

NOTE

TITLE VIDEO CABINET ASSY-(1.7R)-(WITH ALARM)

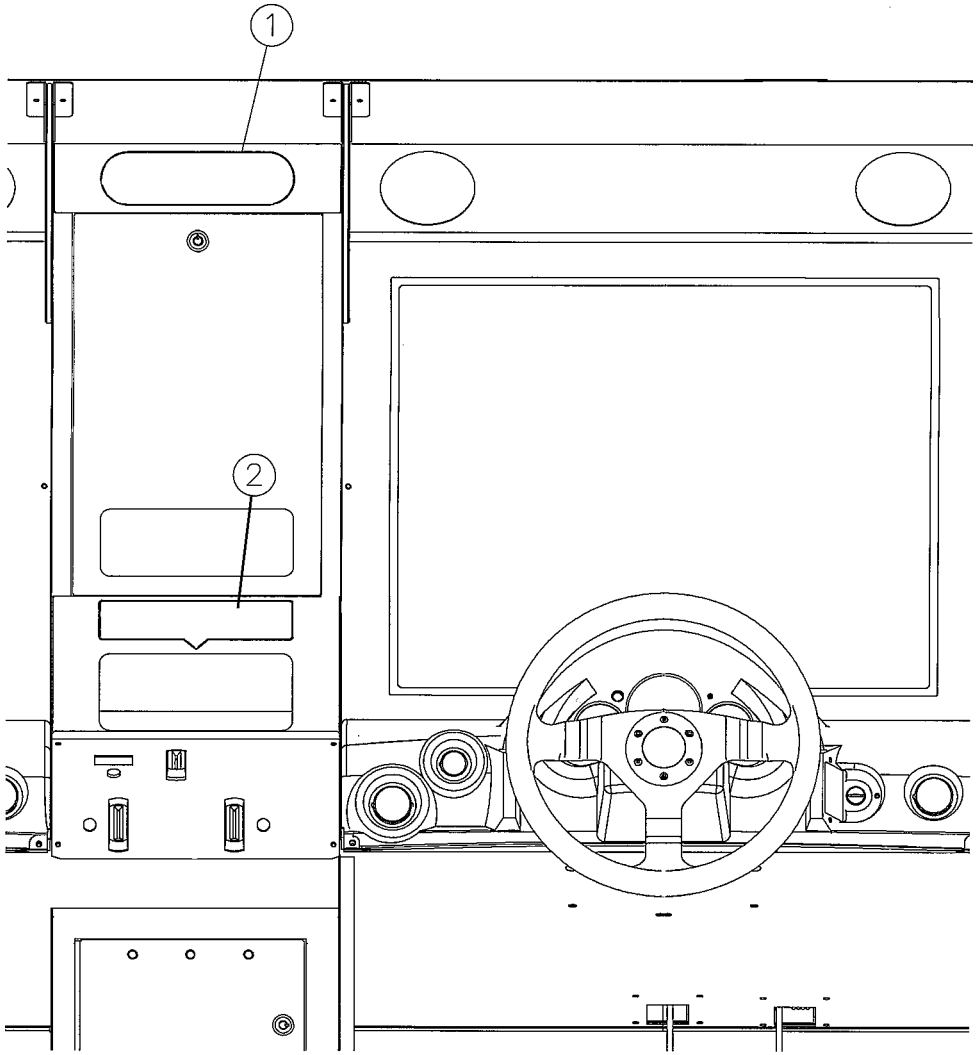

PARTS LIST			
No	PARTS No.	PARTS LIST	QTY
1	G1502047A	DISPLAY STICKER-A-(C)	1
2	G1502048A	DISPLAY STICKER-C-(C)	1
3			
4			
5			
6			
7			
8			
9			
10			
11			
12			
13			
14			
15			
16			
17			
18			
19			
20			
21			
22			
23			
24			
25			

NOTE

TITLE VIDEO CABINET ASSY-(1.7R)-(WITH ALARM)

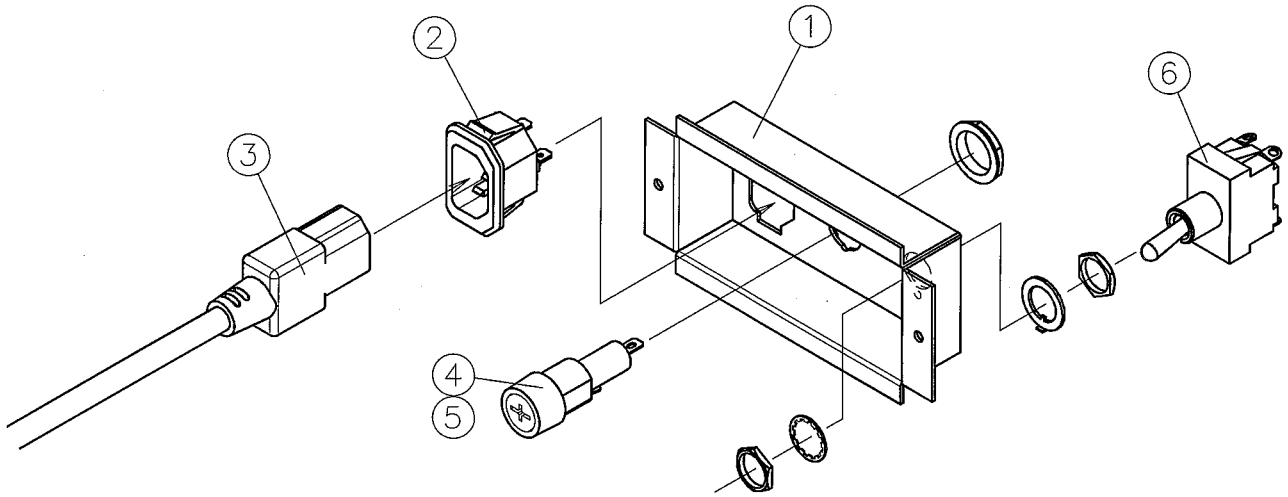

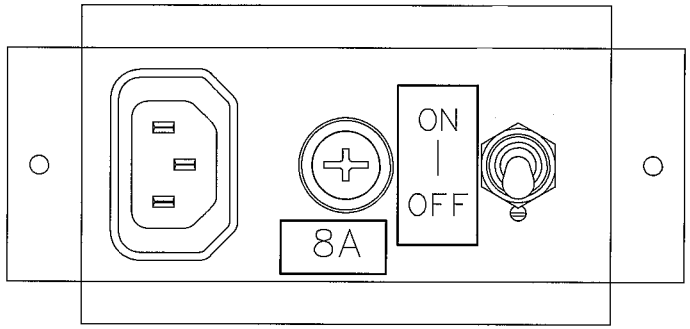

PARTS LIST

No	PARTS No.	PARTS LIST	QTY
1	E3016570A	SWITCH BOX	1
2	C0551019A	AC INLET NC-179-F4.8	1
3	C0700334A	AC CORD AC 250V 10A	1
4	C0550144A	FUSE HOLDER MF526	1
5	C1600084A	FUSE-(8A 250V)-(6.3X30)	1
6	C0200623A	TOGGLE SWITCH ST225K-(WITH B005-1)	1
7	G1001714A	CABINET STICKER SHEET-(VER.3)	1
8			
9			
10			
11			
12			
13			
14			
15			
16			
17			
18			
19			
20			
21			
22			
23			
24			
25			

NOTE

TITLE SWITCH BOX ASSY

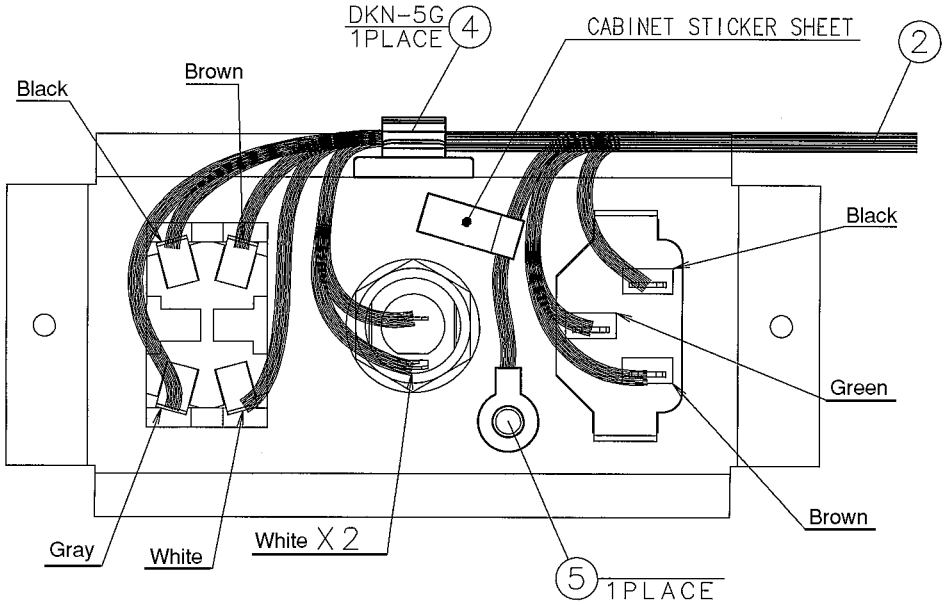

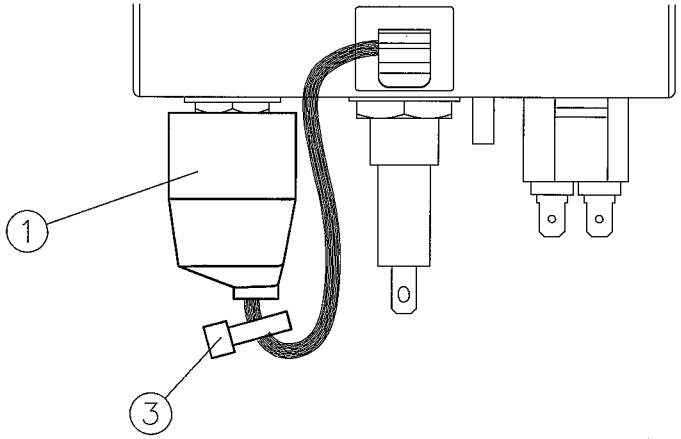

PARTS LIST			
No	PARTS No.	PARTS LIST	QTY
1	F9003168A	MAIN SWITCH COVER	1
2	L9004819A	AC 1 HARNESS	1
3	F0100028A	CONVEX-(CV-100) SKB-100	1
4	F0100069A	DK CRAMP-(17.5X19) DKN-5G	1
5		NUT-(CHROMATE) M4	1
6			
7			
8			
9			
10			
11			
12			
13			
14			
15			
16			
17			
18			
19			
20			
21			
22			
23			
24			
25			

NOTE

TITLE SWITCH BOX ASSY

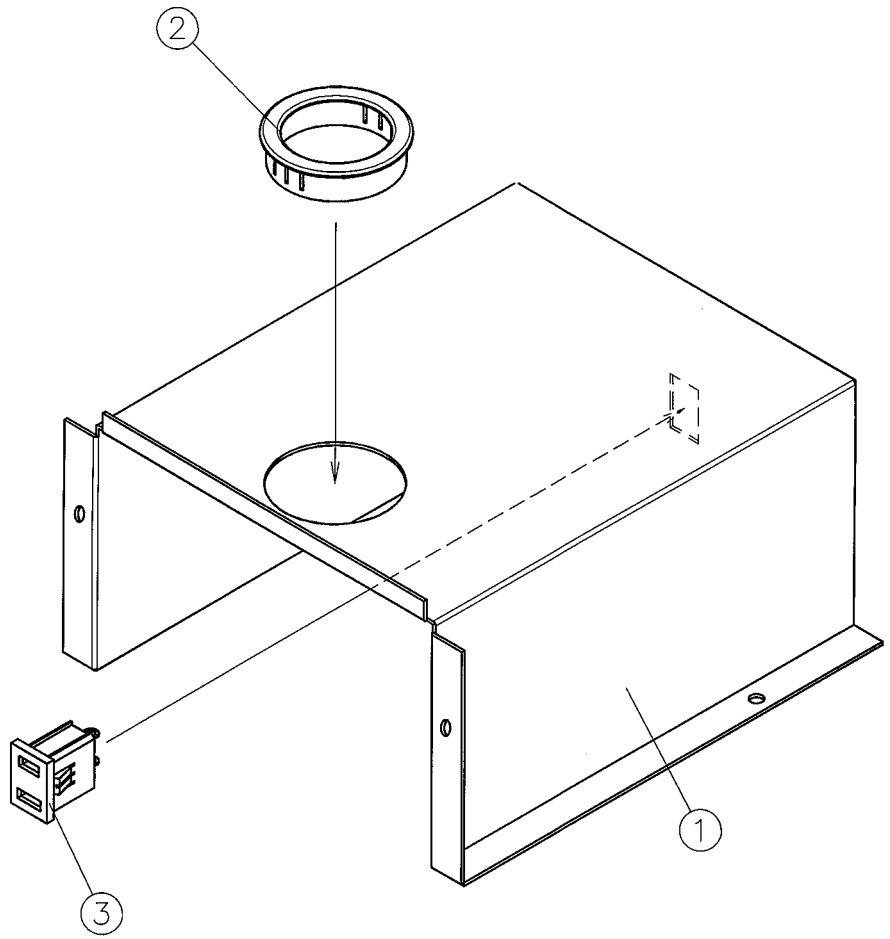

PARTS LIST

No	PARTS No.	PARTS LIST	QTY
1	E3016547A	HUB BOX	1
2	F9005799A	ONE-TOUCH BUSH NB-35	1
3	C0551026A	SERVICE OUTLET CR-01-FB04	1
4			
5			
6			
7			
8			
9			
10			
11			
12			
13			
14			
15			
16			
17			
18			
19			
20			
21			
22			
23			
24			
25			

NOTE

TITLE HUB BOX ASSY

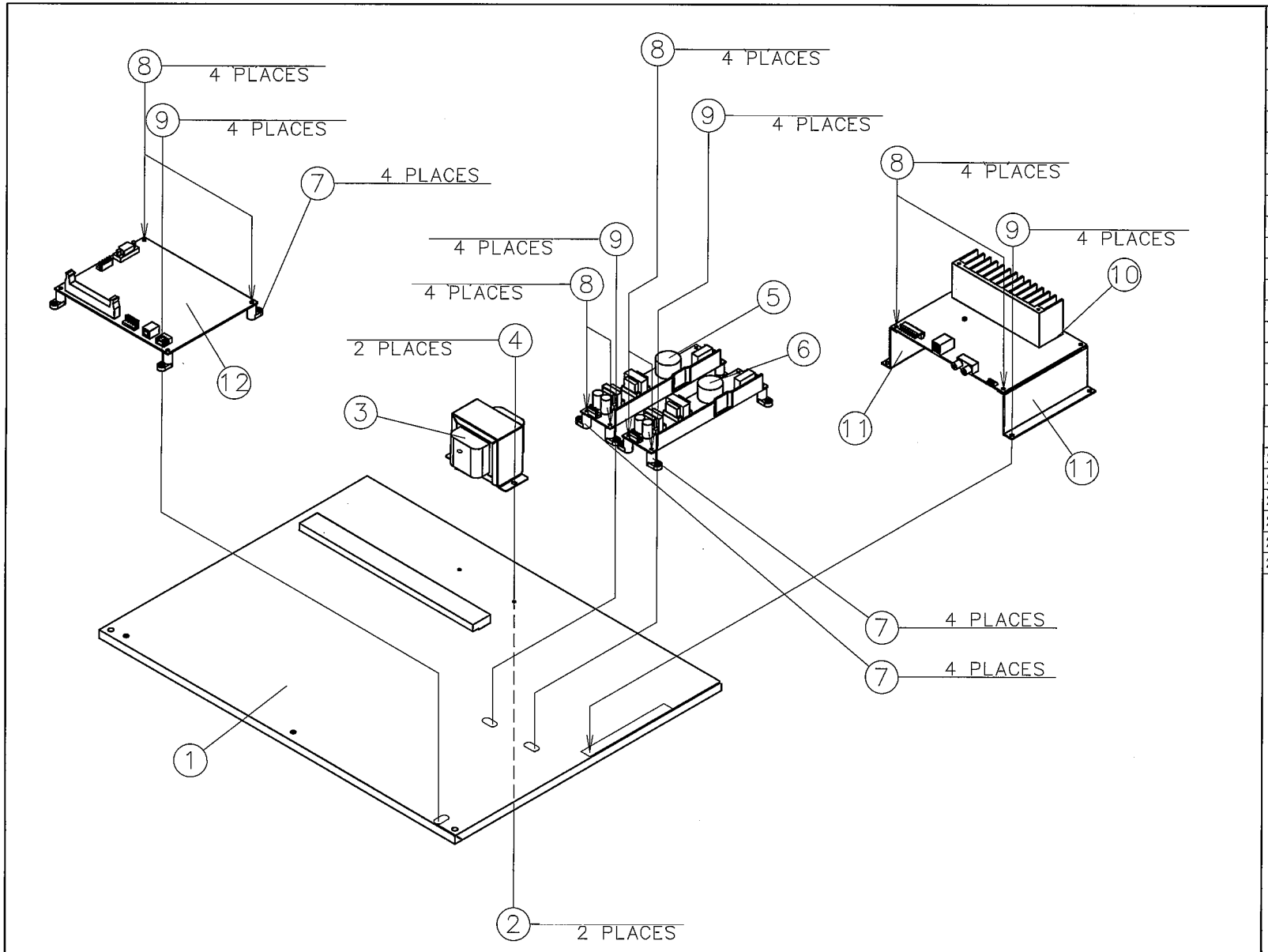

NOTE

TITLE PCB BASE ASSY

PARTS LIST			
No	PARTS No.	PARTS LIST	QTY
1	D2001849A	PCB BASE	1
2		TEE SCREW-(BLACK CHROMATE) M4X25	2
3	C1000527A	TRANSFORMER 14V 5A	1
4		FLANGE NUT M4	2
5	M1300047A	SWITCHING REGULATOR VS50B-5	1
6	M1300048A	SWITCHING REGULATOR VS50B-12	1
7	F9000668A	RES LOCK OL-E3	12
8		PAN HD SEMUTH SCREW-W M3X8	16
9		BIND HD SELF TAP 3.5X12-1	16
10	K91X0950A	AMP P.C.B.ASSY BATTLE GEAR 3	1
11	E3016538A	AMP BRACKET	2
12	K91X0951A	JVS P.C.B.ASSY BATTLE GEAR 3	1
13			
14			
15			
16			
17			
18			
19			
20			
21			
22			
23			
24			
25			

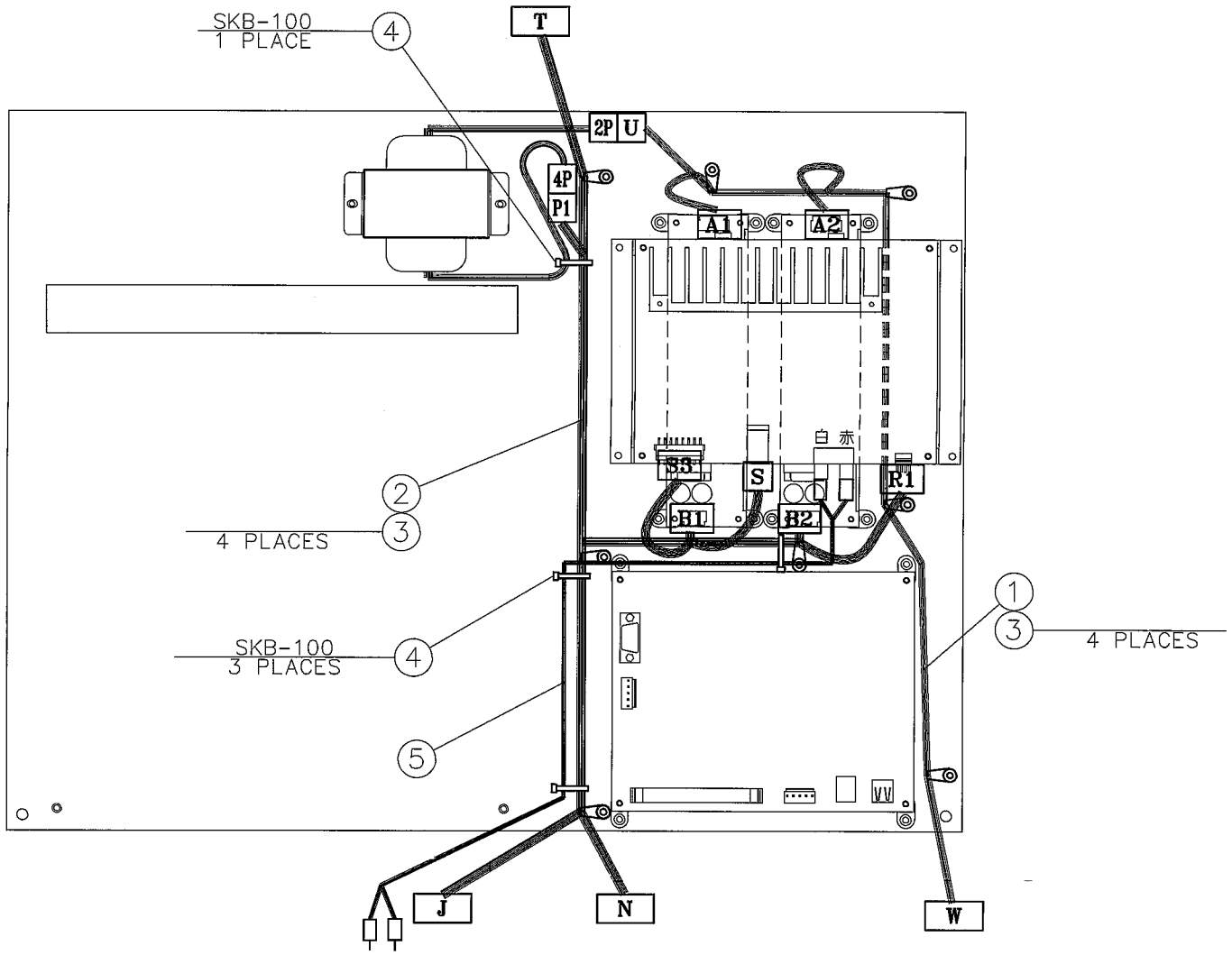

PARTS LIST

No	PARTS No.	PARTS LIST	QTY
1	L9004828A	ELEC AC HARNESS	1
2	L9004829A	ELEC DC HARNESS	1
3		BIND HD SELF TAP 3.5X12-1	8
4	F0100028A	CONVEX-(CV-100) SKB-100	4
5	L9004817A	AUDIO CABLE-(0.6M)	1
6			
7			
8			
9			
10			
11			
12			
13			
14			
15			
16			
17			
18			
19			
20			
21			
22			
23			
24			
25			

NOTE

TITLE PCB BASE ASSY

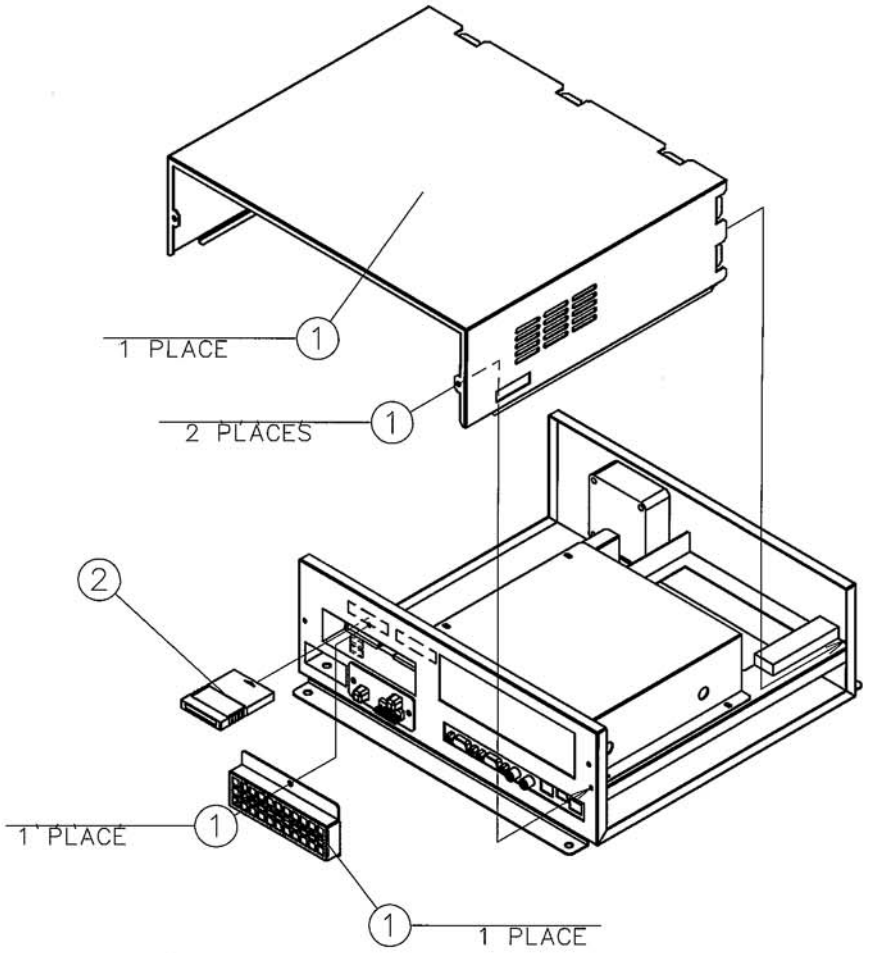

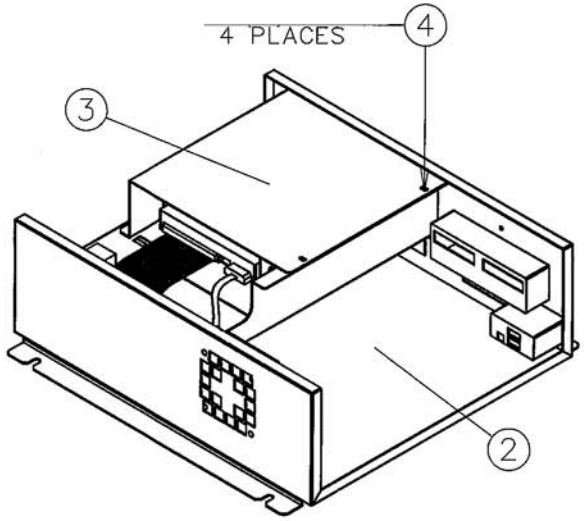

PARTS LIST

No	PARTS No.	PARTS LIST	QTY
1	M1000282A	SYSTEM 246 P.C.B. UNIT RACK-B	1
2	B3900068A	SECURITY DONGLE-(BATTLE GEAR3)-(UAS) COH-H10020	1
3	M9005951A	HARD DISK ASSY-(UAS)	1
4		PAN HD SEMUTH SCREW-W M3X8	4
5			
6			
7			
8			
9			
10			
11			
12			
13			
14			
15			
16			
17			
18			
19			
20			
21			
22			
23			
24			
25			

NOTE

TITLE SHIELD CASE & HARD DISK ASSY

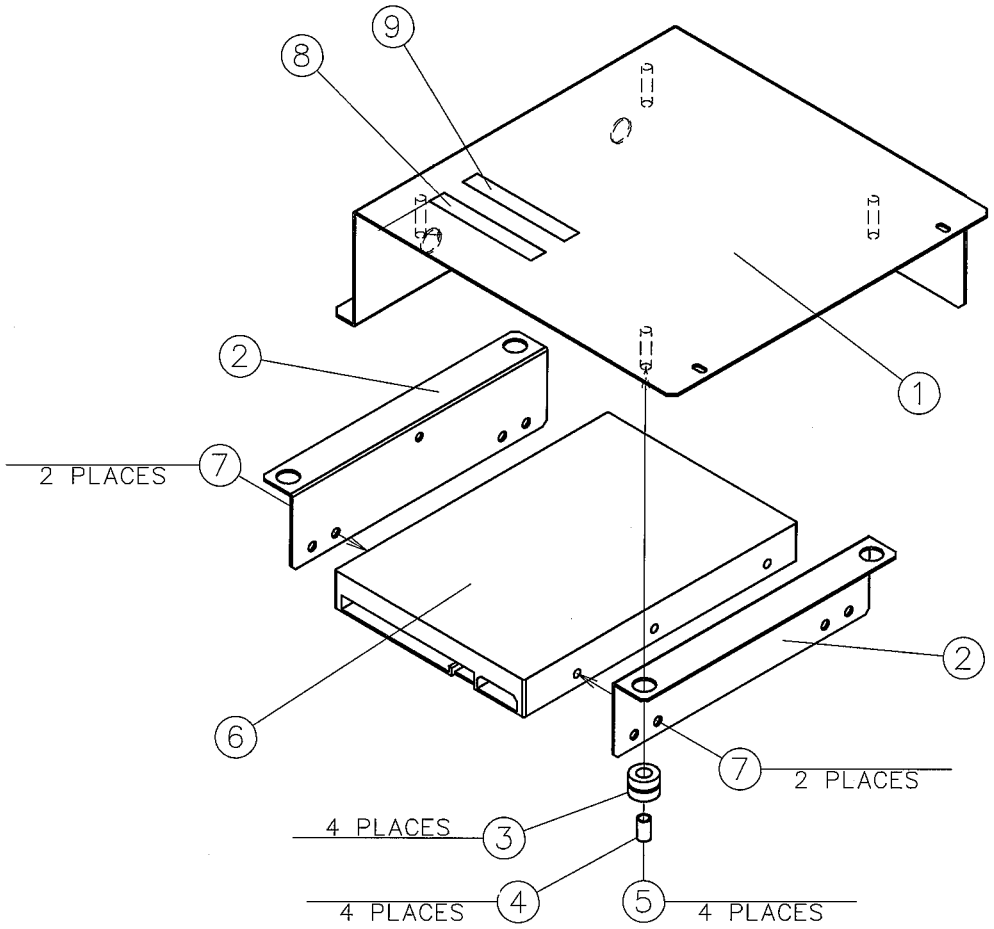

PARTS LIST

No	PARTS No.	PARTS LIST	QTY
1	E3016545A	HDD BASE	1
2	E3016546A	HDD FRAME	2
3	F9005197A	BUSH VIBRATION ISOLATOR VB-1209-SE	4
4		SPACER 4X9	4
5		FLANGE NUT M4	4
6	M9005952A	HARD DISK-(3.5"E-IDE)(30.0GB) BATLE GEAR3-(USA)	1
7		PAN HD SCREW NO.6-32X3/16 UNC	4
8	G160T699A	HARD DISK ASSY ST (BG3)-(USA)	1
9	G1601683A	HD機別 STICKER-(30.0GB MAXTOR) 2F030J0	1
10			
11			
12			
13			
14			
15			
16			
17			
18			
19			
20			
21			
22			
23			
24			
25			

NOTE

TITLE HARD DISK ASSY

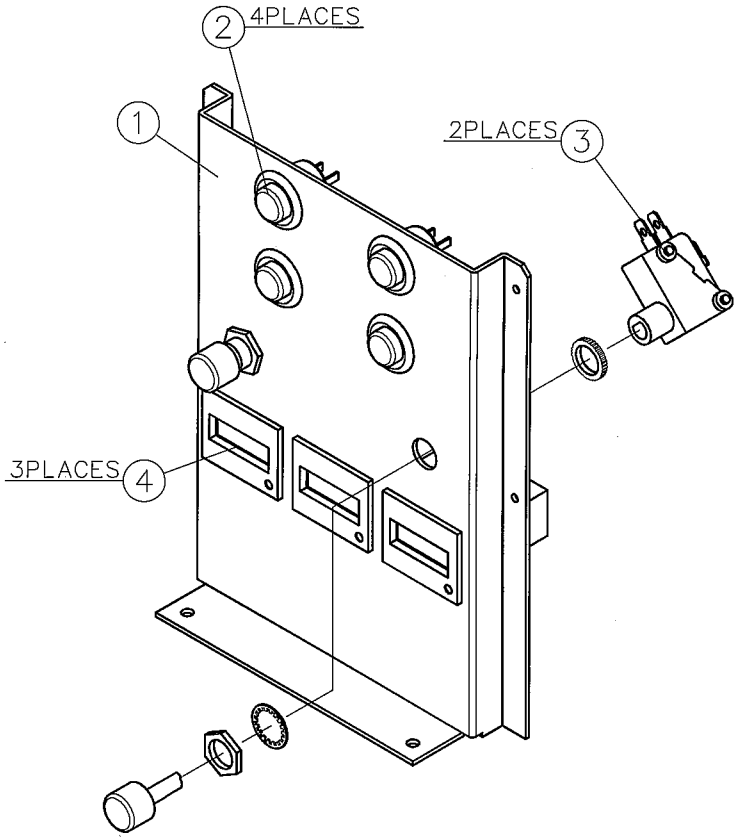

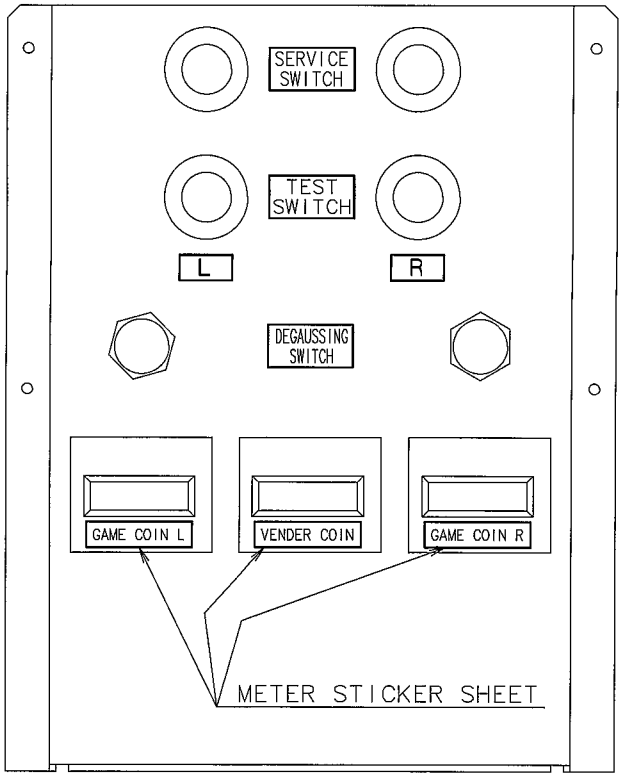

PARTS LIST

No	PARTS No.	PARTS LIST	QTY
1	E3016539A	CENTRAL CONTROL BRACKET	1
2	C0200313A	PUSH SWITCH-2P DS-412	4
3	C0200033A	PUSH BUTTON SWITCH VAQ-4R-K	2
4	C1700065A	COUNTER-(DC12V) MZ-670-115	3
5			
6			
7			
8			
9			
10			
11			
12			
13			
14			
15			
16			
17			
18			
19			
20			
21			
22			
23			
24			
25			

NOTE

TITLE CENTRAL CONTROL ASSY

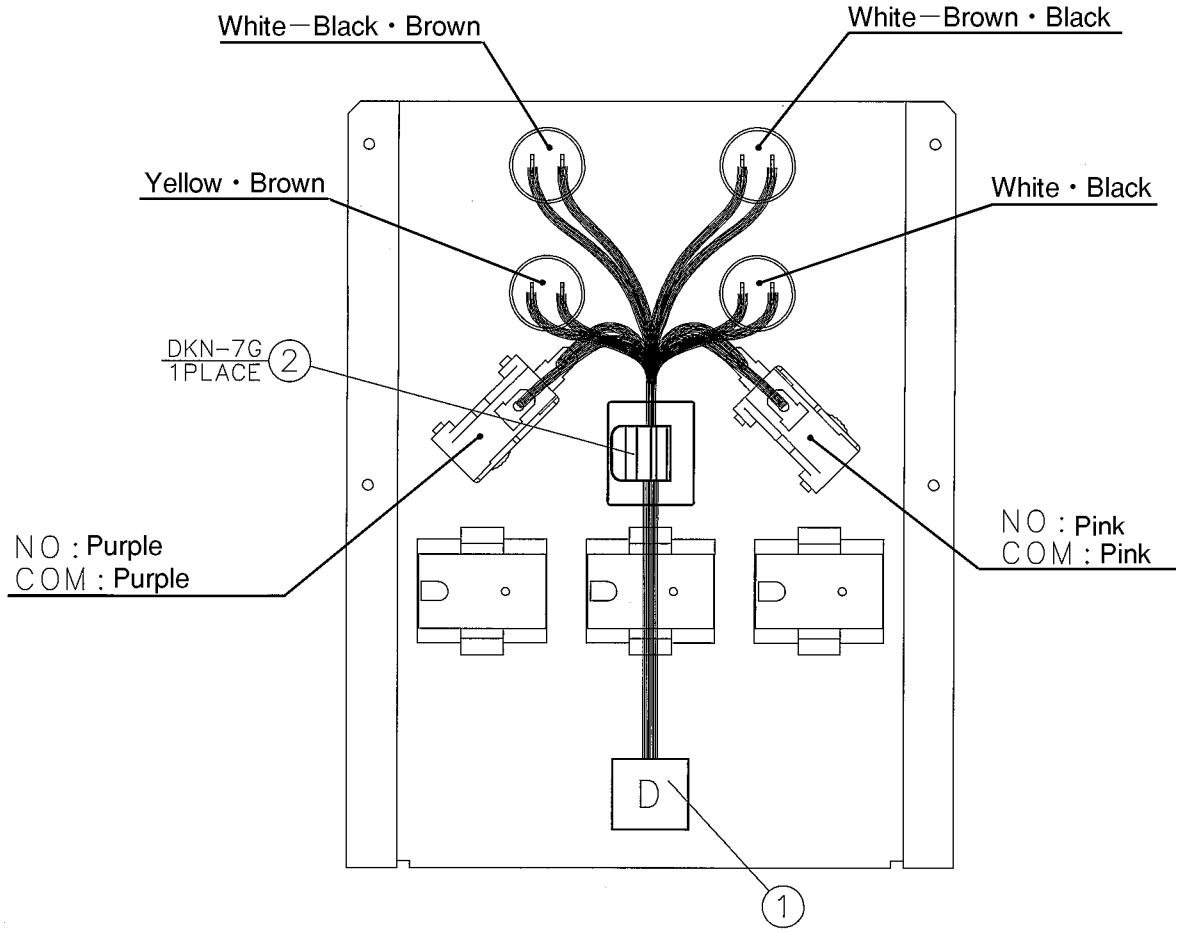

PARTS LIST

No	PARTS No.	PARTS LIST	QTY
1	L9004826A	D HARNESS	1
2	F0100070A	DK CRAMP-(24X19) DKN-7G	1
3			
4			
5			
6			
7			
8			
9			
10			
11			
12			
13			
14			
15			
16			
17			
18			
19			
20			
21			
22			
23			
24			
25			

NOTE

TITLE CENTRAL CONTROL ASSY

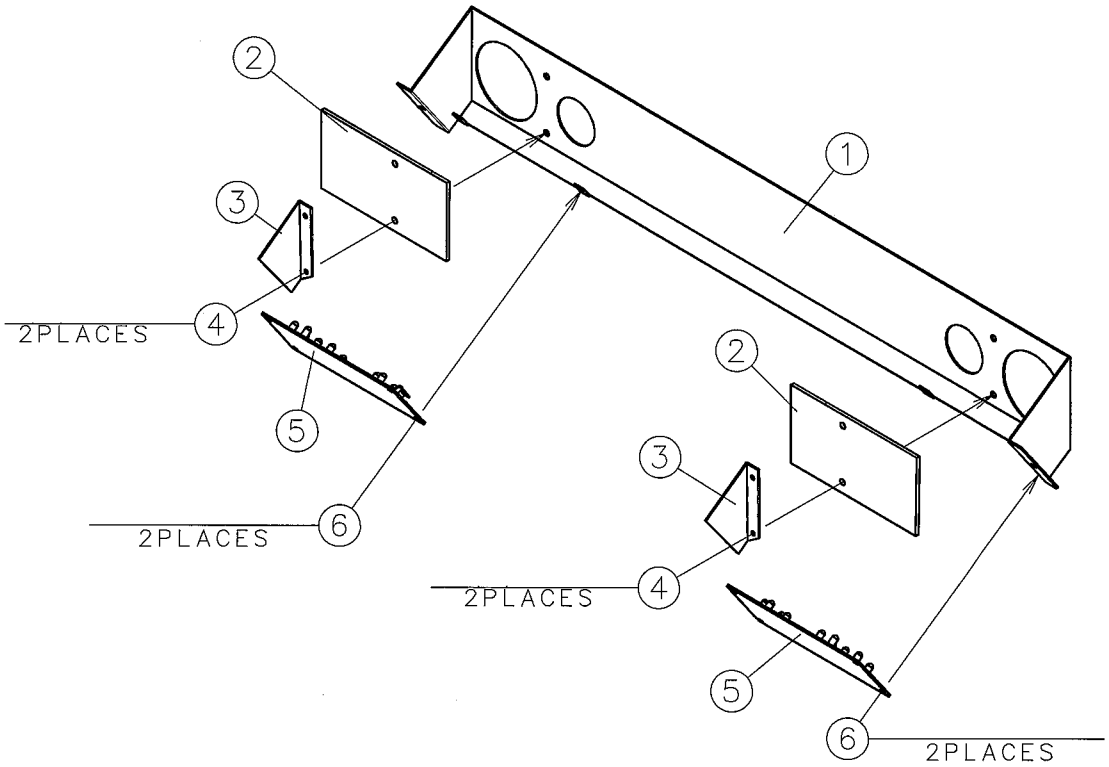

PARTS LIST			
No	PARTS No.	PARTS LIST	QTY
1	E3100632A	TITLE LED BRACKET	1
2	F9005804A	TITLE LENS	2
3	E3016554A	PARTITION BRACKET	2
4		TRUSS HD TAP TIGHT-S-<BLACK CHROMATE> 4X10	4
5	K92X0066A	LED P.C.B.ASSY-(1/2)	2
6		WASHER HD TAP TIGHT-S-(CHROMATE) 3X8	4
7	L9004833A	TITLE HARNESS	1
8		PA CRAMP PA-20B	2
9			
10			
11			
12			
13			
14			
15			
16			
17			
18			
19			
20			
21			
22			
23			
24			
25			

TITLE HARNESS

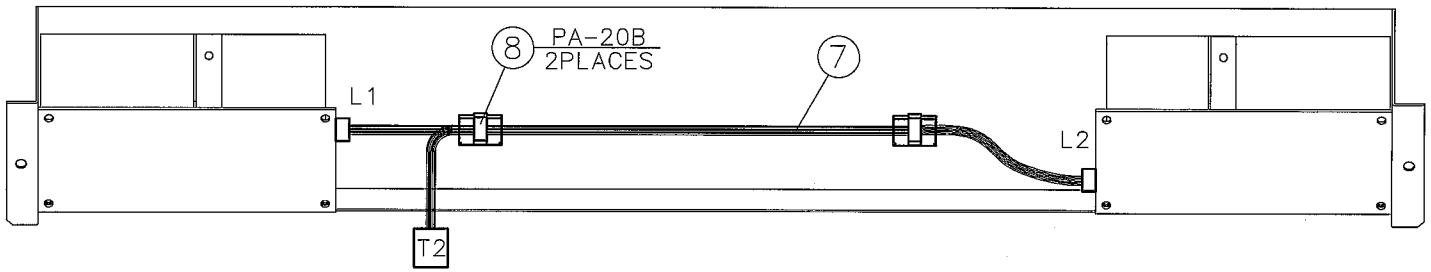

NOTE

TITLE TITLE LED ASSY-L

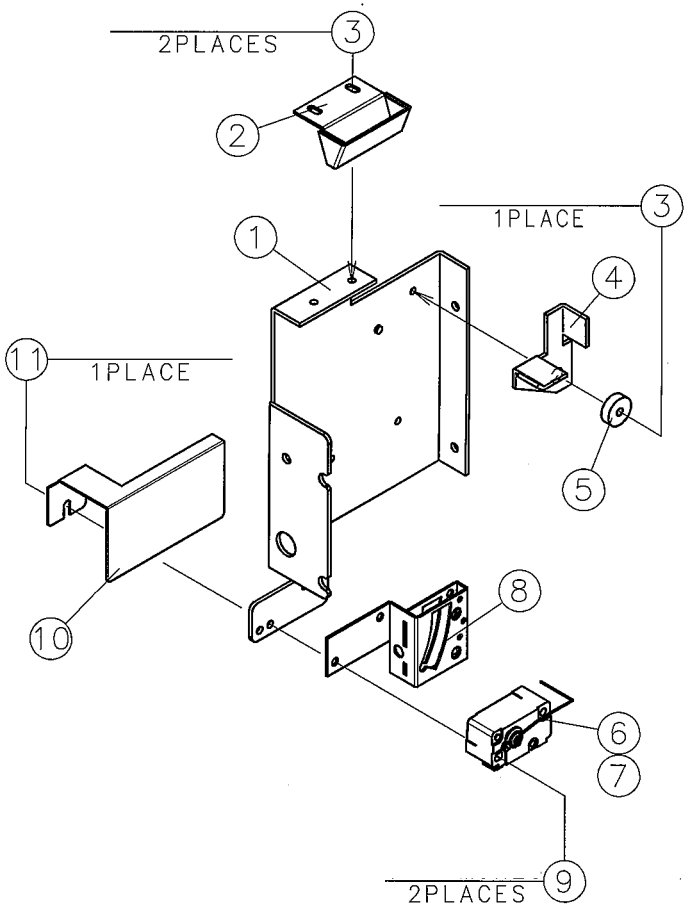

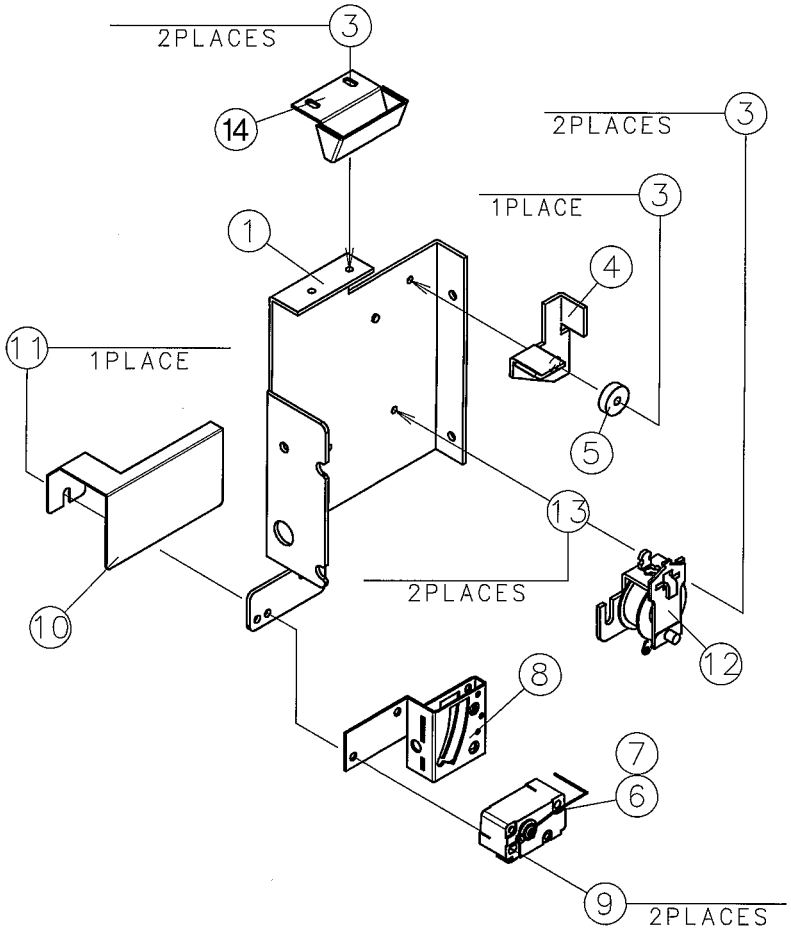

PARTS LIST

No	PARTS No.	PARTS LIST	QTY
1	E3016558A	REJECTOR HOLDER	3
2	E3009953A	COIN GUIDE	3
3		WASHER HD TAP TIGHT-S-(CHROMATE) 3X8	11
4	E3012094A	CANCEL LEVER	3
5	E1001508A	SPACER	3
6	C0200557A	MICRO SWITCH D2MC-01E	3
7	C0300022A	ACTUATOR	3
8	E3013243A	M.S. COIN GUIDE LARGE	3
9		PAN HD SCREW-(CHROMATEM3X25	6
10	E3000180A	ACTUATOR COVER	3
11		FLANGE NUT-(CHROMATE) M3	3
12	C1101422A	COIN LOCKOUT COIL-(DC12V) QL-102	1
13		PLAIN WASHER-(BLACK CHROMATE) 4.5X18X1.6T	2
14	E3016677A	COIN GUIDE—(HK5$)	1
15			
16			
17			
18			
19			
20			
21			
22			
23			
24			
25			

NOTE

TITLE REJECTOR DOOR ASSY

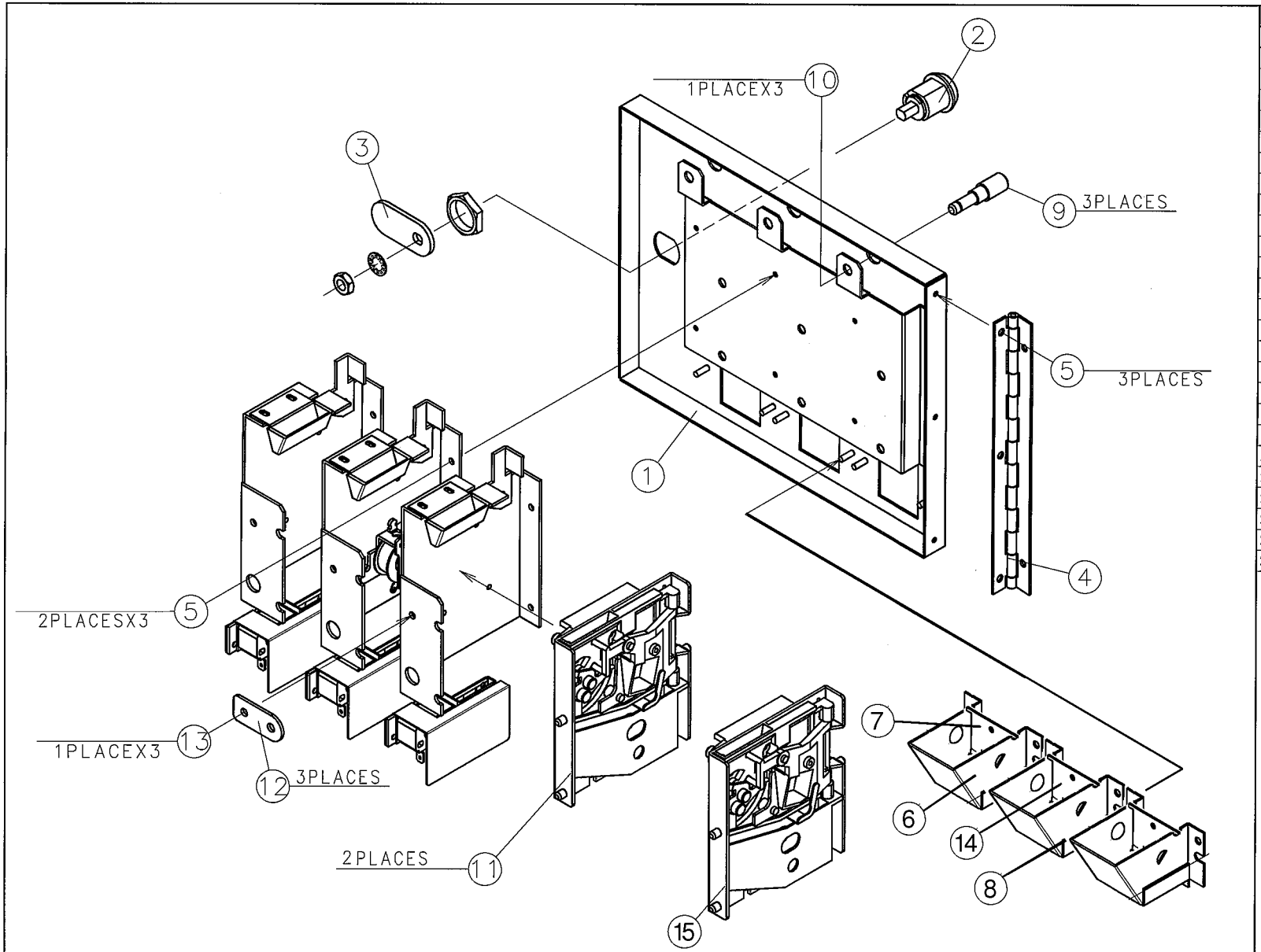

PARTS LIST			
No	PARTS No.	PARTS LIST	QTY
1	E3100625A	REJECTOR DOOR	1
2	E5000629A	LOCK & KEY-(SINGLE)-(LY1153) F750-MSDS	1
3	E3000009A	LOCK PLATE	1
4	E5060565A	DOOR HINGE	1
5		WASHER HD TAP TIGHT-S-(CHROMATE) 3X8	9
6	E3010035A	CUP	3
7	E3014448A	SHUTTER	2
8		FLANGE NUT-(CHROMATE) M3	6
9	E1000928A	CANCEL ROD	3
10		E RING-(UNICHRO) ETWJ-5	3
11	E5040122A	REJECTOR-(25CENT) AD-81P	2
12	E3013221A	REJECTOR PLATE	3
13		WING BOLT-(UNICHRO) M4X10	3
14	E3016679A	SHUTTER—(HK5$)	1
15	E5040218A	REJECTOR-(HK5$) AD-81P	1
16			
17			
18			
19			
20			
21			
22			
23			
24			
25			

NOTE

TITLE REJECTOR DOOR ASSY

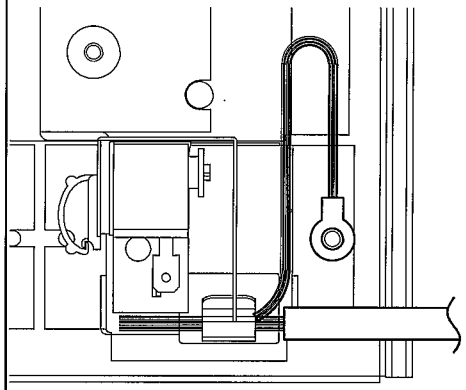

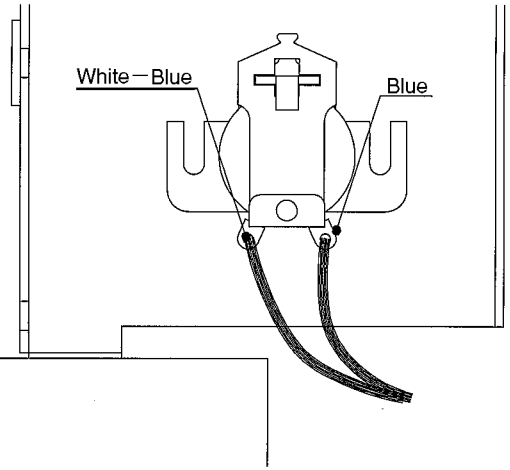

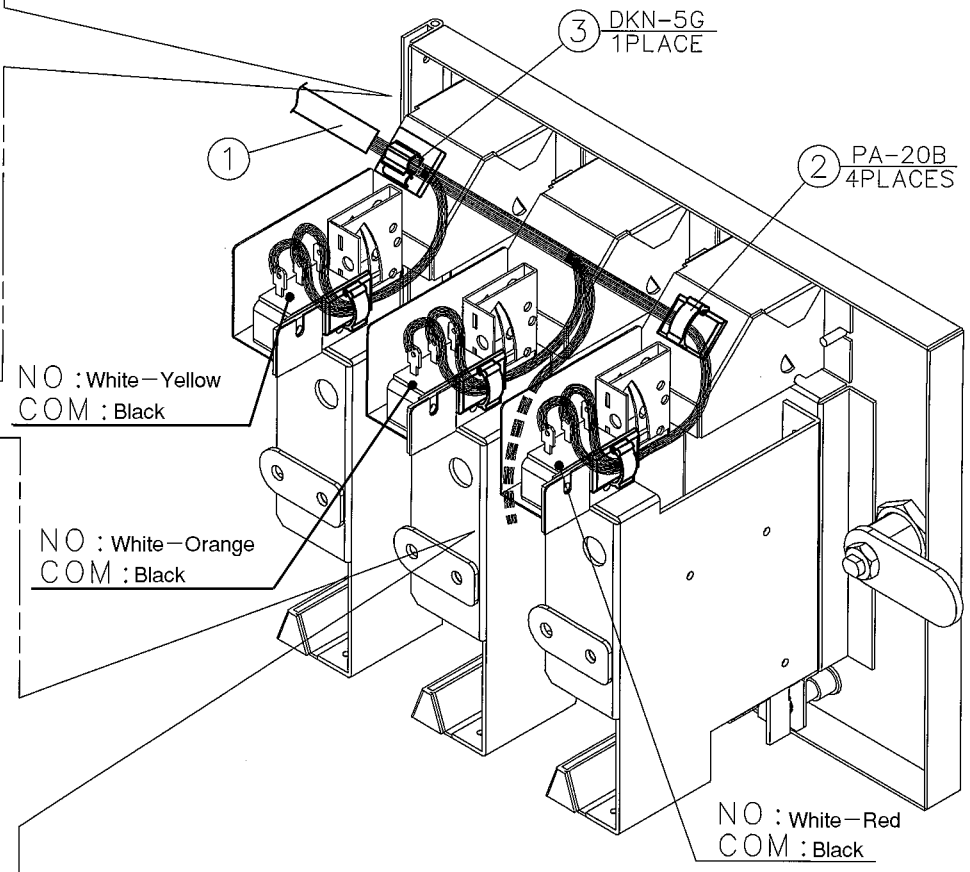

PARTS LIST			
No	PARTS No.	PARTS LIST	QTY
1	L9004822A	C HARNESS	1
2	F0100064A	PA CRAMP PA-20B	4
3	F0100069A	DK CRAMP-(17.5X19) DKN-5G	1
4			
5			
6			
7			
8			
9			
10			
11			
12			
13			
14			
15			
16			
17			
18			
19			
20			
21			
22			
23			
24			
25			

NOTE

TITLE REJECTOR DOOR ASSY

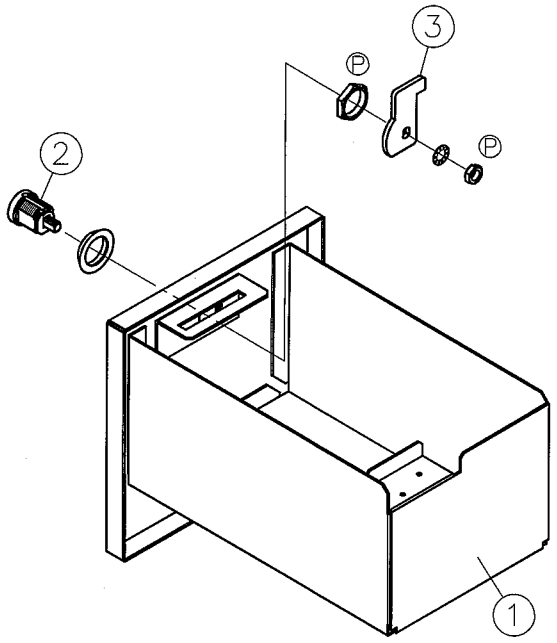

PARTS LIST

No	PARTS No.	PARTS LIST	QTY
1	E3100619A	CASH BOX	1
2	E5000632A	KIND LOCK-(LARGE RING) F830	1
3	E3015104A	LOCK PLATE (Z LOCK)	1
4			
5			
6			
7			
8			
9			
10			
11			
12			
13			
14			
15			
16			
17			
18			
19			
20			
21			
22			
23			
24			
25			

NOTE

TITLE CASH BOX ASSY

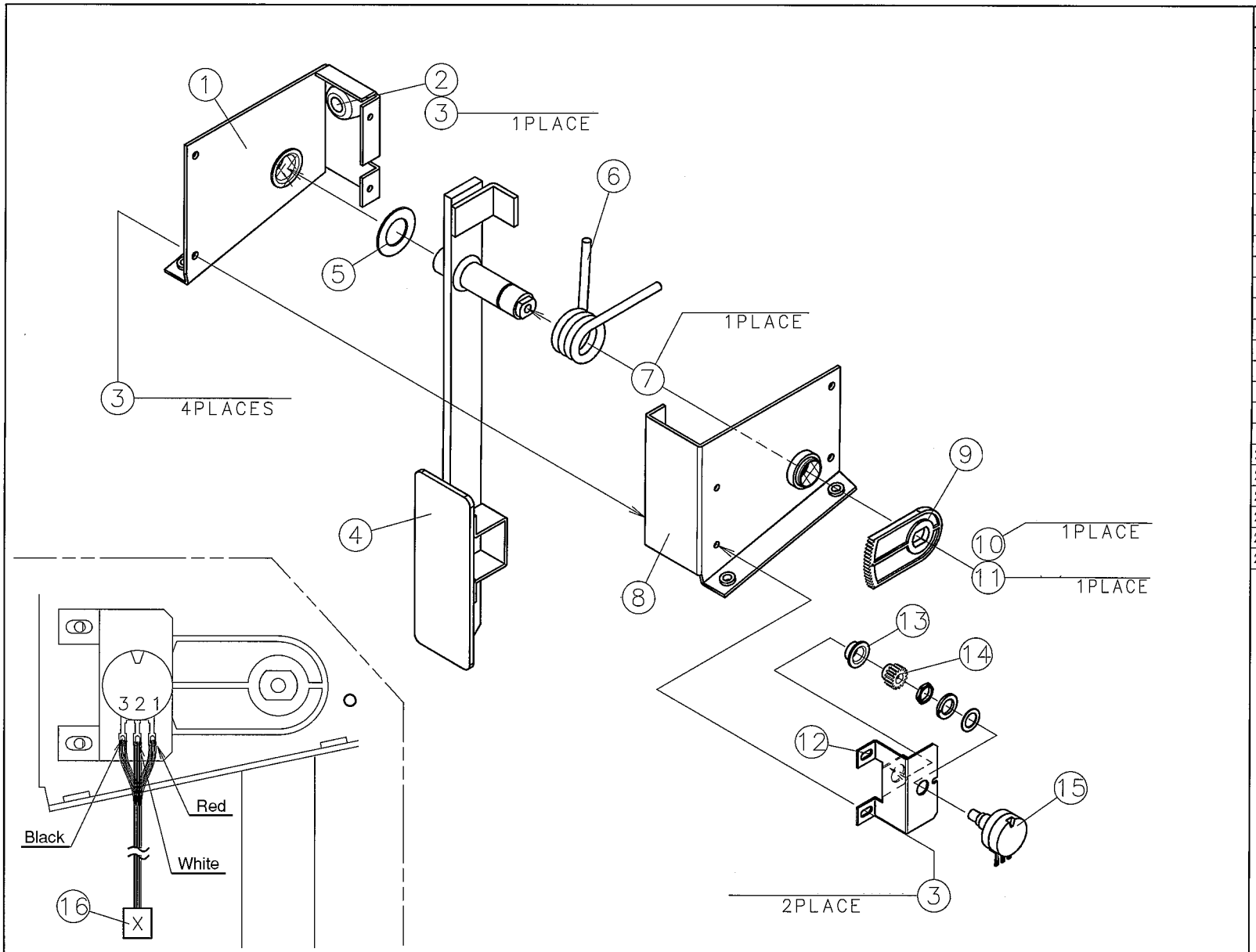

PARTS LIST			
No	PARTS No.	PARTS LIST	QTY
1	E3016555A	PEDAL BRACKET-L	1
2	F3000024A	RUBBER LEG K-24	1
3		WASHER HD TAP TIGHT-S-(CHROMATE) 4X10	7
4	E9001327A	ACCEL ARM	1
5	F9005798A	OILES WASHER #83 83W-17	1
6	E4000500A	ACCEL PEDAL SPRING	1
7		C RING STW-16	1
8	E3016556A	PEDAL BRACKET-R-(AC)	1
9	E7000132A	GEAR-A	1
10		PAN HD SEMUTH SCREW-W-(CHROMATE) M5X12	1
11		PLAIN WASHER-(BLACK CHROMATE) 5.5X22X1.6T	1
12	E3015505A	VR BRACKET-(PEDAL)	1
13	F9001798A	OILES #80 FLANGE BUSH-(D=9) 80F-0905	1
14	F9004234A	GEAR B	1
15	A2102541A	VARI RES.-(5KB L=20 WITH ACCESSORY) EWSW1LF20E33	1
16	L9004507A	ACCEL HARNESS	1
17			
18			
19			
20			
21			
22			
23			
24			
25			

NOTE

TITLE ACCEL PEDAL ASSY

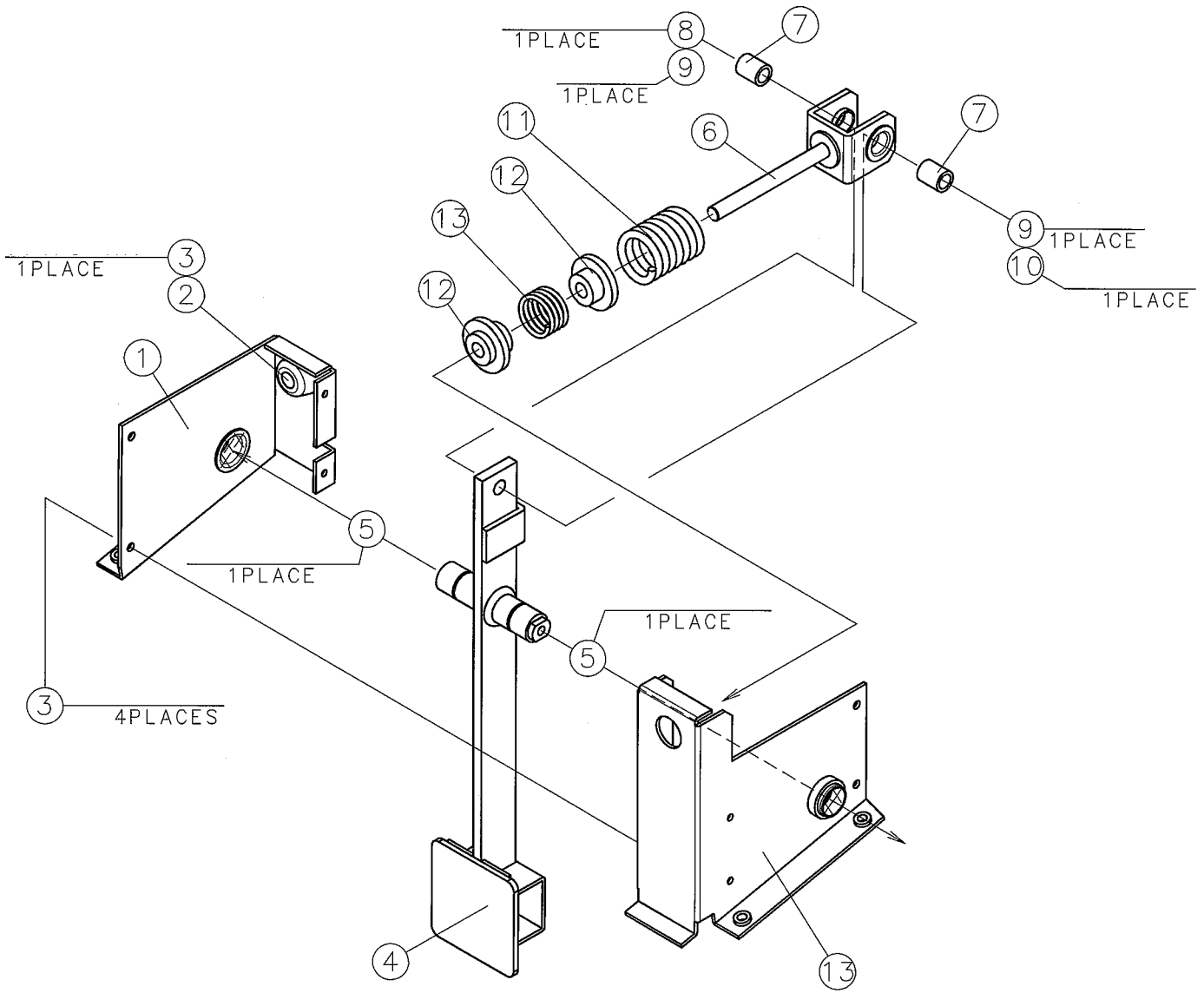

PARTS LIST

No	PARTS No.	PARTS LIST	QTY
1	E3016555A	PEDAL BRACKET-L	1
2	F3000024A	RUBBER LEG K-24	1
3		WASHER HD TAP TIGHT-S-(CHROMATE) 4X10	5
4	E9001328A	BRAKE ARM	1
5		C RING STW-16	2
6	E9001014A	SPRING ROD	1
7	E1001437A	ROD COLLAR	2
8		SOCKET CAP BOLT-(TEMPER) M8X50	1
9		PLAIN WASHER-(CHROMATE) 8	2
10		SELF LOCKING NUT-U-(UNICHRO) M8	1
11	E4000687A	BRAKE SPRING-H	1
12	F9005803A	SPRING STOPPER	2
13	E4000688A	BRAKE SPRING-S	1
14	E3016557A	PEDAL BRACKET-R-(B)	1
15			
16			
17			
18			
19			
20			
21			
22			
23			
24			
25			

NOTE

TITLE BRAKE PEDAL ASSY

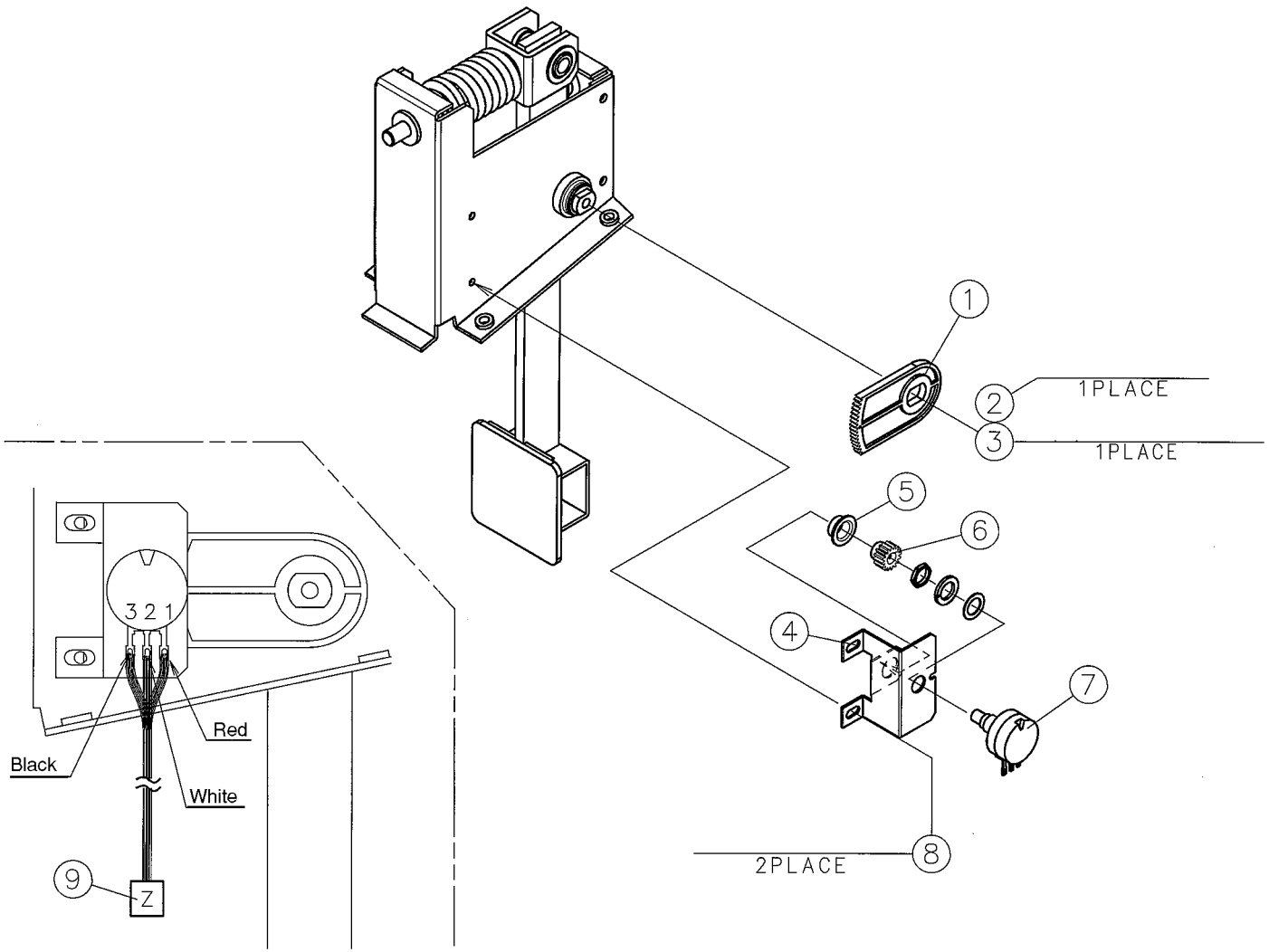

PARTS LIST

No	PARTS No.	PARTS LIST	QTY
1	E7000132A	GEAR-A	1
2		PAN HD SEMUTH SCREW-W-(CHROMATE) M5X12	1
3		PLAIN WASHER-(BLACK CHROMATE) 5.5X22X1.6T	1
4	E3015505A	VR BRACKET-(PEDAL)	1
5	F9001798A	OILES #80 FLANGE BUSH-(D=9) 80F-0905	1
6	F9004234A	GEAR B	1
7	A2102541A	VARI RES.-(5KB L=20 WITH ACCESSORY) EWSW1LF20E53	1
8		WASHER HD TAP TIGHT-S-(CHROMATE) 4X10	2
9	L9004509A	BRAKE HARNESS	1
10			
11			
12			
13			
14			
15			
16			
17			
18			
19			
20			
21			
22			
23			
24			
25			

NOTE

TITLE BRAKE PEDAL ASSY

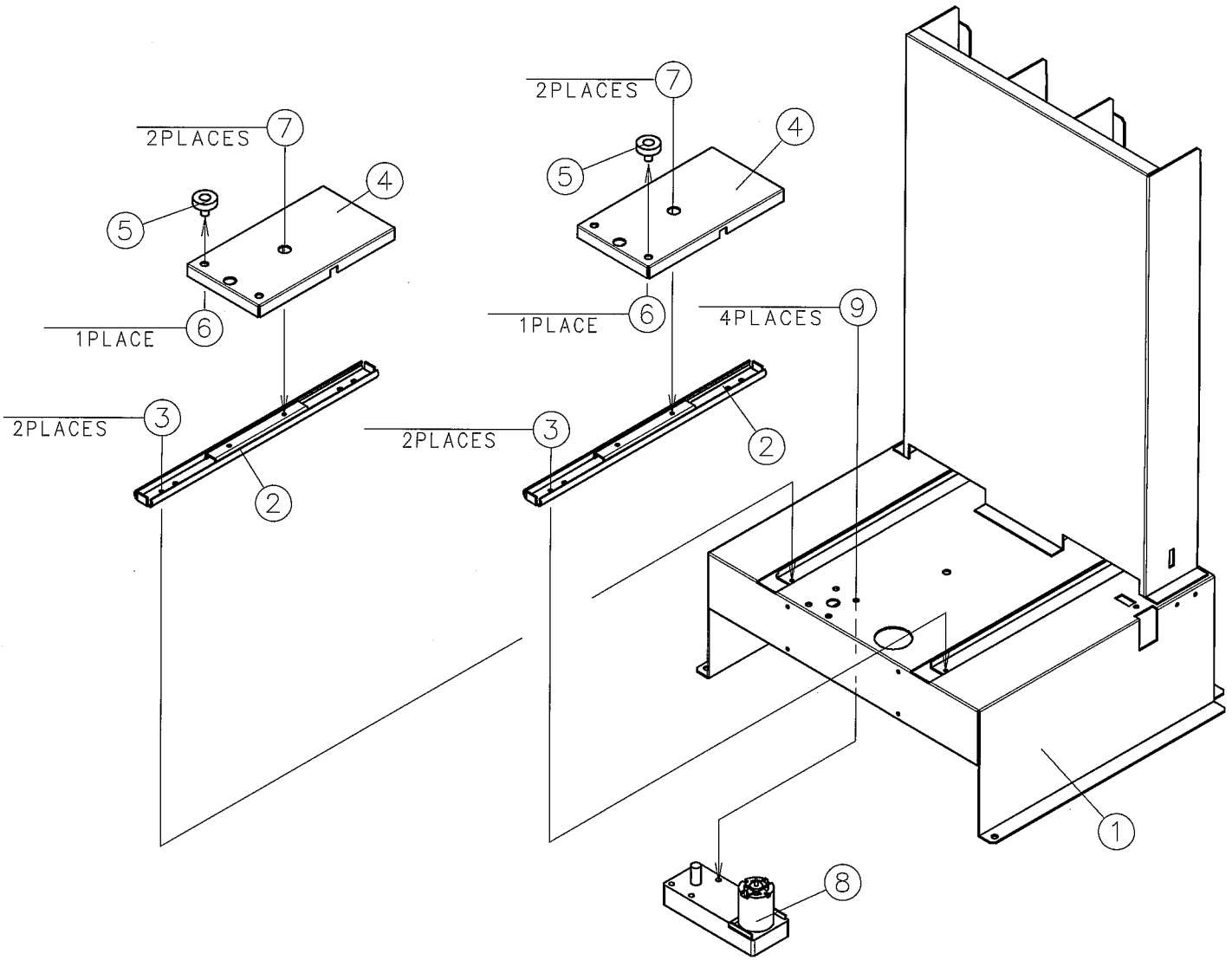

PARTS LIST			
No	PARTS No.	PARTS LIST	QTY
1	E3100634A	VENDER BASE	1
2	E5060535A	SLIDE RAIL 1790-250	2
3		BIND HD TAP TIGHT-S-(CHROMATE) 3X8	4
4	E3016563A	SLIDER	2
5	E6000255A	DERURIN BEARING-(D=19)-(M6) DR-19-B2	2
6		SELF LOCKING NUT-U-(UNICHRO) M6	2
7		PAN HD SEMUTH SCREW-W-(CHROMATE) M3X6	4
8	C1200494A	DC GEARED MOTOR-(12V)-(HOLE) TG-47C-VG-230-KA 12V	1
9		PAN HD SEMUTH SCREW-W-(CHROMATE) M4X8	4
10			
11			
12			
13			
14			
15			
16			
17			
18			
19			
20			
21			
22			
23			
24			
25			

NOTE

TITLE VENDER MECHA ASSY

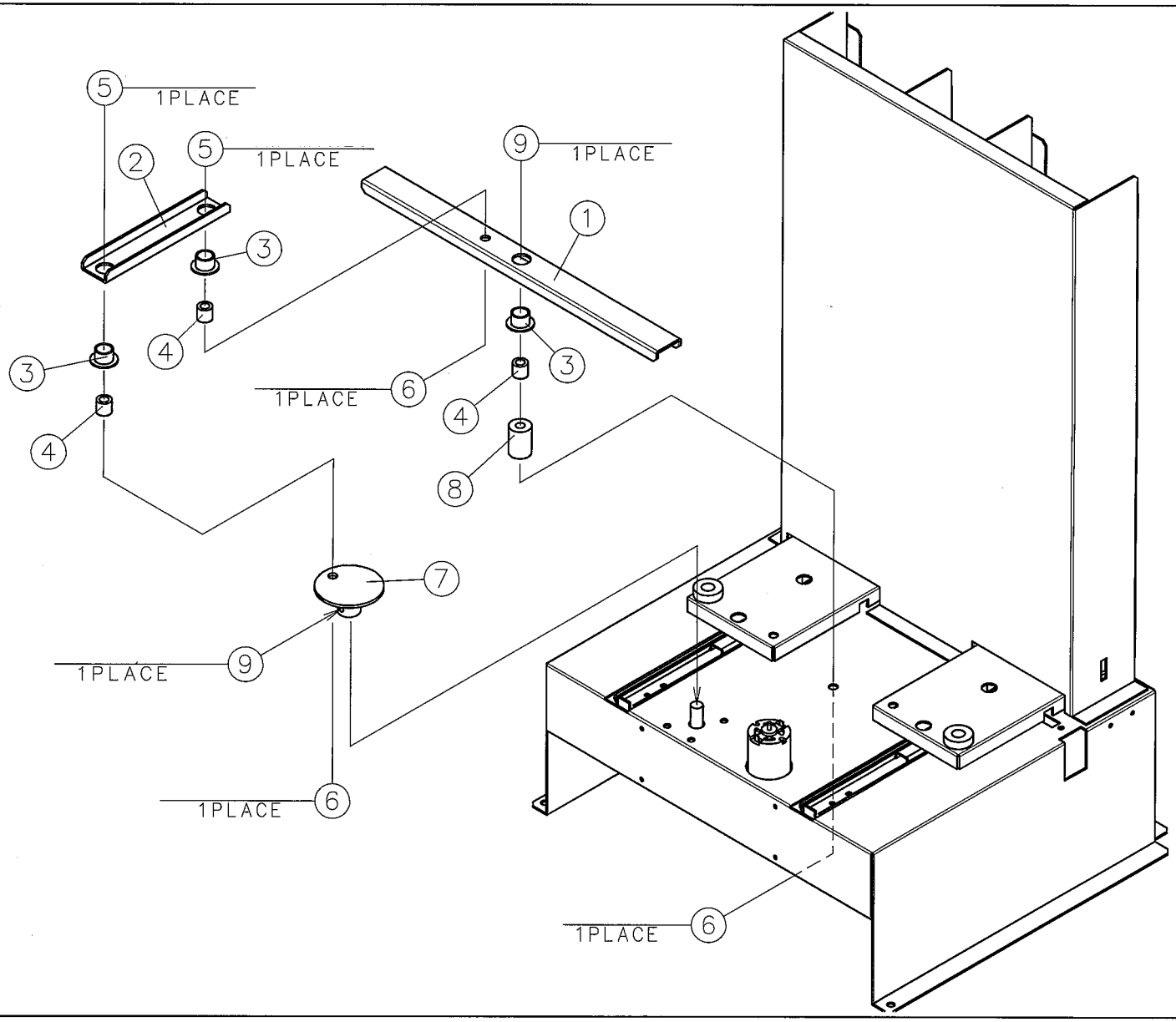

PARTS LIST			
No	PARTS No.	PARTS LIST	QTY
1	E3016569A	SWING ARM	1
2	E3016552A	LINK ARM	1
3	F9005567A	OILES #80 FLANGE BUSH-(D=10) 80F-1008	3
4	E1001830A	SPACER 6.1X10X9.5	3
5		PAN HD SEMUTH SCREW-W-(CHROMATE) M6X20	2
6		SELF LOCKING NUT-U-(UNICHRO) M6	3
7	E9001329A	CRANK SHAFT	1
8	E1001829A	SPACER 6.1X15X21	1
9		PAN HD SEMUTH SCREW-W-(CHROMATE) M6X45	1
10		SOCKET CAP BOLT-(TEMPER) M4X10(THREE LOCK-5MM)	1
11			
12			
13			
14			
15			
16			
17			
18			
19			
20			
21			
22			
23			
24			
25			

NOTE

TITLE VENDER MECHA ASSY

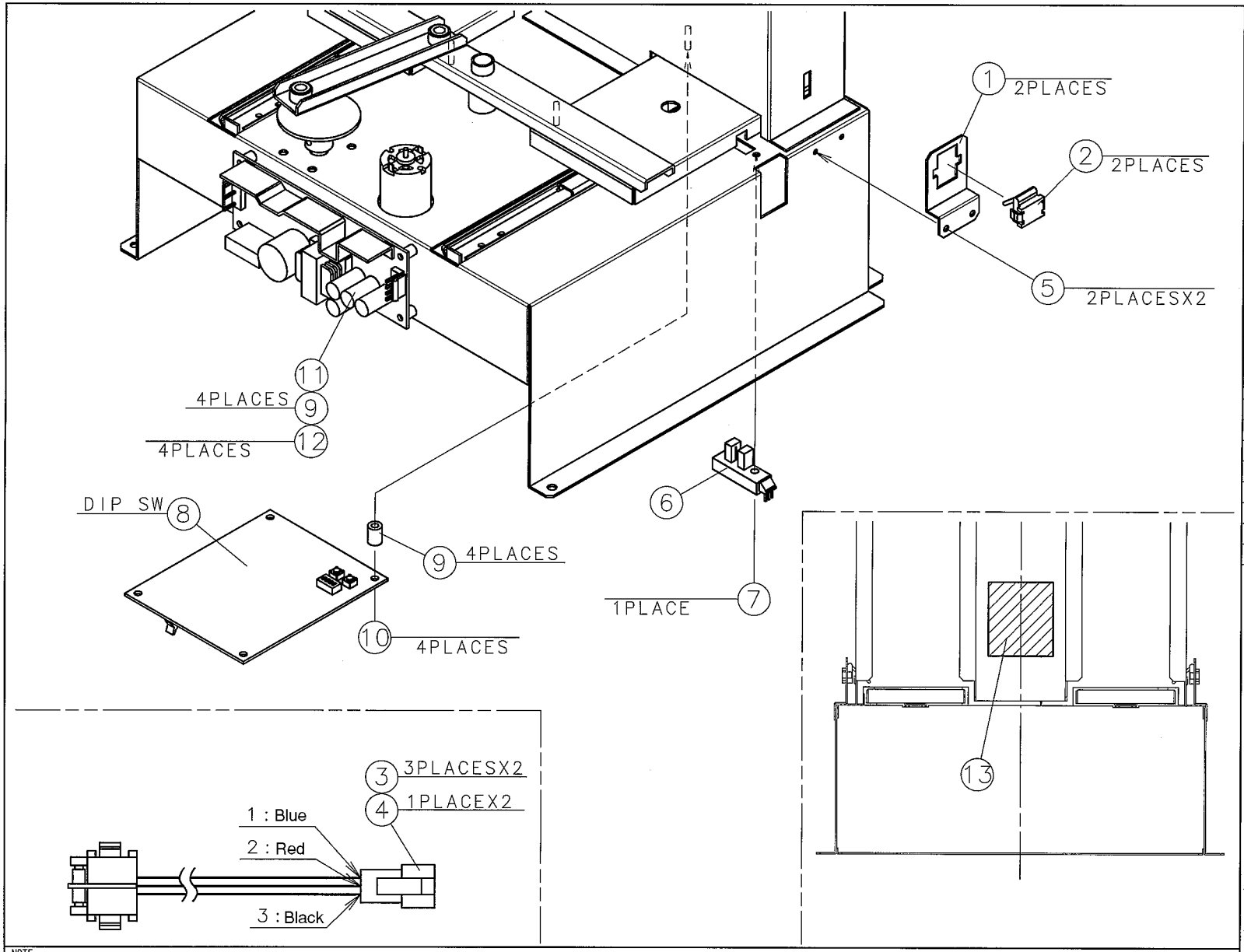

PARTS LIST

No	PARTS No.	PARTS LIST	QTY
1	E3016559A	SENSOR BRACKET-V	2
2	A9000387A	PHOTO SENSOR OS-560203-112	2
3	C0540191A	SM PIN CONTACT SYM-001T-P0.6	6
4	C0530630A	SM CONN.-(3P RECEPTACLE/S) SMR-03V-N	2
5		WASHER HD TAP TIGHT-S-(CHROMATE) 3X8	4
6	A9000281A	PHOTO INTERRUPTER GP1A23LC	1
7		WASHER HD TAP TIGHT-S-(CHROMATE) 4X12	1
8	K92X0068A	VENDOR P.C.B.ASSY BATTLE GEAR 3	1
9	F9000851A	PLASTIC SPACER 3X6X8	8
10		FLANGE NUT-(CHROMATE) M3	4
11	M1300049A	SWITCHING REGULATOR VS30C-12	1
12		WASHER HD TAP TIGHT-S-(CHROMATE) 3X16	4
13	G2501055A	SOUND INSTRUCTION STICKER - (C)	1
14			
15			
16			
17			
18			
19			
20			
21			
22			
23			
24			
25			

NOTE

TITLE VENDER MECHA ASSY

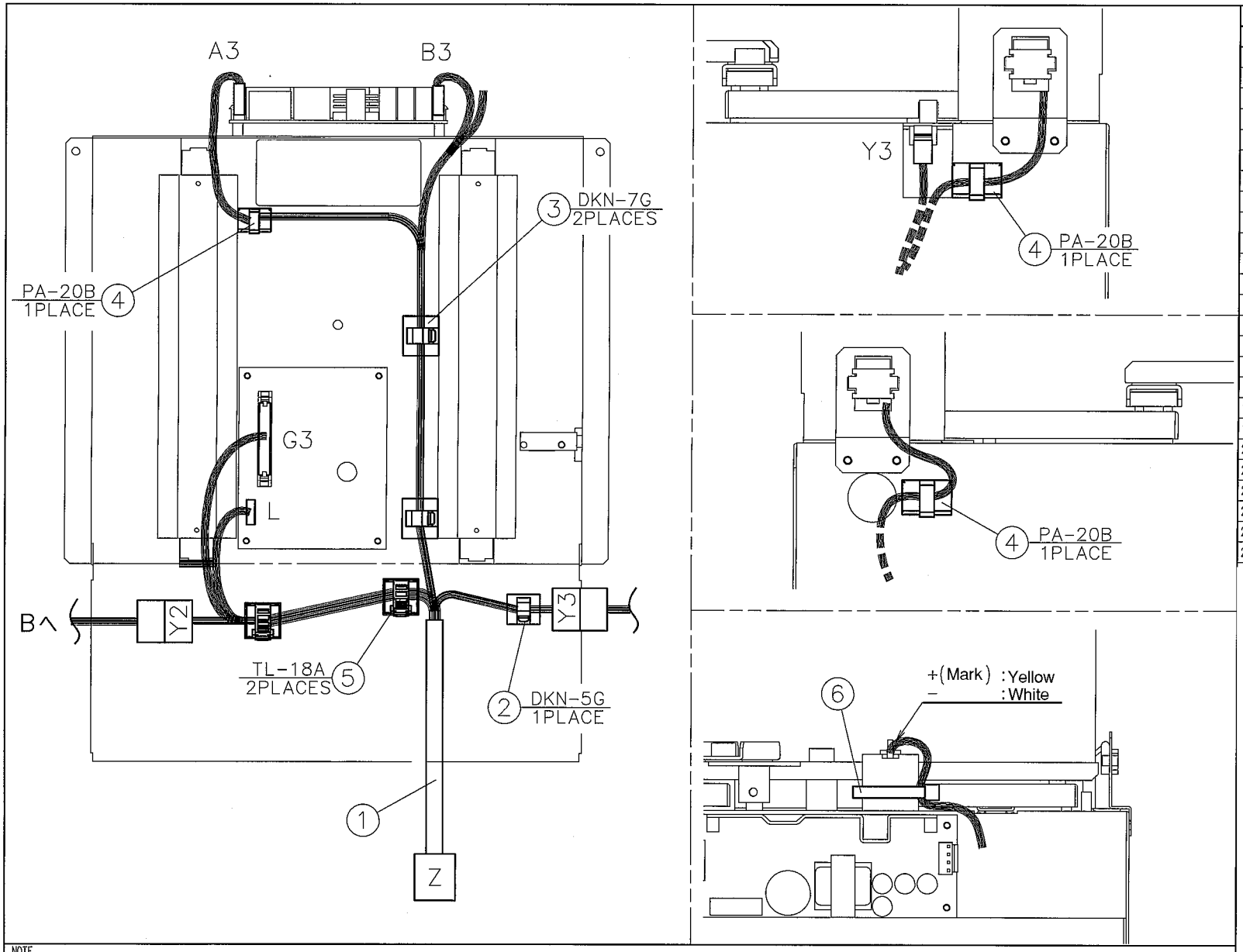

PARTS LIST

No	PARTS No.	PARTS LIST	QTY
1	L9004834A	VENDER HARNESS	1
2	F0100069A	DK CRAMP-(17.5X19) DKN-5G	1
3	F0100070A	DK CRAMP-(24X19) DKN-7G	2
4	F0100064A	PA CRAMP PA-20B	3
5	F0100068A	TL CRAMP TL-18A	2
6	F0100029A	CONVEX-(CV-150) SKB-150	1
7			
8			
9			
10			
11			
12			
13			
14			
15			
16			
17			
18			
19			
20			
21			
22			
23			
24			
25			

NOTE

TITLE VENDER MECHA ASSY

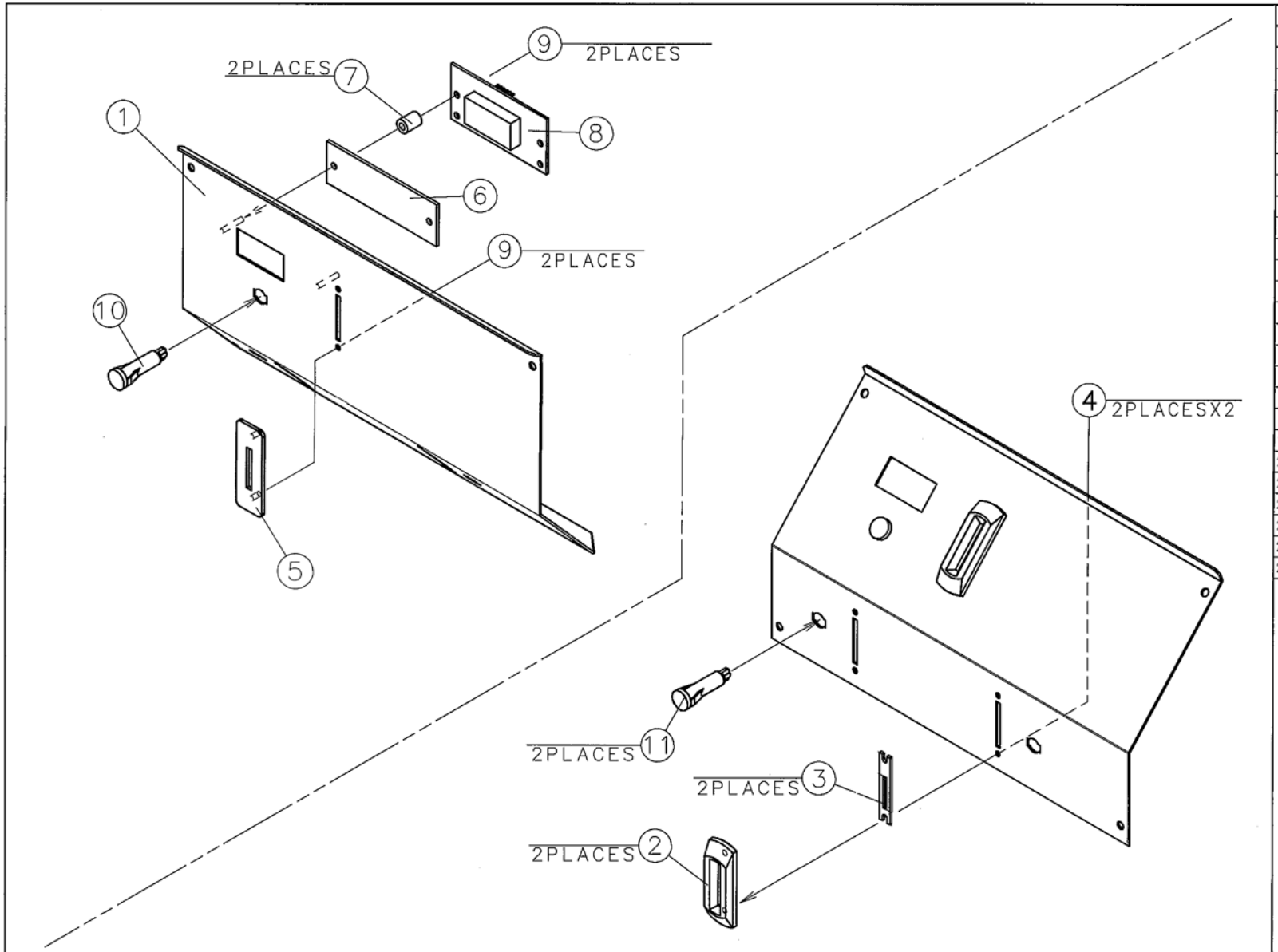

PARTS LIST			
No	PARTS No.	PARTS LIST	QTY
1	E3100690A	COIN ENTRY BRACKET - (HK) - (N)	1
2	F9004375A	COIN ENTRY MOLDING RED	2
3	E3014440A	COIN ENTRY PLATE-(25CENT)	2
4		PAN HD SEMUTH SCREW-S-(CHROMATE) M3X8	4
5	E3100689A	COIN ENTRY PLATE-(HK5$)	1
6	G9501237A	7SEG COVER	1
7	F9000851A	PLASTIC SPACER 3X6X8	2
8	K92X0069A	7SEG P.C.B.ASSY	1
9		FLANGE NUT-(CHROMATE) M3	4
10	C1400334A	LED BRACKET LAMP-(RED) DO-10AE R/C DC12V	1
11	C1400333A	LED BRACKET LAMP-(GREEN) DO-10AE G/C DC12	2
12			
13			
14			
15			
16			
17			
18			
19			
20			
21			
22			
23			
24			
25			

NOTE

TITLE COIN ENTRY ASSY

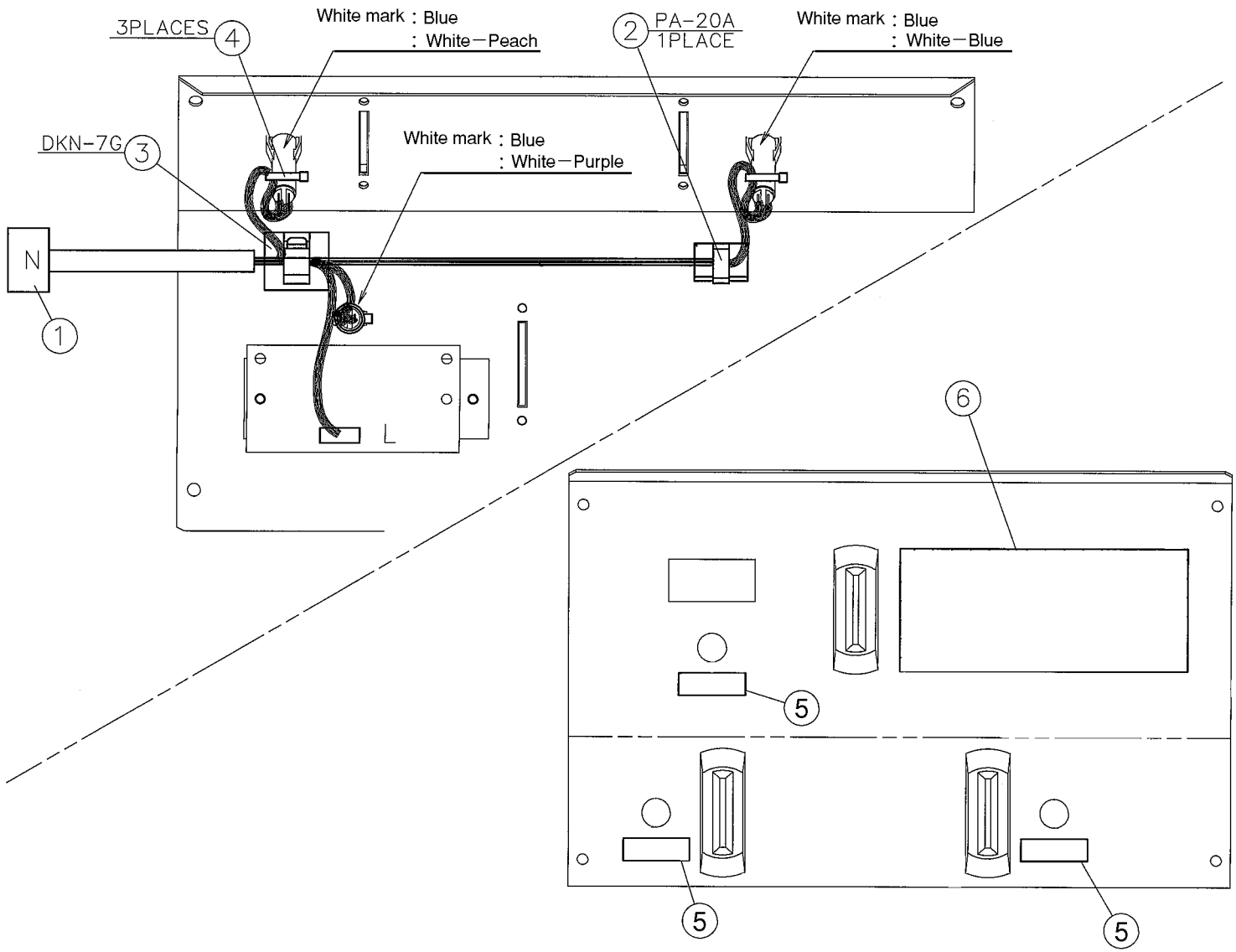

PARTS LIST

No	PARTS No.	PARTS LIST	QTY
1	L9004818A	7SEG HARNESS	1
2	F0100064A	PA CRAMP PA-20B	1
3	F0100070A	DK CRAMP-(24X19) DKN-7G	1
4	F0100028A	CONVEX-(CV-100) SKB-100	3
5	G1502049A	LED STICKER SHEET-(C)	1
6	G1502046A	COIN ENTRY STICKER-(C)	1
7			
8			
9			
10			
11			
12			
13			
14			
15			
16			
17			
18			
19			
20			
21			
22			
23			
24			
25			

NOTE

TITLE COIN ENTRY ASSY

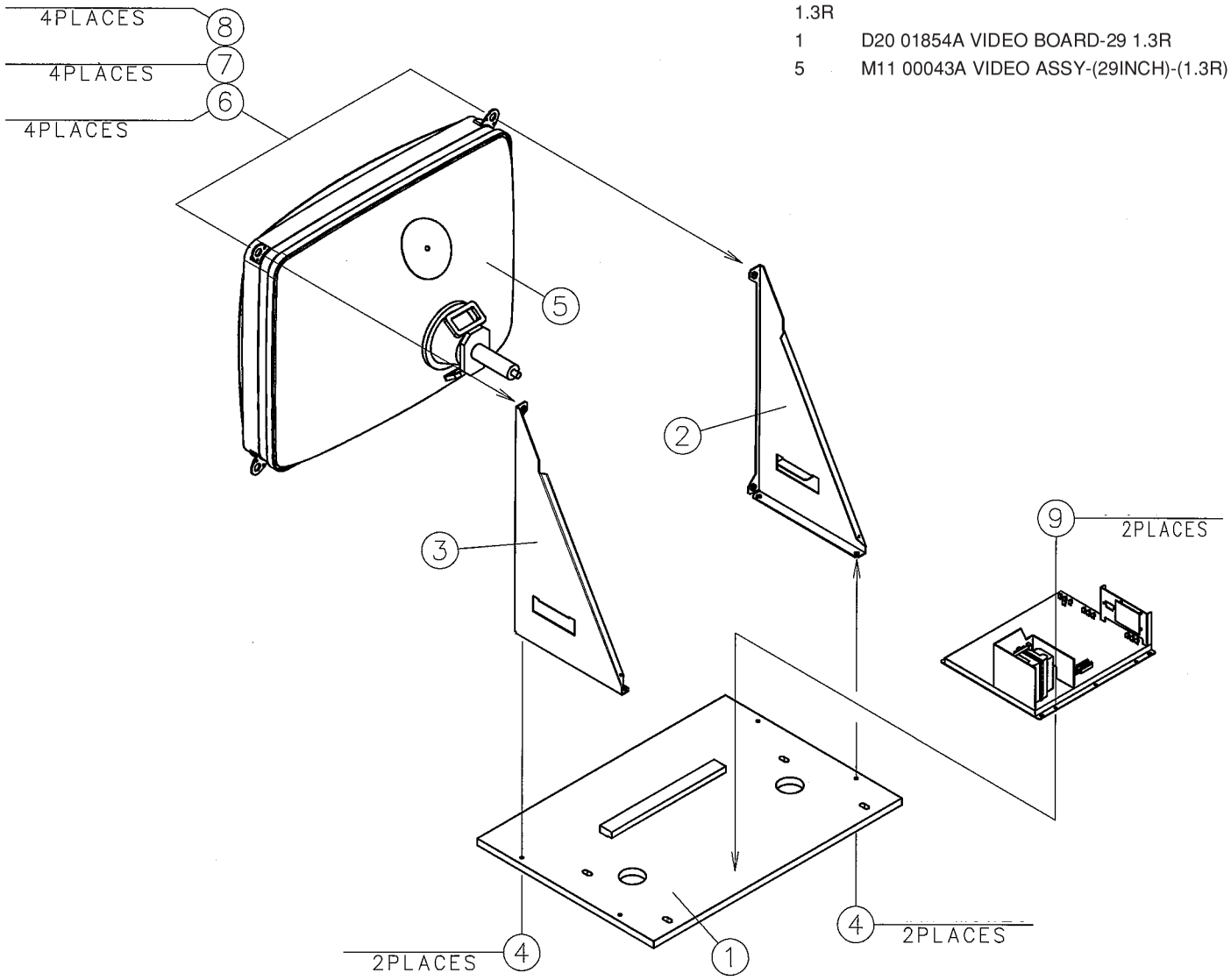

1.3R

1 D20 01854A VIDEO BOARD-29 1.3R

5 M11 00043A VIDEO ASSY-(29INCH)-(1.3R)

PARTS LIST

No	PARTS No.	PARTS LIST	QTY
1	D2001852A	VIDEO BOARD-29 1.7R	1
2	E3016574A	VIDEO BRACKET-29-L	1
3	E3016575A	VIDEO BRACKET-29-R	1
4		PAN HD SEMUTH SCREW-W-(CHROMATE) M5X20	4
5	M1100032A	VIDEO ASSY 29" TC-L292T	1
6		PLAIN WASHER-(BLACK CHROMATE) 7X22X1.6T	4
7		LOCK WASHER-(UNICHRO) 6 (IN/OUT)	4
8		SEMUTH BOLT-W-(CHROMATE) M6X16	4
9		BIND HD SELF TAP-(CHROMATE) 3.5X12-1	2
10			
11			
12			
13			
14			
15			
16			
17			
18			
19			
20			
21			
22			
23			
24			
25			

NOTE

TITLE VIDEO ASSY-29-(1.7R)-L

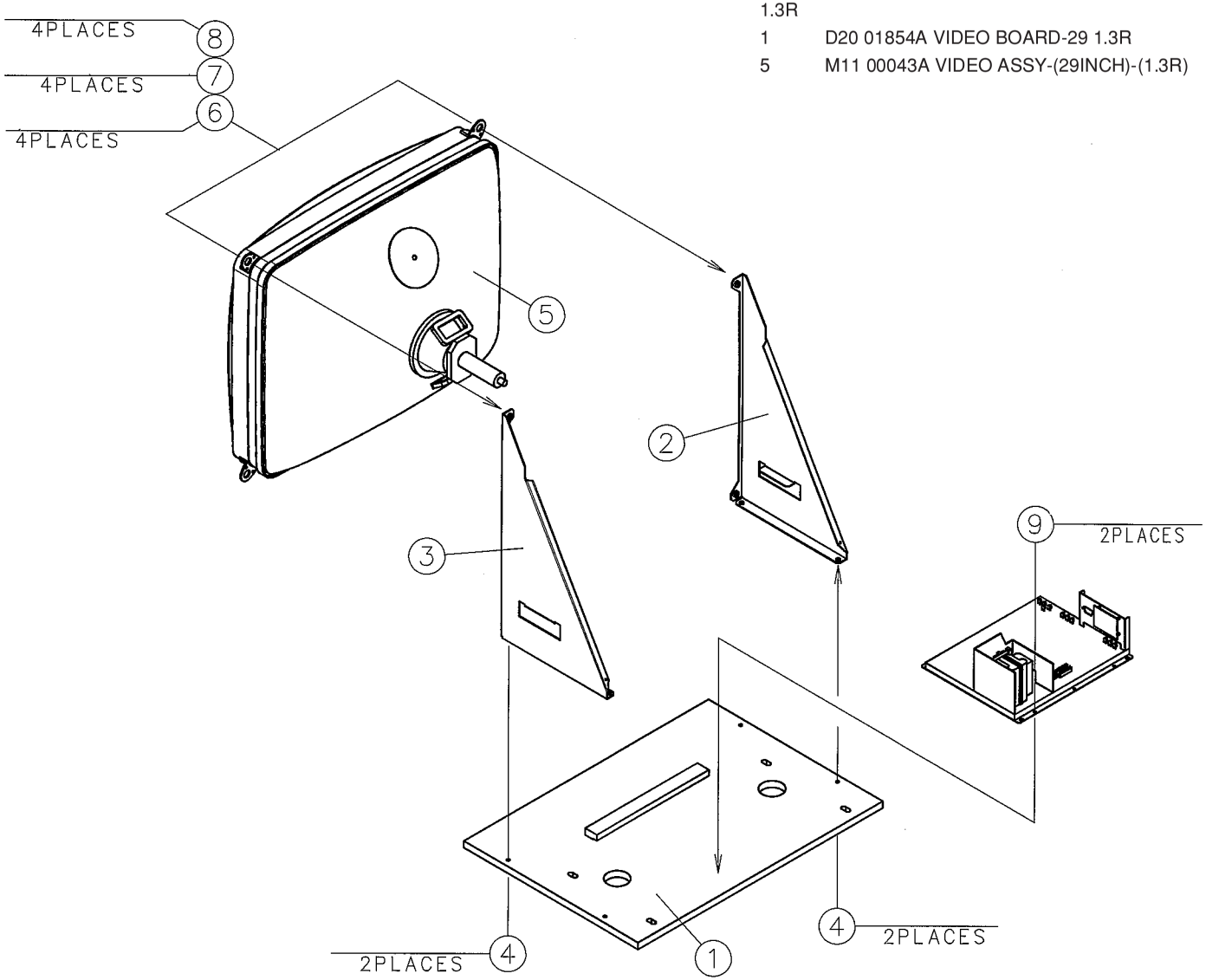

1.3R

1	D20 01854A VIDEO BOARD-29 1.3R
5	M11 00043A VIDEO ASSY-(29INCH)-(1.3R)

PARTS LIST

No	PARTS No.	PARTS LIST	QTY
1	D2001852A	VIDEO BOARD-29 1.7R	1
2	E3016574A	VIDEO BRACKET-29-L	1
3	E3016575A	VIDEO BRACKET-29-R	1
4		PAN HD SEMUTH SCREW-W-(CHROMATE) M5X20	4
5	M1100032A	VIDEO ASSY 29" TC-L292T	1
6		PLAIN WASHER-(BLACK CHROMATE) 7X22X1.6T	4
7		LOCK WASHER-(UNICHRO) 6 (IN/OUT)	4
8		SEMUTH BOLT-W-(CHROMATE) M6X16	4
9		BIND HD SELF TAP-(CHROMATE) 3.5X12-1	2
10			
11			
12			
13			
14			
15			
16			
17			
18			
19			
20			
21			
22			
23			
24			
25			

NOTE

TITLE VIDEO ASSY-29-(1.7R)-R

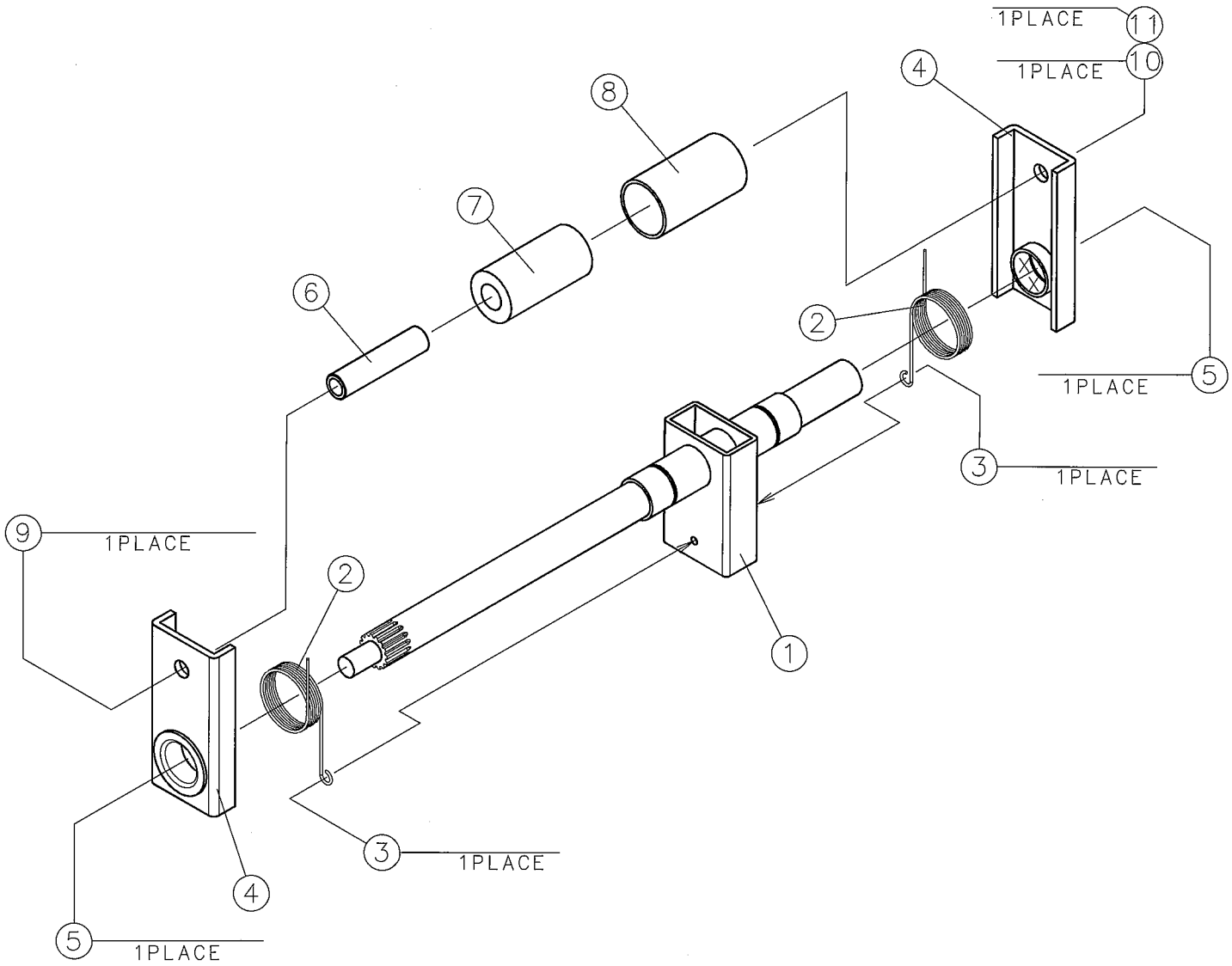

PARTS LIST

No	PARTS No.	PARTS LIST	QTY
1	E9001332A	STEERING SHAFT	1
2	E4000502A	STOPPER SPRING	2
3		WASHER HD TAP TIGHT-S-(CHROMATE) 4X10	2
4	E3012673A	STOPPER PLATE-(WITH BUSH)-(LFF-2010)	2
5		C RING STW-20	2
6	E1001438A	STOPPER SHAFT	1
7	F9003960A	CENTER STOPPER	1
8	E1001439A	STOPPER COLLAR	1
9		SOCKET CAP BOLT-(TEMPER) M8X70	1
10		SPRING WASHER-(CHROMATE) 8	1
11		SELF LOCKING NUT-U-(UNICHRO) M8	1
12			
13			
14			
15			
16			
17			
18			
19			
20			
21			
22			
23			
24			
25			

NOTE

TITLE STEERING MECHA ASSY

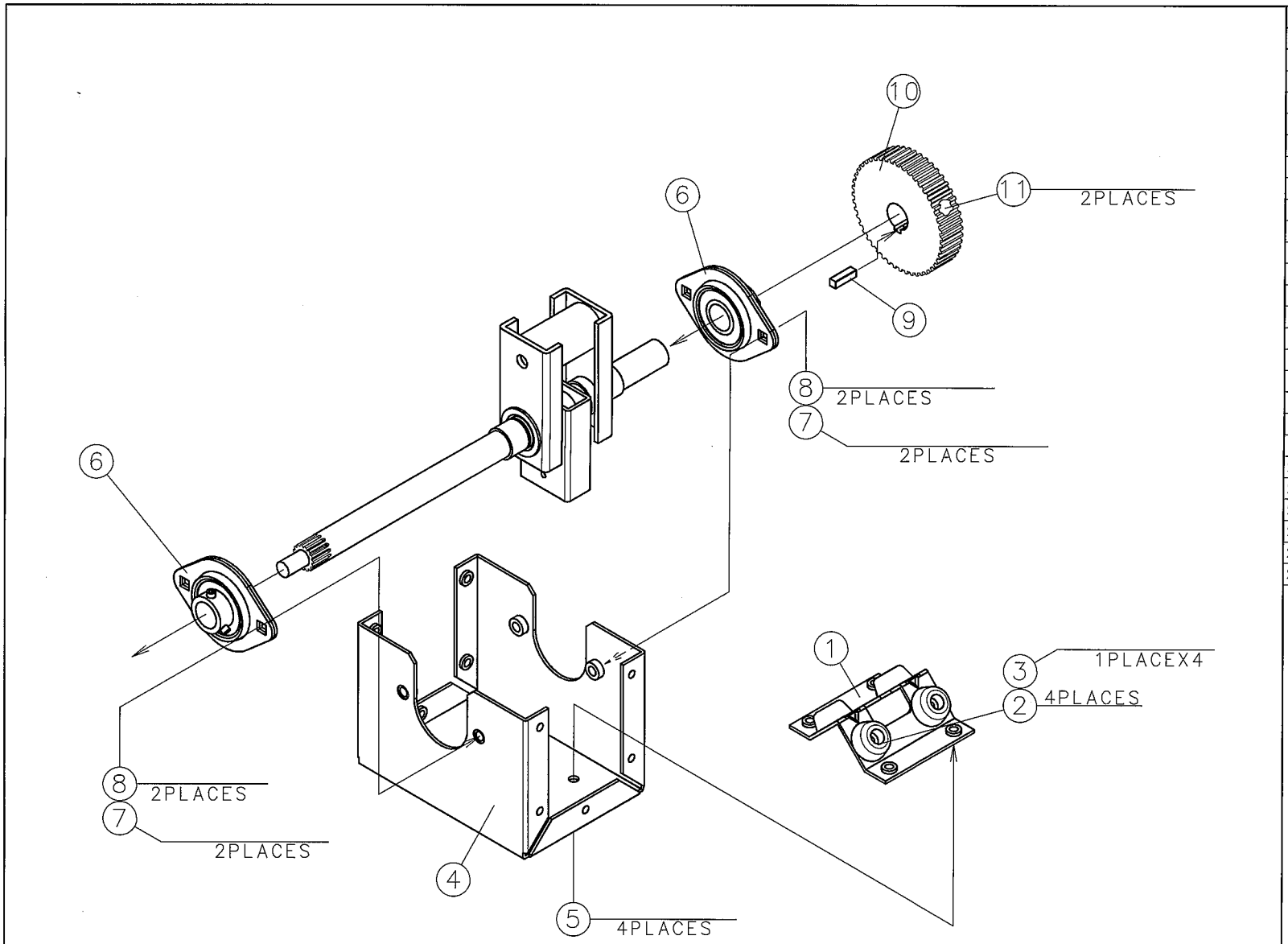

PARTS LIST			
No	PARTS No.	PARTS LIST	QTY
1	E3016568A	STOPPER BRACKET-ST	1
2	F3000024A	RUBBER LEG K-24	4
3		WASHER HD TAP TIGHT-S-(CHROMATE) 4X10	4
4	E3016566A	STEERING BRACKET	1
5		PAN HD SEMUTH SCREW-W-(CHROMATE) M5X12	4
6	E6000242A	BEARING UNIT ASPFL 203	2
7		SOCKET CAP BOLT-(TEMPER) M6X16	4
8		SPRING WASHER-(CHROMATE) 6	4
9	E1001828A	KEY 5X5X17	1
10	E7000231A	PULLEY-L	1
11		SOCKET CAP BOLT-(TEMPER) M5X20	2
12			
13			
14			
15			
16			
17			
18			
19			
20			
21			
22			
23			
24			
25			

NOTE

TITLE STEERING MECHA ASSY

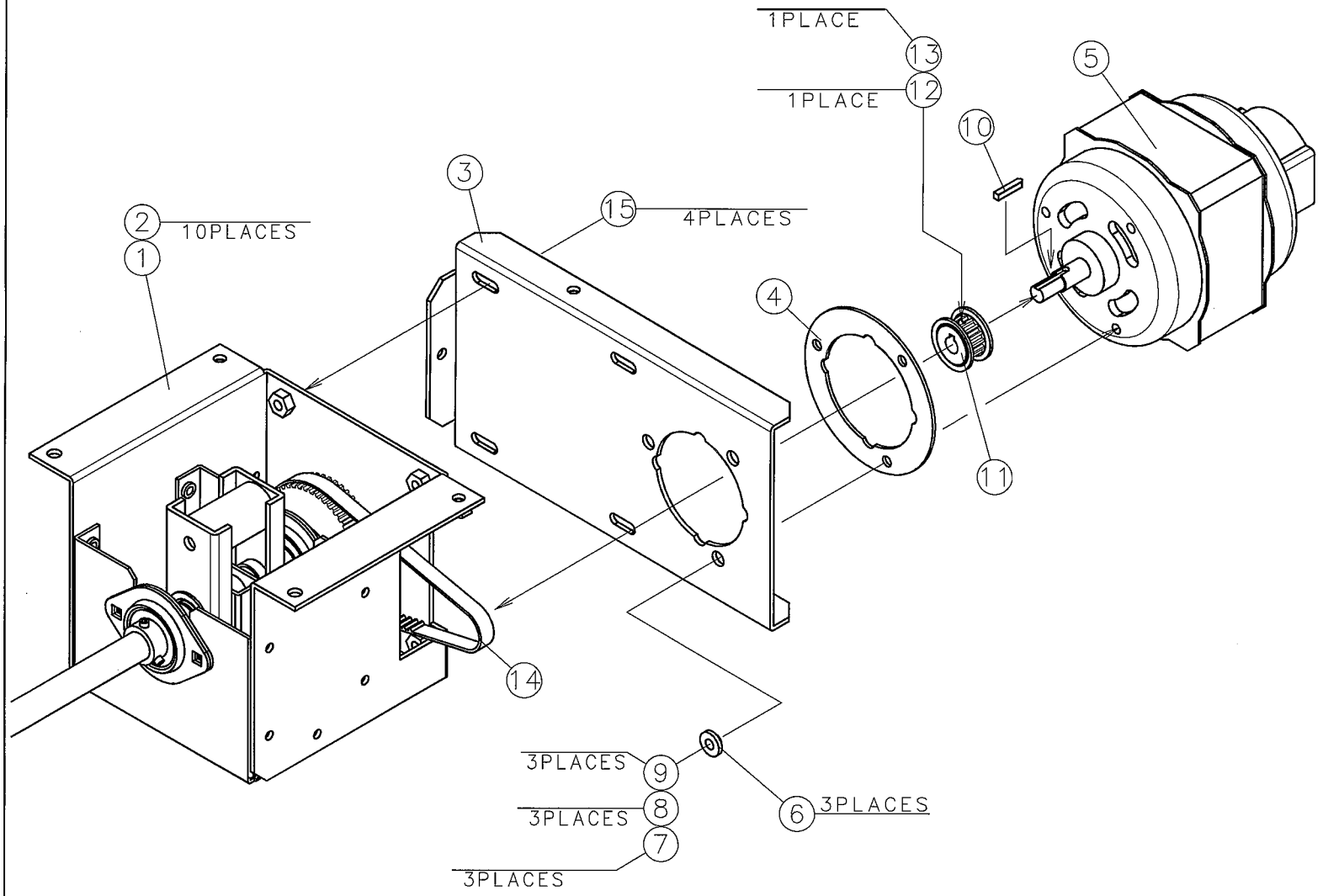

PARTS LIST			
No	PARTS No.	PARTS LIST	QTY
1	E3016565A	STEERING BASE	1
2		PAN HD SEMUTH SCREW-W-(CHROMATE) M5X12	10
3	E3016553A	MOTOR BRACKET	1
4	F9005793A	INSULATING SPACER-A	1
5	C1200483A	HANDLE MOTOR UDAF41BVTA	1
6	F9005794A	INSULATING SPACER-B	3
7		SOCKET CAP BOLT-(TEMPER) M6X16	3
8		SPRING WASHER-(CHROMATE) 6	3
9		PLAIN WASHER-(CHROMATE) 6	3
10	E1001827A	KEY 4X4X20	1
11	E7000232A	PULLEY-S	1
12		SOCKET SET SCREW-(TEMPER) M4X3 (KUBOMISAKI)	1
13		SOCKET SET SCREW-(TEMPER) M4X4 (KUBOMISAKI)	1
14	F4000097A	TIMING BELT 100S5M400	1
15		SEMUTH BOLT-W-(CHROMATE) M6X16	4
16			
17			
18			
19			
20			
21			
22			
23			
24			
25			

NOTE

TITLE STEERING MECHA ASSY

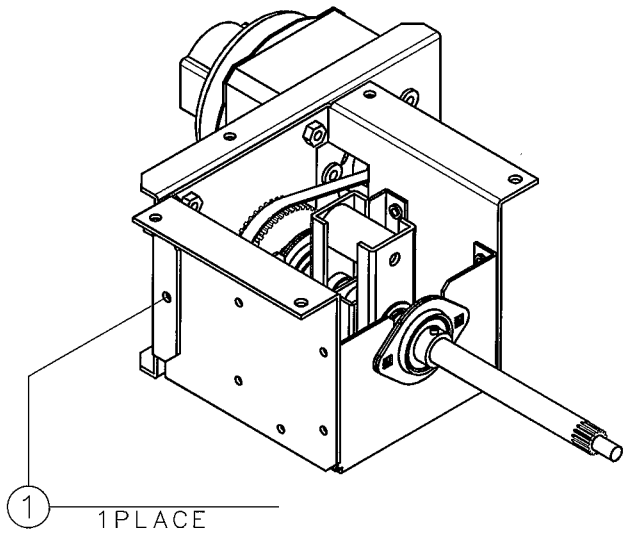

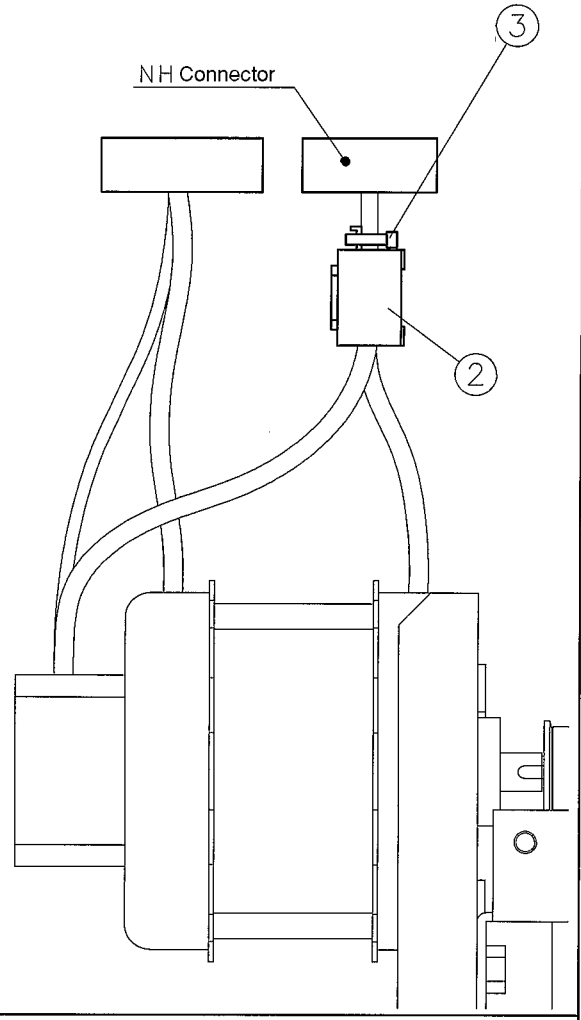

PARTS LIST

No	PARTS No.	PARTS LIST	QTY
1		PAN HD SEMUTH SCREW-W-(CHROMATE) M5X20	1
2	C1101399A	FERRITE CORE MSFC13KEX	1
3	F0100028A	CONVEX-(CV-100) SKB-100	1
4			
5			
6			
7			
8			
9			
10			
11			
12			
13			
14			
15			
16			
17			
18			
19			
20			
21			
22			
23			
24			
25			

NOTE

TITLE STEERING MECHA ASSY

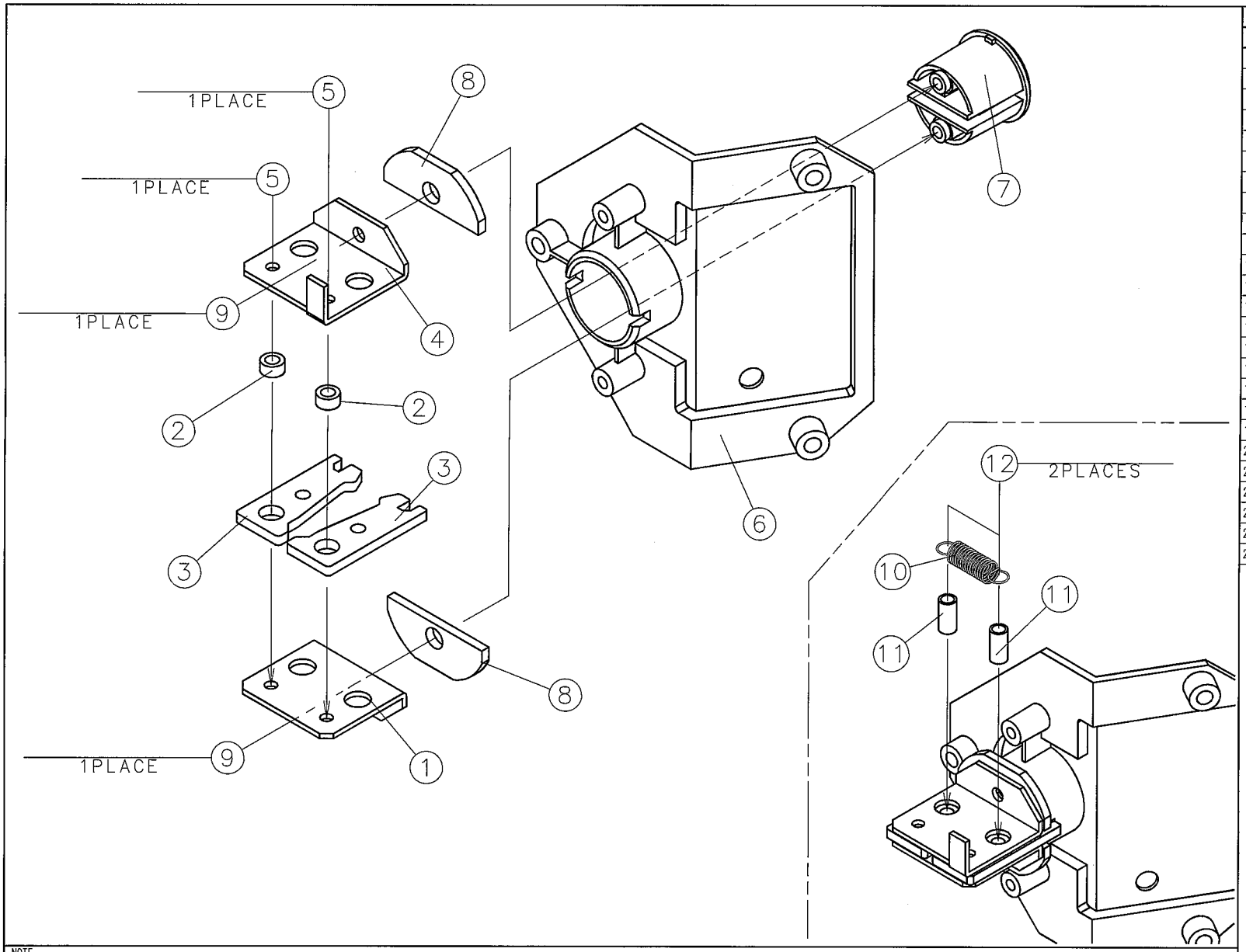

PARTS LIST			
No	PARTS No.	PARTS LIST	QTY
1	E3016548A	KEY LOCK BRACKET-A	1
2	E1001831A	SPACER 3X5X2.6	2
3	E3016550A	KEY LOCK PLATE	2
4	E3016549A	KEY LOCK BRACKET-B	1
5		WASHER HD TAP TIGHT-S-(CHROMATE) 3X8	2
6	F9005789A	CYLINDER BASE	1
7	F9005788A	CYLINDER	1
8	F9005795A	KEY LATCH	2
9		BIND HD TAP TIGHT-P-(CHROMATE) 3X10	2
10	E4000689A	KEY LOCK SPRING	1
11		SPACER-(CHROMATE) 3X8	2
12		PAN HD SEMUTH SCREW-W-(CHROMATE) M3X16	2
13			
14			
15			
16			
17			
18			
19			
20			
21			
22			
23			
24			
25			

NOTE

TITLE CYLINDER MECHA ASSY

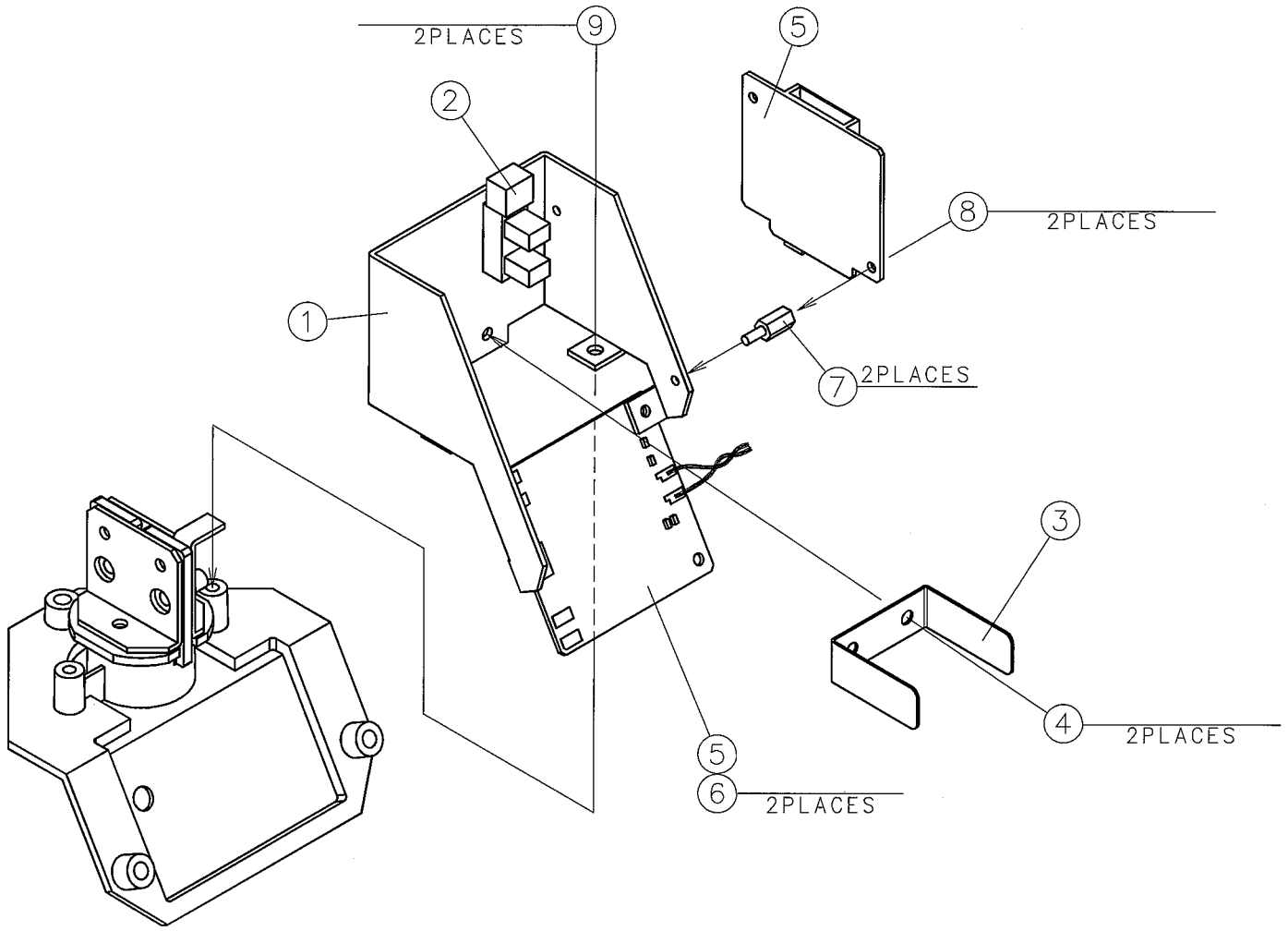

PARTS LIST

No	PARTS No.	PARTS LIST	QTY
1	E3016551A	KEY SENSOR BRACKET	1
2	A9000440A	PHOTO INTERRUPTER LG-203L	1
3	E4000690A	KEY ROTARY SPRING	1
4		WASHER HD TAP TIGHT-S-(CHROMATE) 3X8	2
5	K91X0926A	RFID READ WRITE MODULE P.C.B.ASSY V720S-HMD74T	1
6		PAN HD SCREW-(CHROMATE) M2.3X6	2
7	F9005800A	PLASTIC SPACER NUT-(2X4X7) 2MQ-7	2
8		PLASTIC SCREW M2X4	2
9		BIND HD TAP TIGHT-P-(CHROMATE) 3X10	2
10			
11			
12			
13			
14			
15			
16			
17			
18			
19			
20			
21			
22			
23			
24			
25			

NOTE

TITLE CYLINDER MECHA ASSY

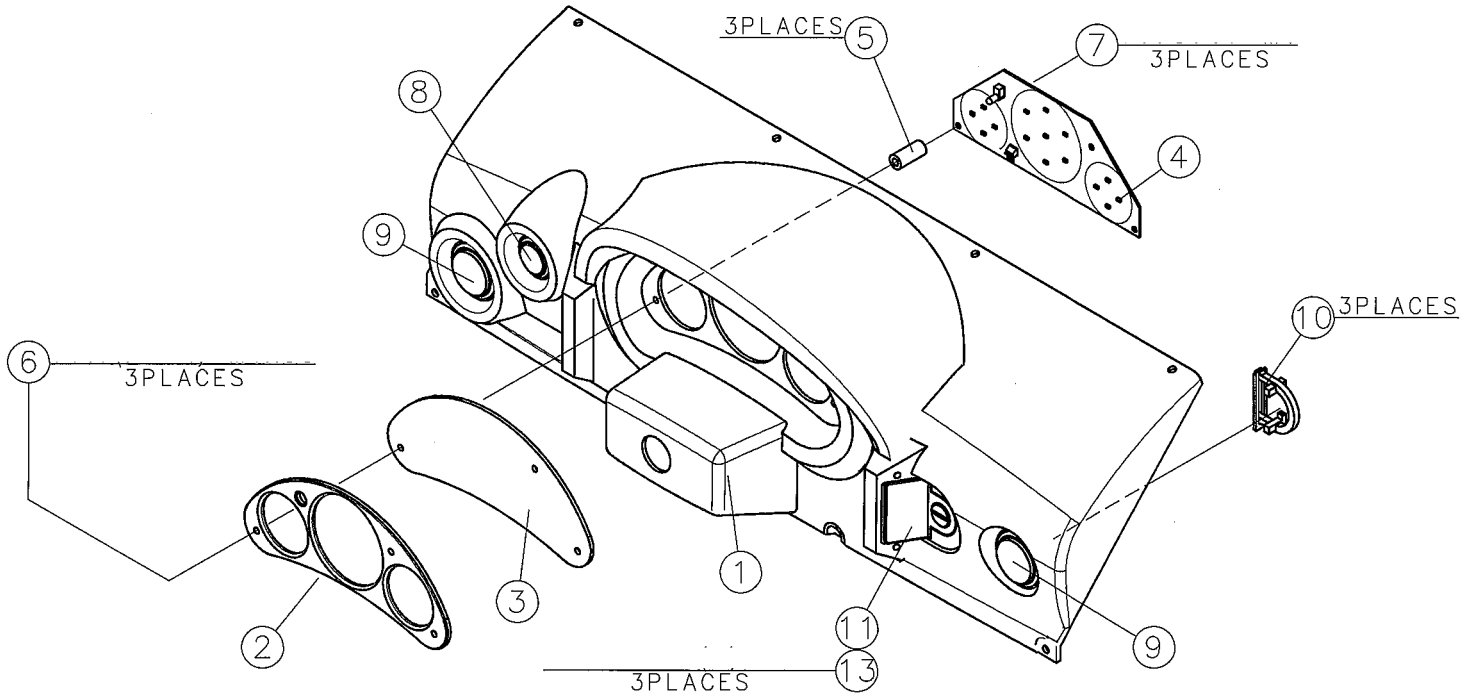

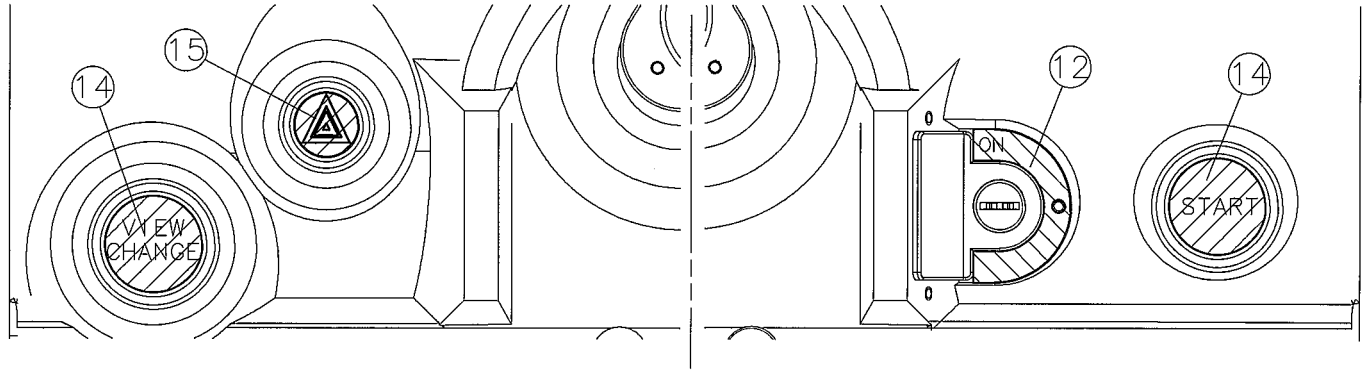

PARTS LIST

No	PARTS No.	PARTS LIST	QTY
1	F9005767A	DASHBOARD PANEL	1
2	E9100042A	METER PLATE	1
3	F9005797A	METER PANEL	1
4	K91X0952A	PANEL P.C.B.ASSY	1
5	F9000925A	PLASTIC SPACER 4X8X18	3
6		TRUSS HD SCREW-<CHROME> M4X35	3
7		FLANGE NUT-(CHROMATE) M4	3
8	C0200425A	LAMP SWITCH-(THIN TYPE)-(BODY BLACK) OBSA-30UM-W-161	1
9	C0200433A	LAMP SWITCH-(THIN TYPE)-(BODY BLACK) OBSA-45UM-W-161	2
10	F9005506A	TOMETAROU SDB-119	3
11	M9005790A	CYLINDER MECHA ASSY	1
12	G1502038A	CYLINDER STICKER	1
13		BIND HD TAP TIGHT-P-<BLACK CHROMATE> 4X10	3
14	G1501553A	BUTTON FILM SHEET	1
15	G1502039A	HAZARD BUTTON FILM	1
16			
17			
18			
19			
20			
21			
22			
23			
24			
25			

NOTE

TITLE DASHBOARD PANEL ASSY

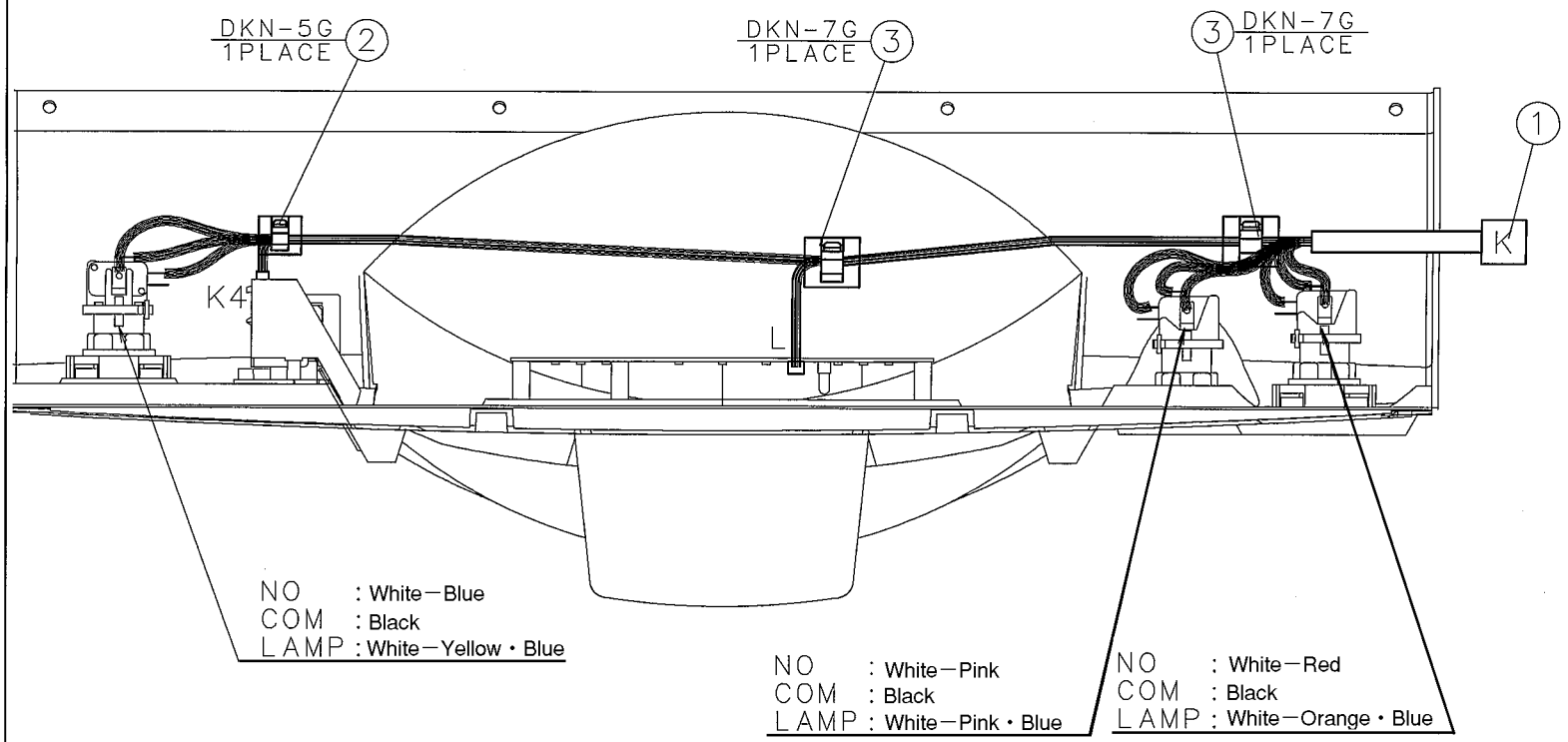

PARTS LIST

No	PARTS No.	PARTS LIST	QTY
1	L3000548A	K HARNESS	1
2	F0100069A	DK CRAMP-(17.5X19) DKN-5G	1
3	F0100070A	DK CRAMP-(24X19) DKN-7G	2
4			
5			
6			
7			
8			
9			
10			
11			
12			
13			
14			
15			
16			
17			
18			
19			
20			
21			
22			
23			
24			
25			

NOTE

TITLE DASHBOARD PANEL ASSY

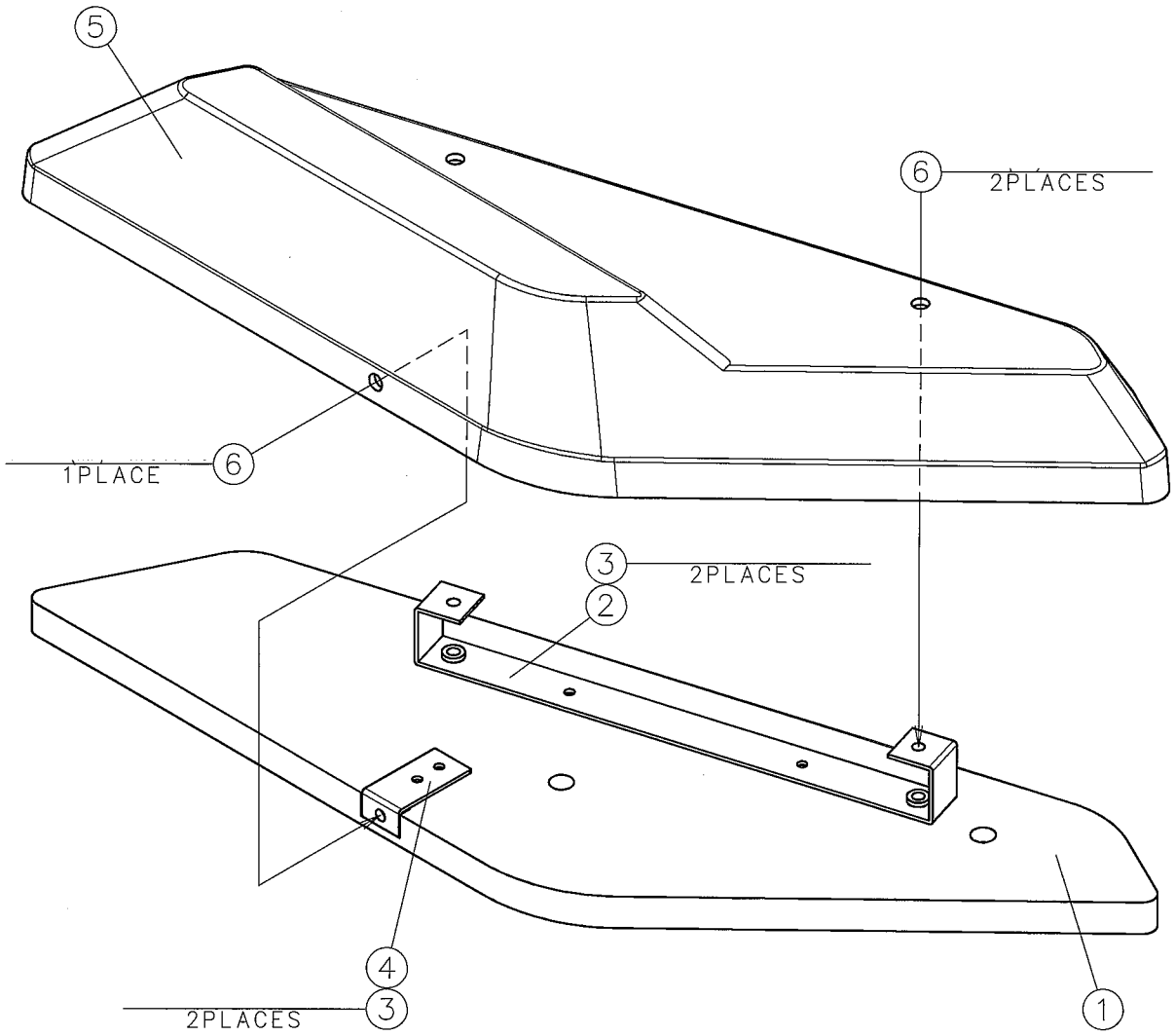

PARTS LIST

No	PARTS No.	PARTS LIST	QTY
1	D2100041A	TITLE SIDE BOARD-L	1
2	E3016573A	TITLE COVER BRACKET	1
3		BIND HD SELF TAP-(CHROMATE) 3.5X12-1	4
4	E3014292A	COVER BRACKET-S	1
5	F9005771A	TITLE SIDE COVER-L	1
6		TRUSS HD SCREW-<BLACK CHROMATE> M5X10	3
7			
8			
9			
10			
11			
12			
13			
14			
15			
16			
17			
18			
19			
20			
21			
22			
23			
24			
25			

NOTE

TITLE TITLE SIDE COVER ASSY-L

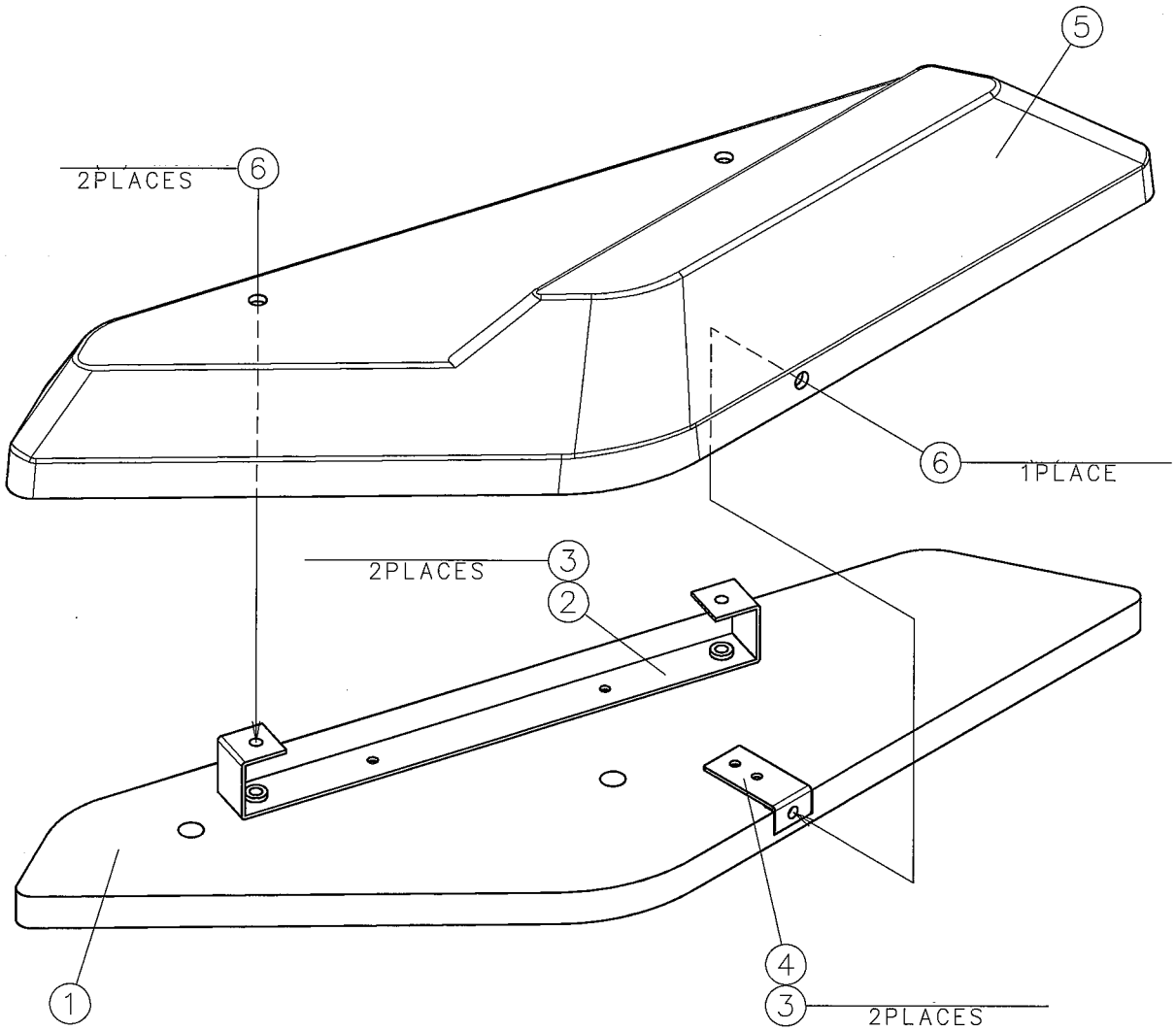

PARTS LIST

No	PARTS No.	PARTS LIST	QTY
1	D2100042A	TITLE SIDE BOARD-R	1
2	E3016573A	TITLE COVER BRACKET	1
3		BIND HD SELF TAP-(CHROMATE) 3.5X12-1	4
4	E3014292A	COVER BRACKET-S	1
5	F9005772A	TITLE SIDE COVER-R	1
6		TRUSS HD SCREW-<BLACK CHROMATE> M5X10	3
7			
8			
9			
10			
11			
12			
13			
14			
15			
16			
17			
18			
19			
20			
21			
22			
23			
24			
25			

NOTE

TITLE TITLE SIDE COVER ASSY-R

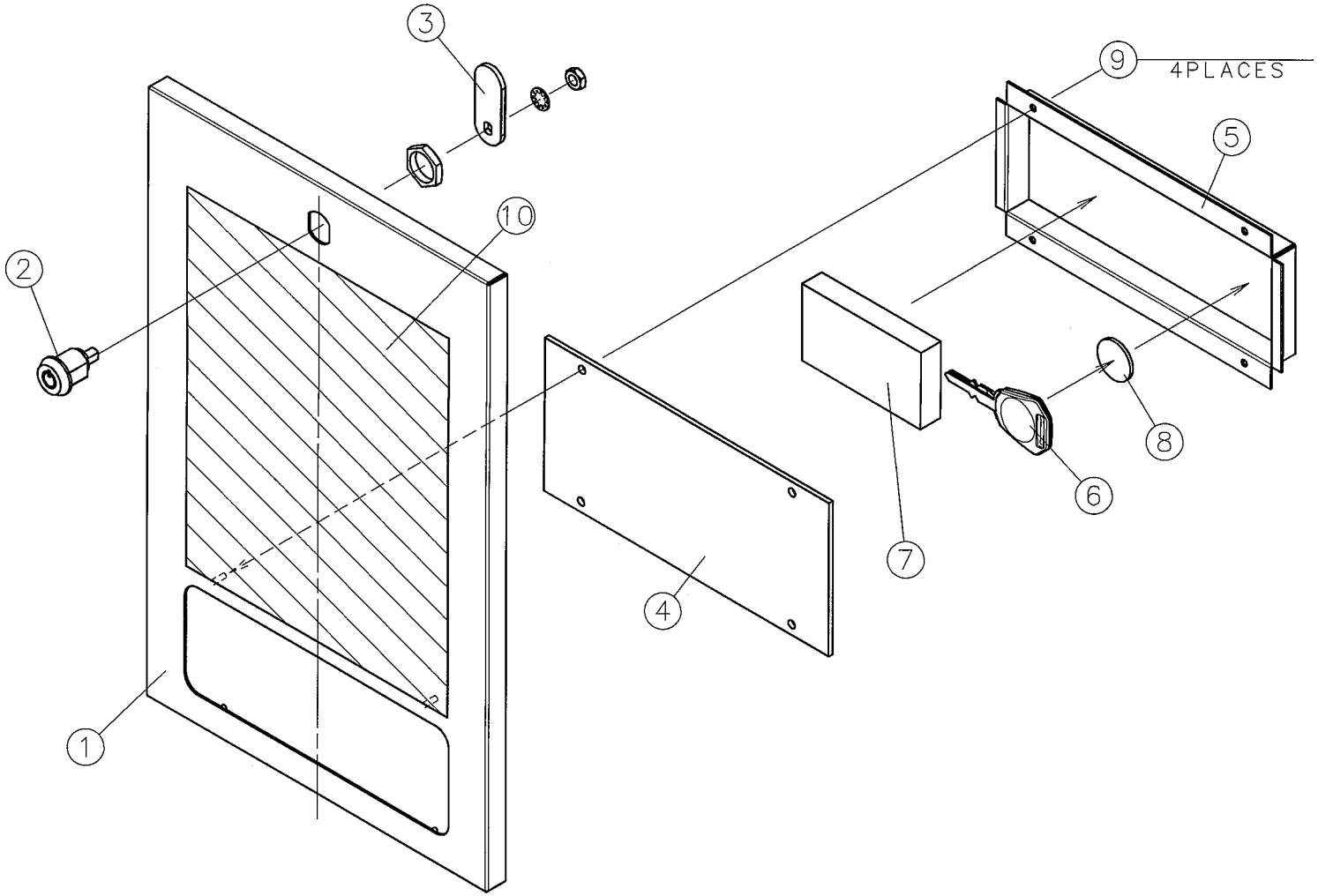

PARTS LIST

No	PARTS No.	PARTS LIST	QTY
1	E3100635A	VENDER DOOR	1
2	E5000638A	LOCK-(SINGLE)-(LY1154) F750-MSDS	1
3	E3000009A	LOCK PLATE	1
4	F9005805A	VENDER WINDOW	1
5	E3100628A	SHOWCASE	1
6	H9000688A	DISPLAY KEY-(BLACK)	1
7	H4002762A	PACKING CASE-(EXP)	1
8	F9005841A	CUSHION TAPE	1
9		FLANGE NUT-(CHROMATE) M3	4
10	G3500595A	INSTRUCTION STICKER-(C)	1
11			
12			
13			
14			
15			
16			
17			
18			
19			
20			
21			
22			
23			
24			
25			

NOTE

TITLE VENDER DOOR ASSY

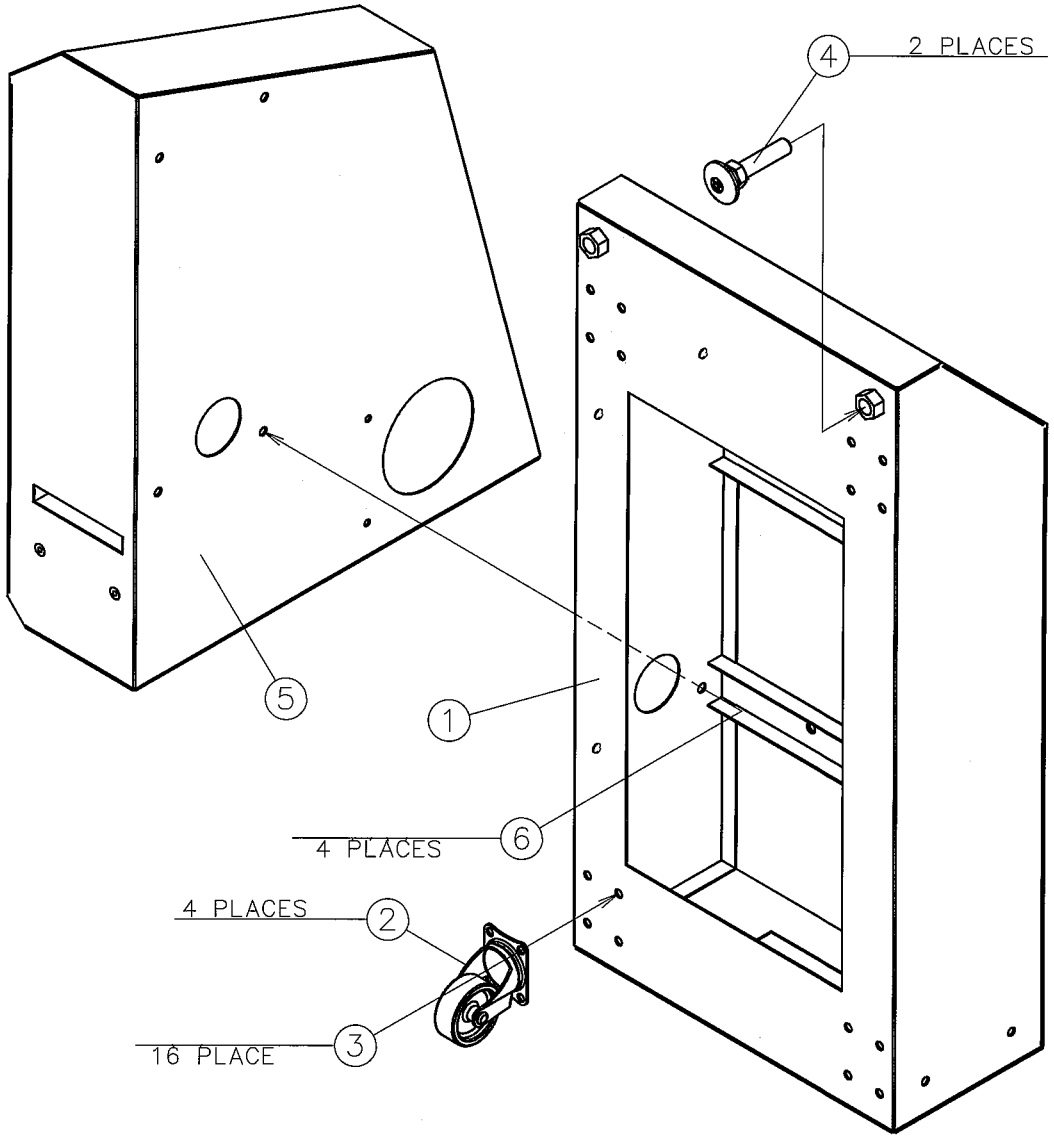

PARTS LIST

No	PARTS No.	PARTS LIST	QTY
1	E3100626A	SEAT BASE	1
2	E5060525A	CASTER 420S-N(D=65)	4
3		PAN HD SEMUTH SCREW-S M8X20	16
4	E5060529A	ADJUSTER BOLT M16-(WITH NUT)	2
5	M9005788A	CONSOLE BASE ASSY	1
6		SEMUTH BOLT-W-<BLACK CHROMATE> M8X20	4
7			
8			
9			
10			
11			
12			
13			
14			
15			
16			
17			
18			
19			
20			
21			
22			
23			
24			
25			

NOTE

TITLE SEAT CABINET ASSY

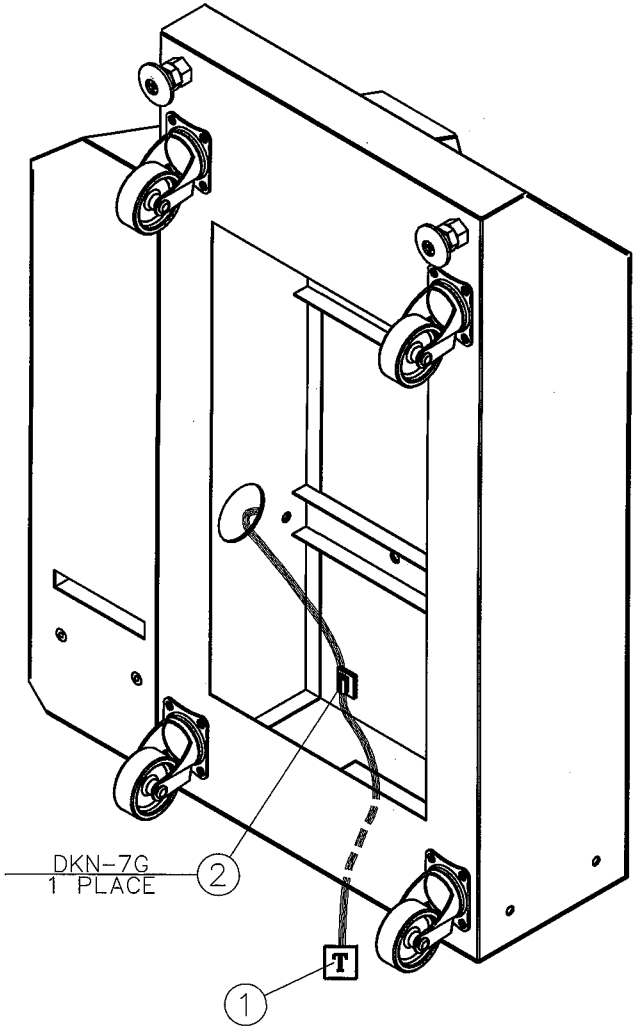

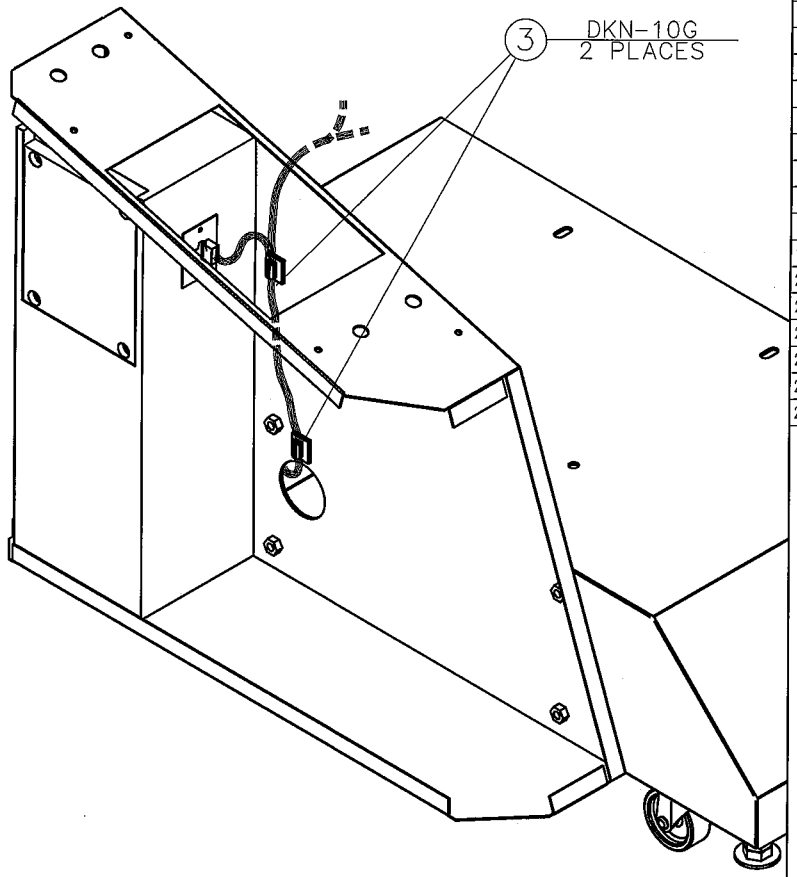

PARTS LIST			
No	PARTS No.	PARTS LIST	QTY
1	L9004825A	CONSOLE HARNESS	1
2	F0100070A	DK CRAMP-(24X19) DKN-7G	1
3	F0100071A	DK CRAMP-(30X21) DKN-10G	2
4			
5			
6			
7			
8			
9			
10			
11			
12			
13			
14			
15			
16			
17			
18			
19			
20			
21			
22			
23			
24			
25			

NOTE

TITLE SEAT CABINET ASSY

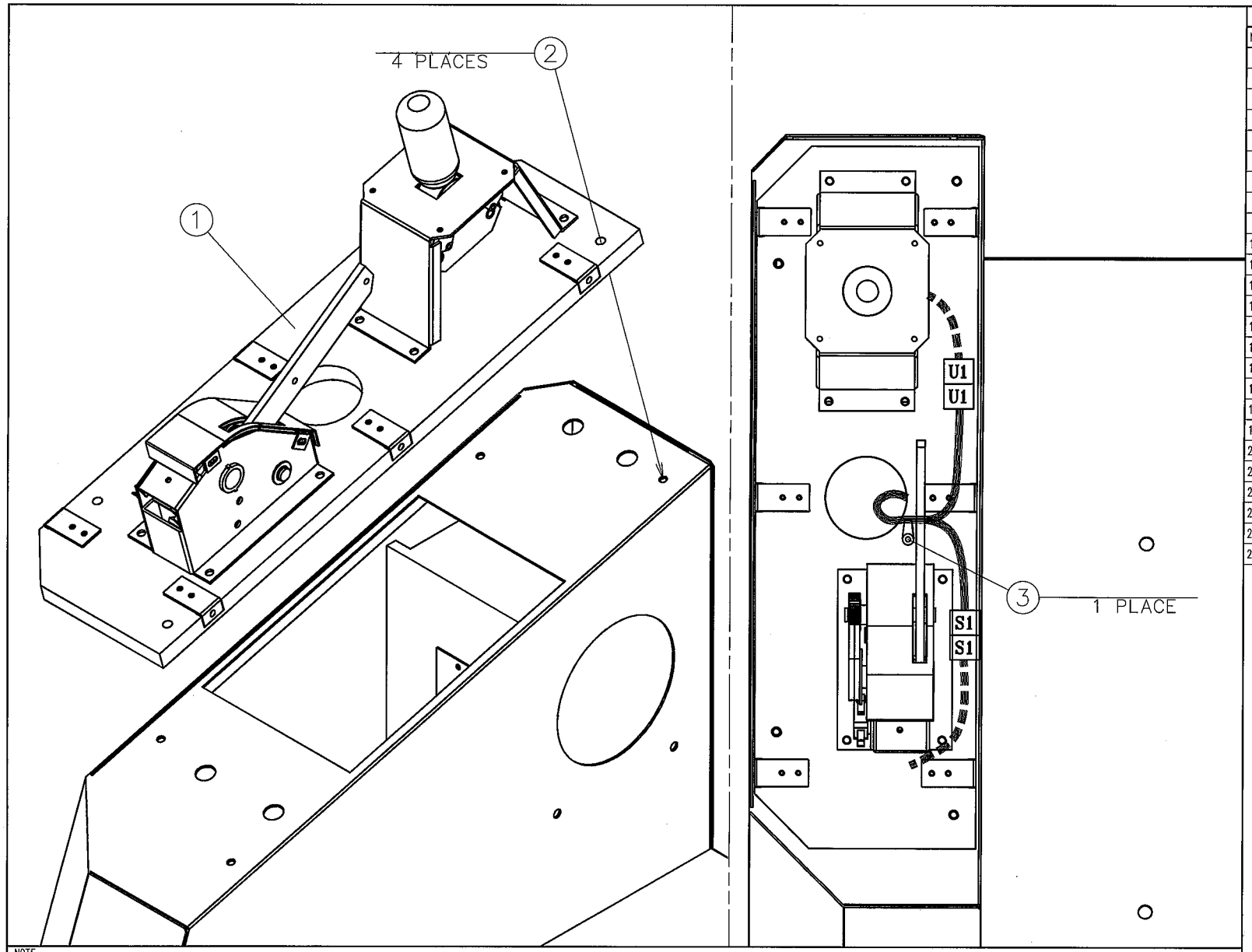

PARTS LIST

No	PARTS No.	PARTS LIST	QTY
1	M9005789A	CONSOLE BOARD ASSY	1
2		PAN HD SEMUTH SCREW-W-<BLACK CHROMATE> M5X25	4
3		BIND HD SELF TAP 3.5X12-1	1
4			
5			
6			
7			
8			
9			
10			
11			
12			
13			
14			
15			
16			
17			
18			
19			
20			
21			
22			
23			
24			
25			

NOTE

TITLE SEAT CABINET ASSY

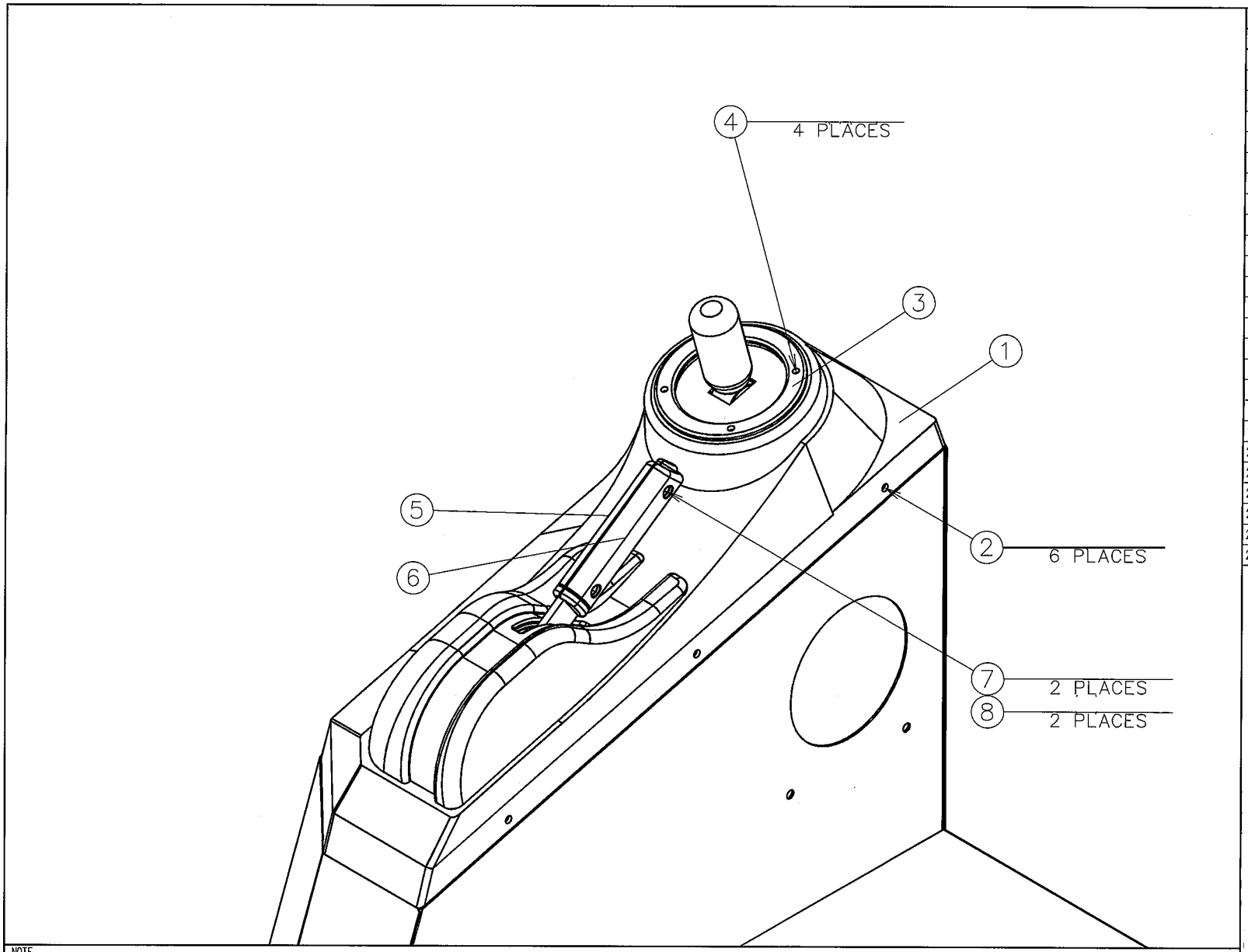

PARTS LIST

No	PARTS No.	PARTS LIST	QTY
1	F9005768A	CONSOLE COVER	1
2		TRUSS HD SCREW-<BLACK CHROMATE> M5X10	6
3	E9100044A	SHIFT RING	1
4		TRUSS HD TAP TIGHT-S-<CHROME> 4X16	4
5	F9005189A	BRAKE GRIP-L	1
6	F9005190A	BRAKE GRIP-R	1
7		SOCKET CAP BOLT M4X16	2
8		HEX CAP NUT-<BLACK CHROMATE> M4-3	2
9			
10			
11			
12			
13			
14			
15			
16			
17			
18			
19			
20			
21			
22			
23			
24			
25			

NOTE

TITLE SEAT CABINET ASSY

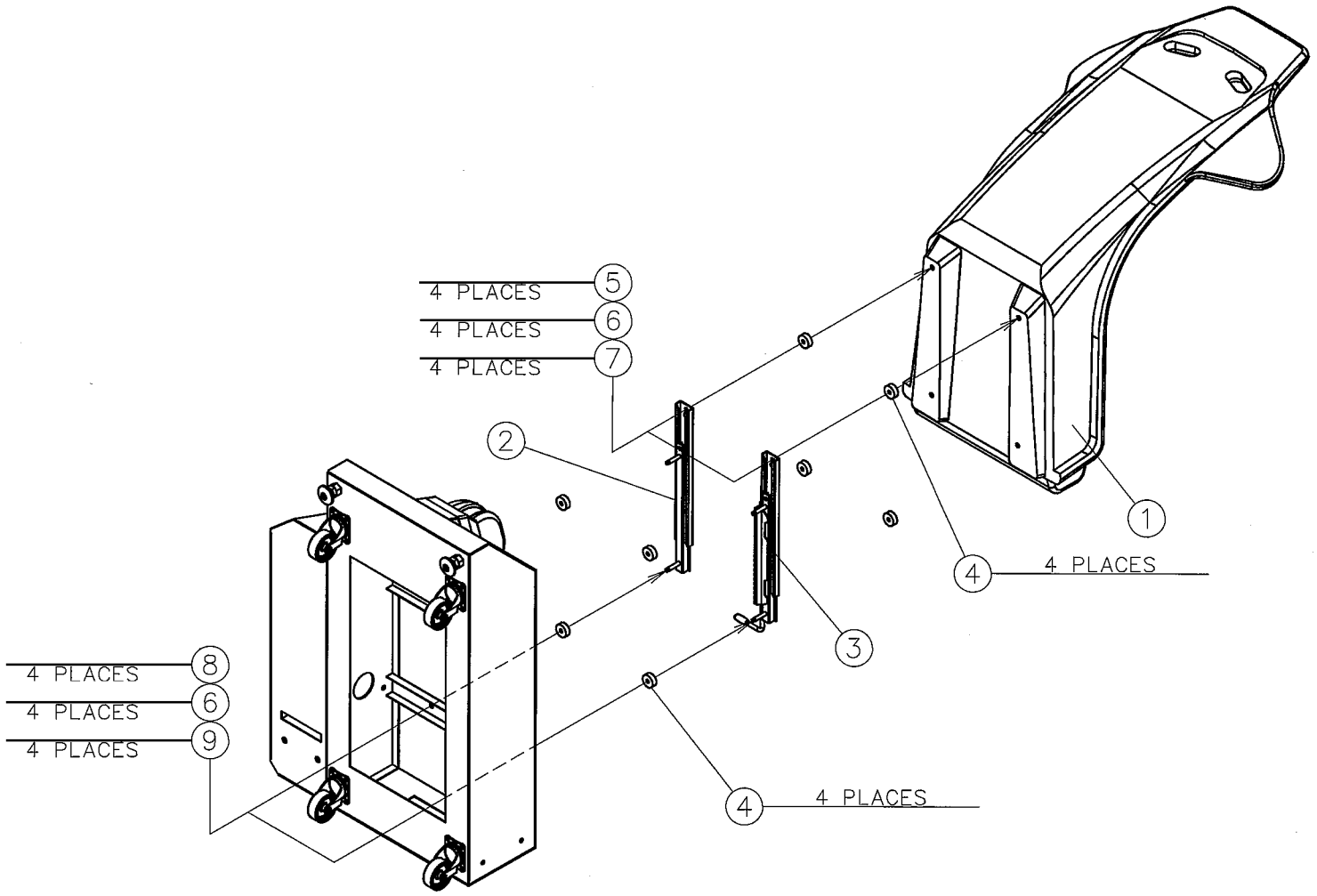

PARTS LIST

No	PARTS No.	PARTS LIST	QTY
1	H9000685A	FRP SEAT	1
2	E5060539A	SEAT RAIL-L	1
3	E5060595A	SEAT RAIL-R	1
4	F9005801A	SEAT SPACER 8.1X30X11	8
5		SOCKET CAP BOLT M8X30(THREE LOCK-9MM)	4
6		SPRING WASHER 8	8
7		PLAIN WASHER 8	4
8		PLAIN WASHER-<BLACK CHROMATE> 9X28X2T	4
9		SELF LOCKING NUT-U-(UNICHRO) M8	4
10			
11			
12			
13			
14			
15			
16			
17			
18			
19			
20			
21			
22			
23			
24			
25			

NOTE

TITLE SEAT CABINET ASSY

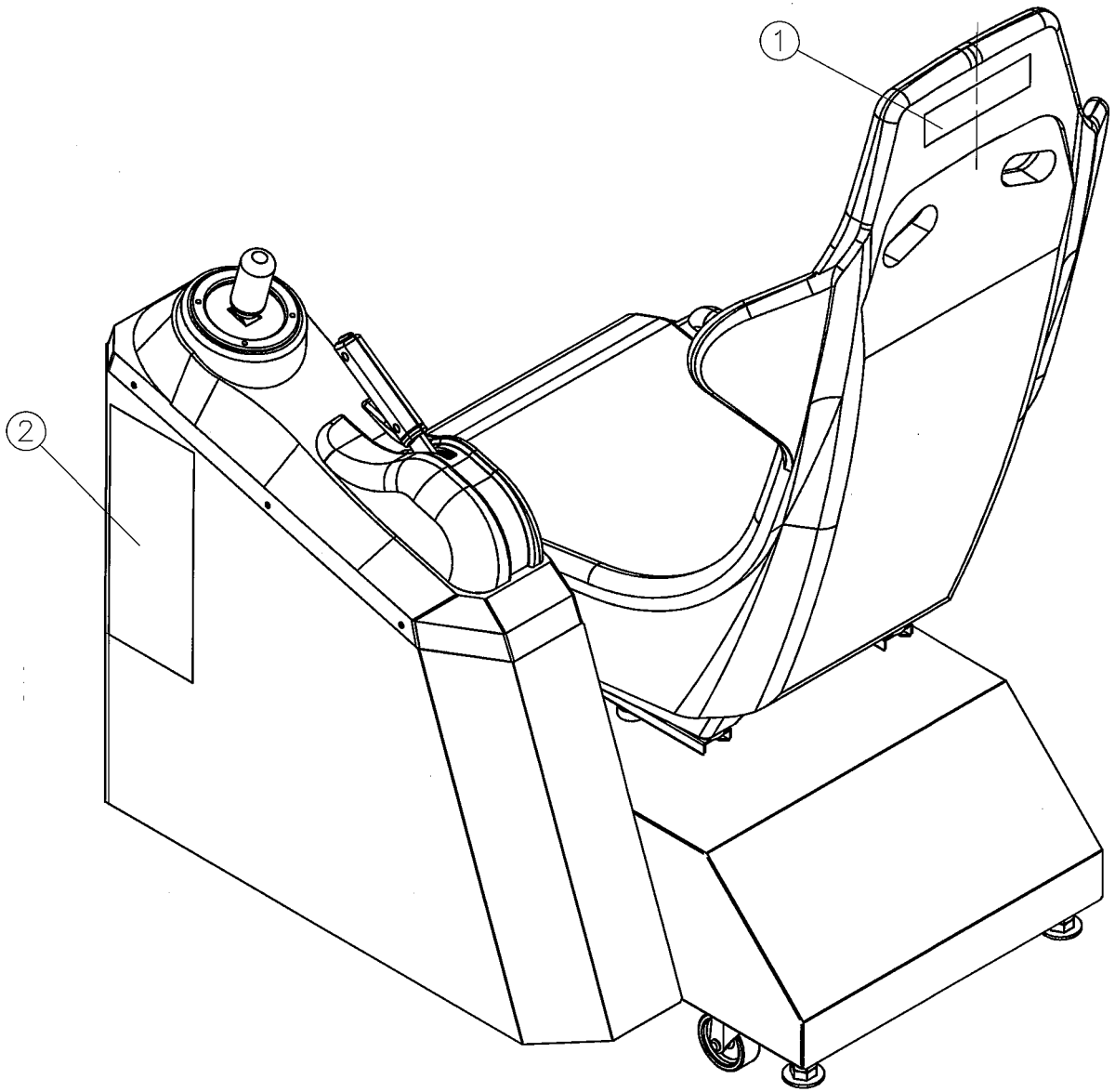

PARTS LIST

No	PARTS No.	PARTS LIST	QTY
1	G1502040A	SEAT STICKER	1
2	G1001871A	CONSOLE STICKER SHEET	0.5
3			
4			
5			
6			
7			
8			
9			
10			
11			
12			
13			
14			
15			
16			
17			
18			
19			
20			
21			
22			
23			
24			
25			

NOTE

TITLE SEAT CABINET ASSY

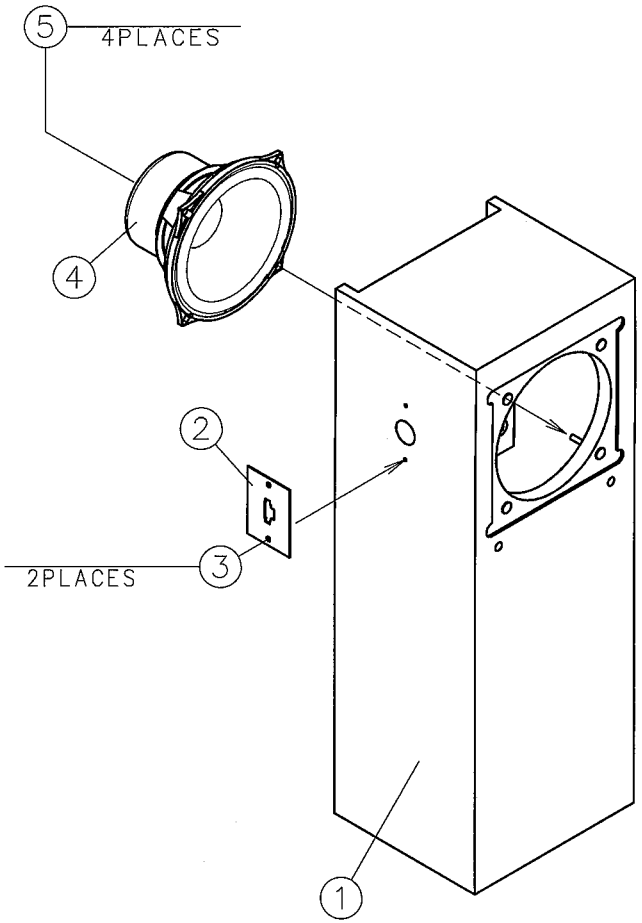

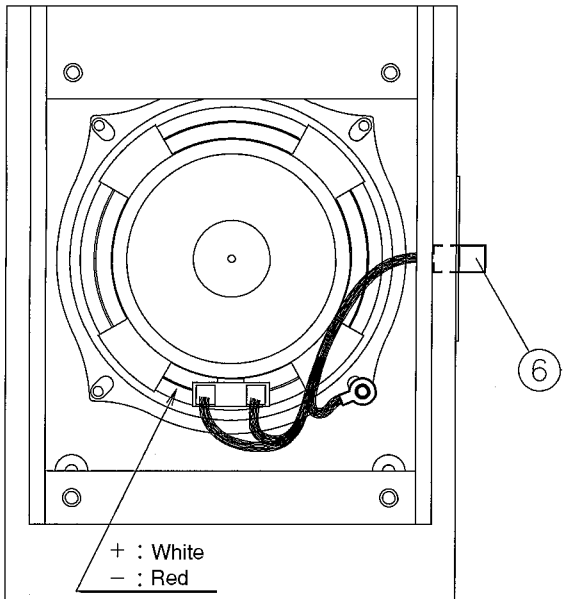

PARTS LIST

No	PARTS No.	PARTS LIST	QTY
1	D2001853A	WOOFER BOX	1
2	E3014291A	CONNECTOR PLATE	1
3		BIND HD SELF TAP-(CHROMATE) 3.5X12-1	2
4	A6000135A	SPEAKER-(4 OHM 30W)-(13CM)-(WOOFER) FL130U48-1	1
5		FLANGE NUT-(CHROMATE) M4	4
6	L9004821A	BASS HARNESS	1
7			
8			
9			
10			
11			
12			
13			
14			
15			
16			
17			
18			
19			
20			
21			
22			
23			
24			
25			

NOTE

TITLE CONSOLE BASE ASSY

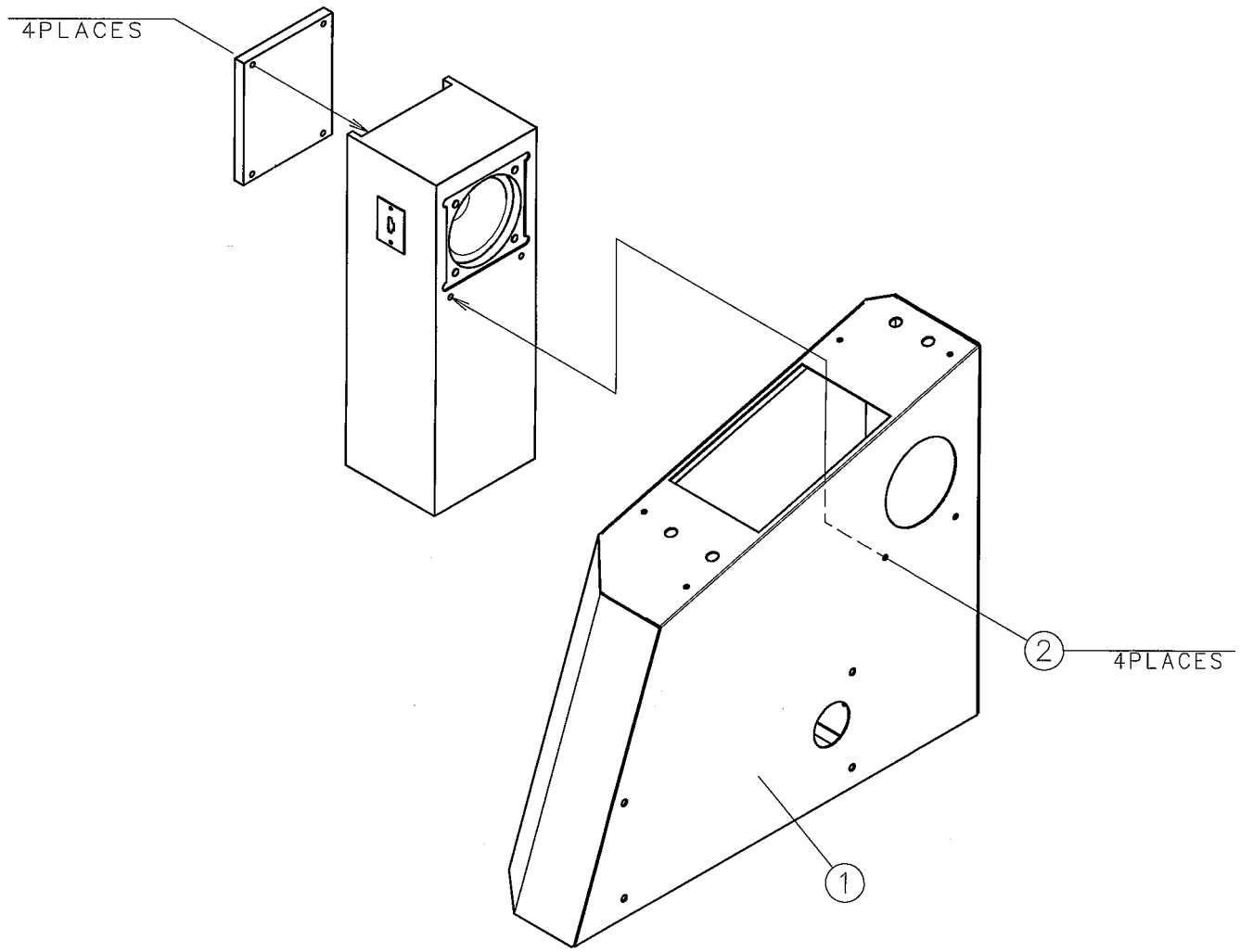

PARTS LIST

No	PARTS No.	PARTS LIST	QTY
1	E3100621A	CONSOLE BASE	1
2		TRUSS HD SCREW-<BLACK CHROMATE> M5X20	4
3			
4			
5			
6			
7			
8			
9			
10			
11			
12			
13			
14			
15			
16			
17			
18			
19			
20			
21			
22			
23			
24			
25			

NOTE

TITLE CONSOLE BASE ASSY

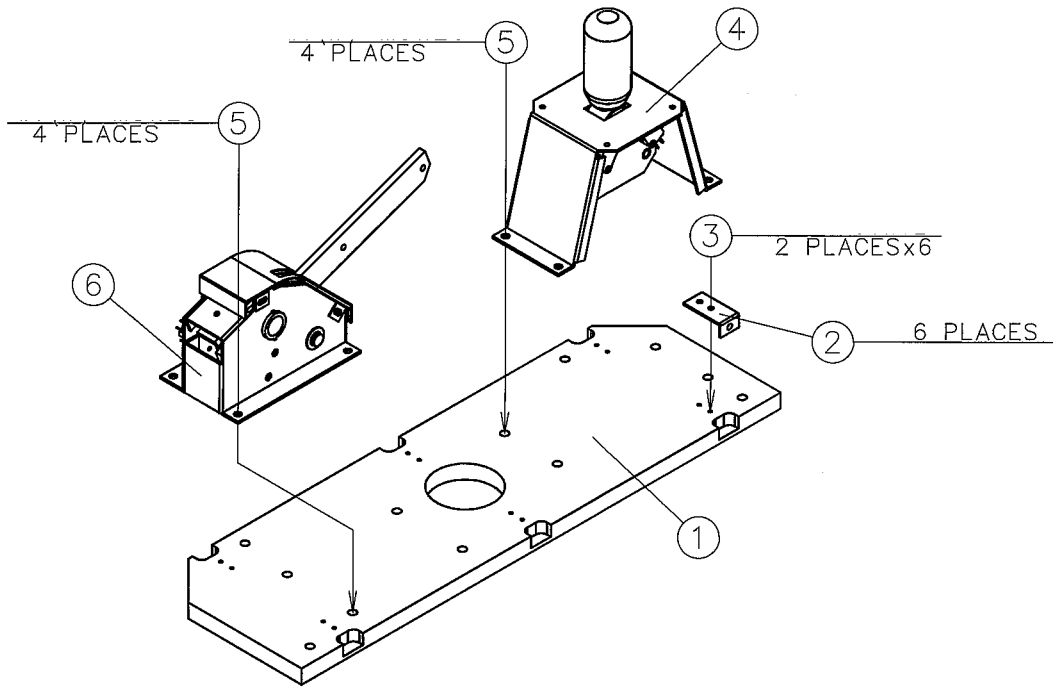

PARTS LIST

No	PARTS No.	PARTS LIST	QTY
1	D2001848A	CONSOLE BOARD	1
2	E3014292A	COVER BRACKET-S	6
3		BIND HD SELF TAP-(CHROMATE) 3.5X12-1	12
4	M0100277A	SHIFT MECHA ASSY	1
5		PAN HD SEMUTH SCREW-W M5X20	8
6	M0100278A	SIDE BRAKE ASSY	1
7			
8			
9			
10			
11			
12			
13			
14			
15			
16			
17			
18			
19			
20			
21			
22			
23			
24			
25			

NOTE

TITLE CONSOLE BOARD ASSY

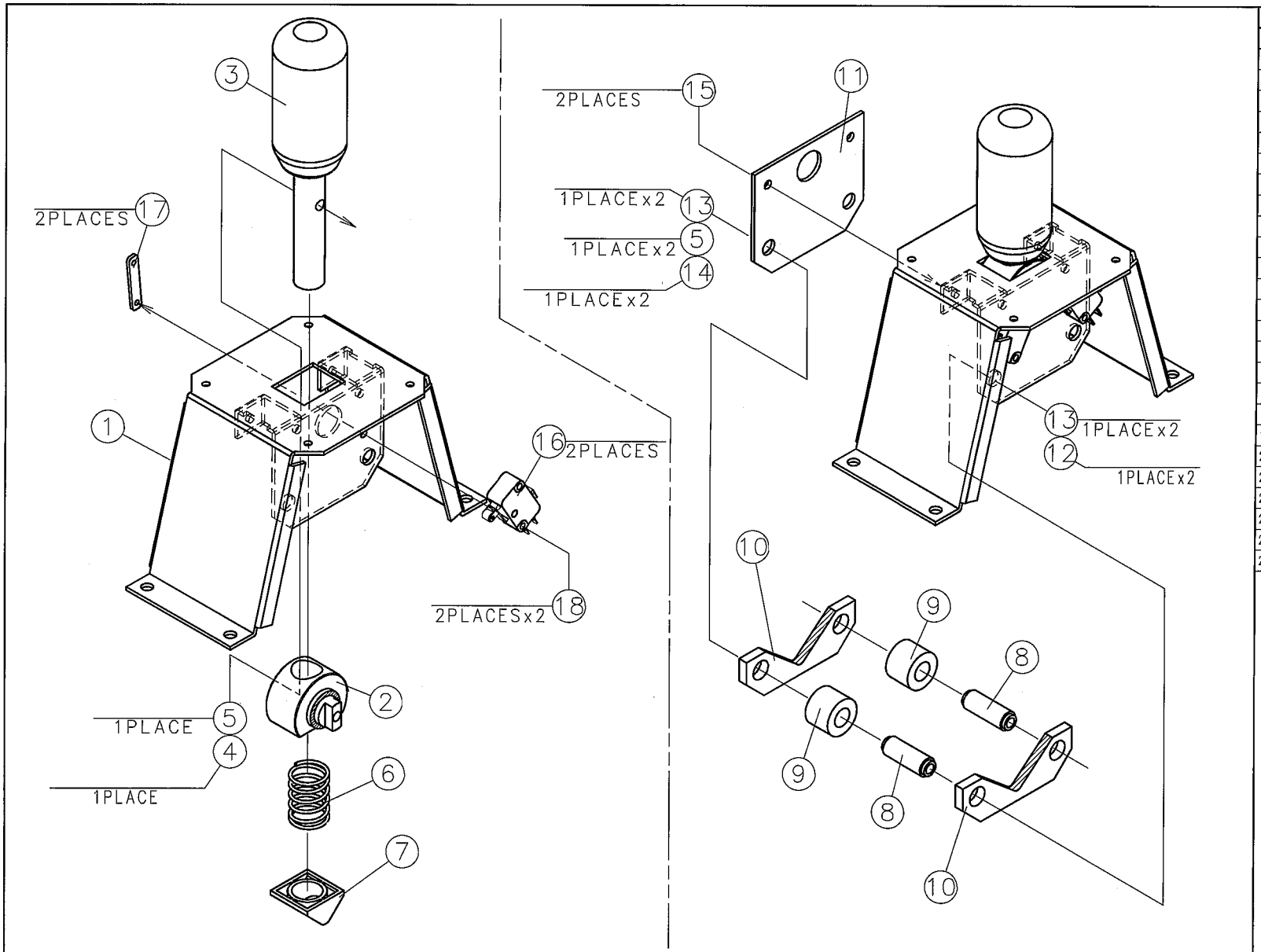

PARTS LIST			
No	PARTS No.	PARTS LIST	QTY
1	E3100627A	SHIFT BRACKET	1
2	E1001516A	SHAFT BASE	1
3	E9100043A	SHIFT KNOB	1
4		SOCKET CAP BOLT M5x30(THREE LOCK)	1
5		SPRING WASHER 5	3
6	E4000538A	SHIFT SPRING	1
7	F9004317A	SPRING GUIDE-S	1
8	E1001518A	STOPPER SHAFT	2
9	F9004322A	SHIFT STOPPER	2
10	F9004323A	SLIDE GUIDE-S	2
11	E3013324A	SHIFT SUPPORT	1
12		SOCKET CAP BOLT M5x40	2
13		PLAIN WASHER 5	4
14		SELF LOCKING NUT-U M5	2
15		WASHER HD TAP TIGHT-S 4x10	2
16	C0200083A	MICRO SWITCH V-105-1VC25	2
17	E3000153A	TAP PLATE	2
18		WASHER HD TAP TIGHT-S 3x16	4
19			
20			
21			
22			
23			
24			
25			

NOTE

TITLE SHIFT MECHA ASSY

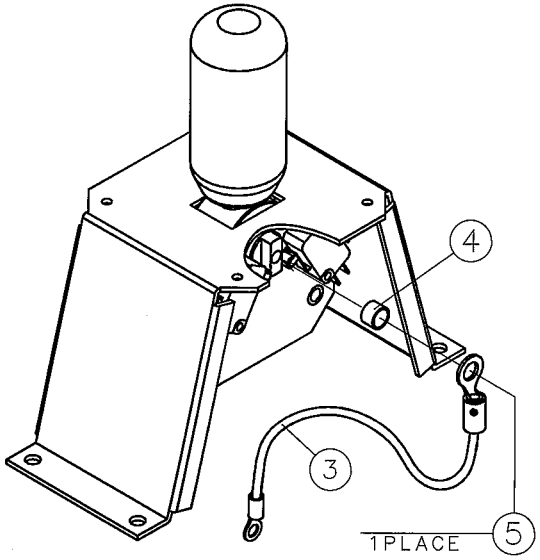

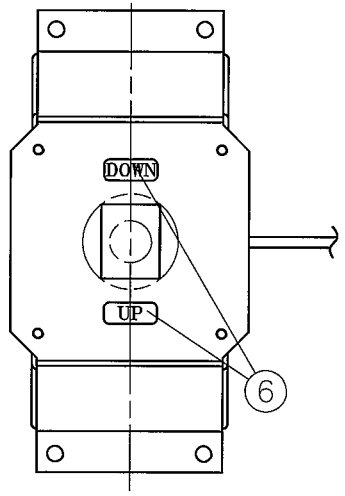

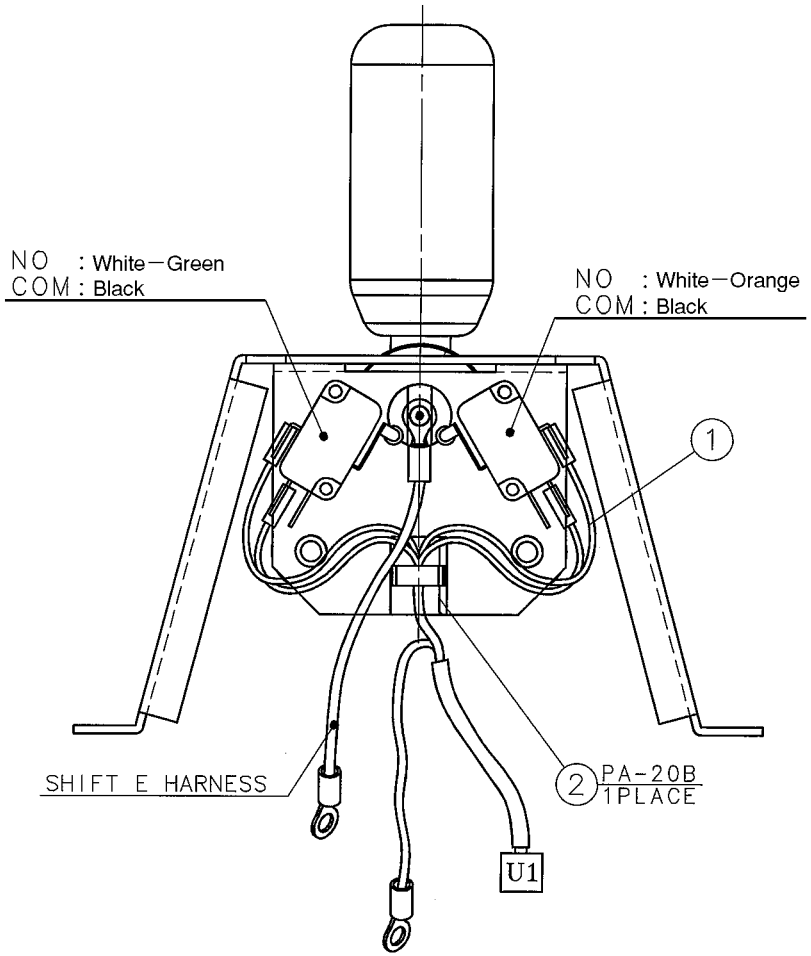

PARTS LIST			
No	PARTS No.	PARTS LIST	QTY
1	L9004831A	SHIFT HARNESS	1
2	F0100064A	PA CRAMP PA-20B	1
3	L9004389A	SHIFT E HARNESS	1
4		SPACER 5x4	1
5		PAN HD SEMUTH SCREW-W M5x12	1
6	G1502041A	SHIFT STICKER SHEET BATTLE GEAR 3	1
7			
8			
9			
10			
11			
12			
13			
14			
15			
16			
17			
18			
19			
20			
21			
22			
23			
24			
25			

NOTE

TITLE SHIFT MECHA ASSY

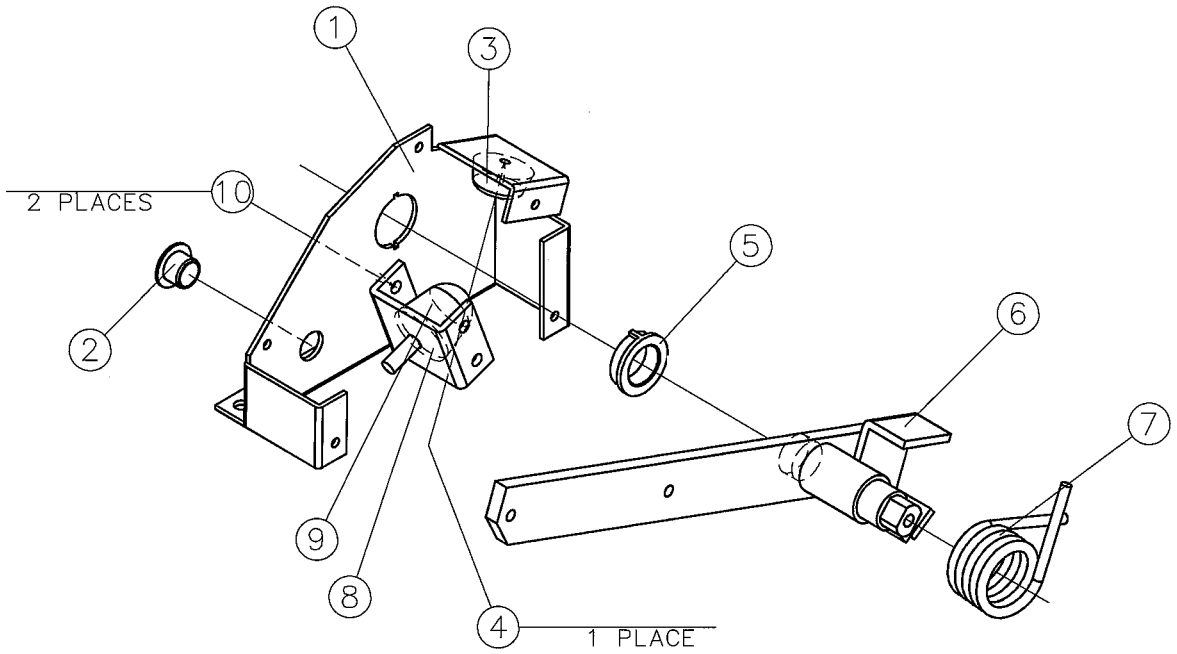

PARTS LIST

No	PARTS No.	PARTS LIST	QTY
1	E3016562A	SIDEBRAKE BRACKET-R	1
2	F9005567A	OILES #80 FLANGE BUSH-(D=10) 80F-1008	1
3	F3000024A	RUBBER LEG K-24	1
4		WASHER HD TAP TIGHT-S 4X10	1
5	F9004230A	CLAW BUSH	1
6	E9001331A	SIDEBRAKE LEVER	1
7	E4000691A	SIDEBRAKE SPRING	1
8	E3016567A	STOPPER BRACKET-SB	1
9	F9003962A	STOPPER RUBBER R1-25-HD	1
10		PAN HD SEMUTH SCREW-W M5X12	2
11			
12			
13			
14			
15			
16			
17			
18			
19			
20			
21			
22			
23			
24			
25			

NOTE

TITLE SIDE BRAKE ASSY

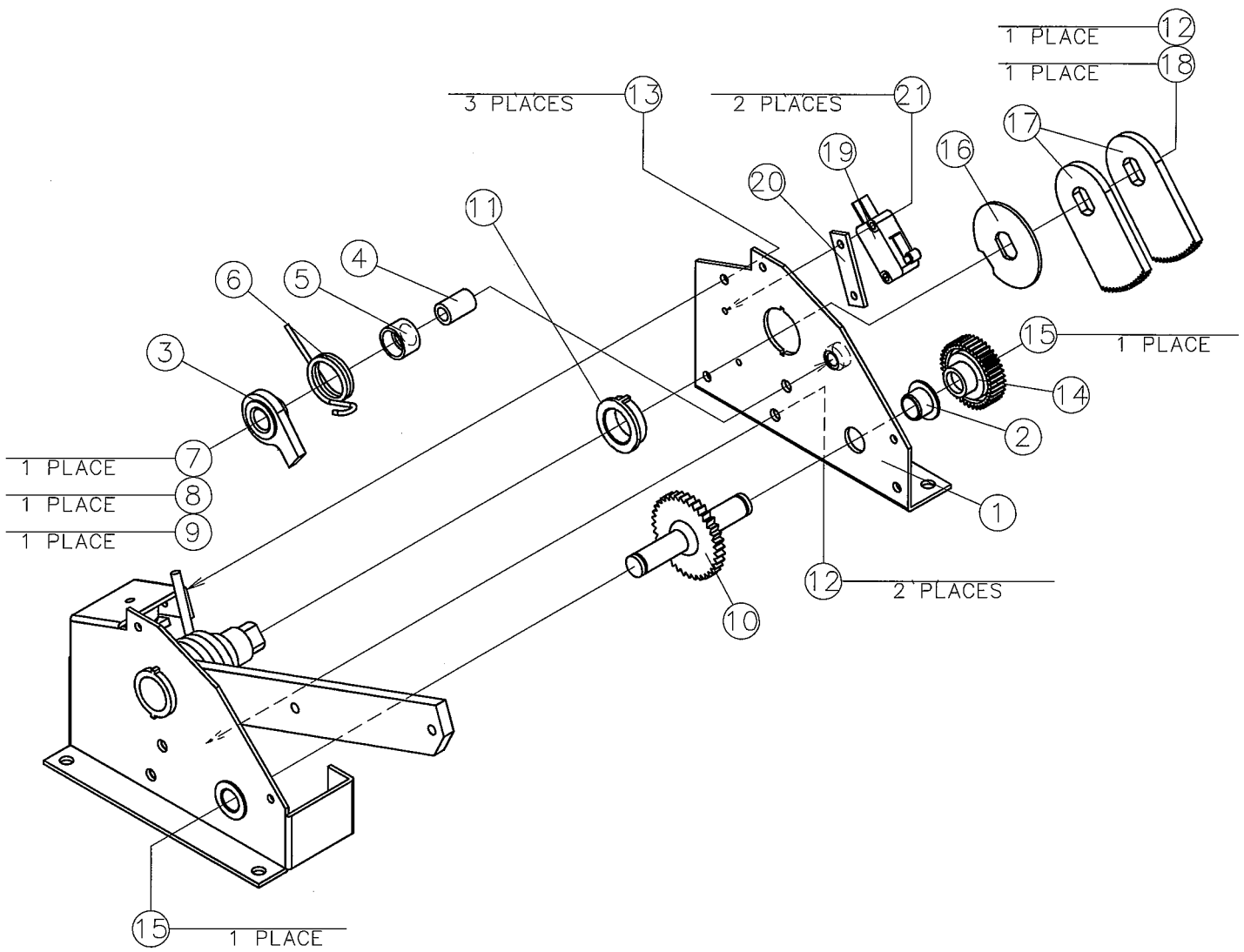

PARTS LIST

No	PARTS No.	PARTS LIST	QTY
1	E3016561A	SIDEBRAKE BRACKET-L	1
2	F9005567A	OILES #80 FLANGE BUSH-(D=10) 80F-1008	1
3	E3015481A	LATCH CLAW WITH BUSH(LFF-1010)	1
4	E1001674A	SPACER 6.2X10X15.6	1
5	F9005203A	SPRING SPACER	1
6	E4000631A	LATCH SPRING	1
7		SOCKET CAP BOLT M6X25	1
8		SPRING WASHER 6	1
9		PLAIN WASHER-(BLACK CHROMATE) 7X22X1.6T	1
10	E9001330A	LATCH WHEEL	1
11	F9004230A	CLAW BUSH	1
12		PAN HD SEMUTH SCREW-W M5X12	3
13		WASHER HD TAP TIGHT-S 4X10	3
14	H9000632A	ONE-WAY CLUTCH TC-G882-1032	1
15		E RING ETWJ-8	2
16	E3016571A	SWITCH PLATE	1
17	E7000132A	GEAR-A	2
18		PLAIN WASHER-(BLACK CHROMATE) 5.5X22X1.6T	1
19	C0200083A	MICRO SWITCH V-105-1C25	1
20	E3016572A	SWITCH SUPPORT	1
21		WASHER HD TAP TIGHT-S 3X16	2
22			
23			
24			
25			

NOTE

TITLE SIDE BRAKE ASSY

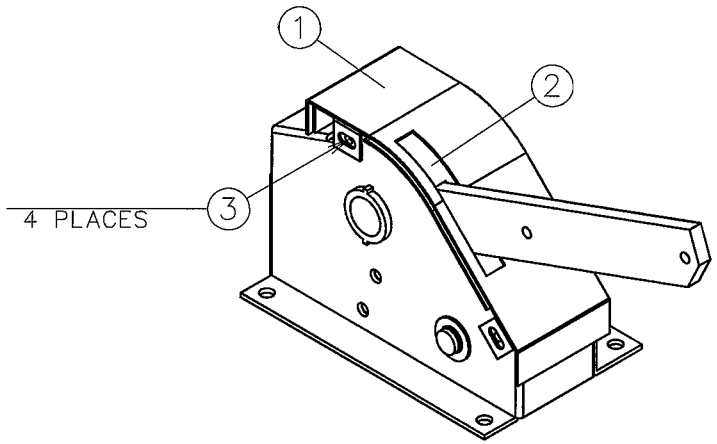

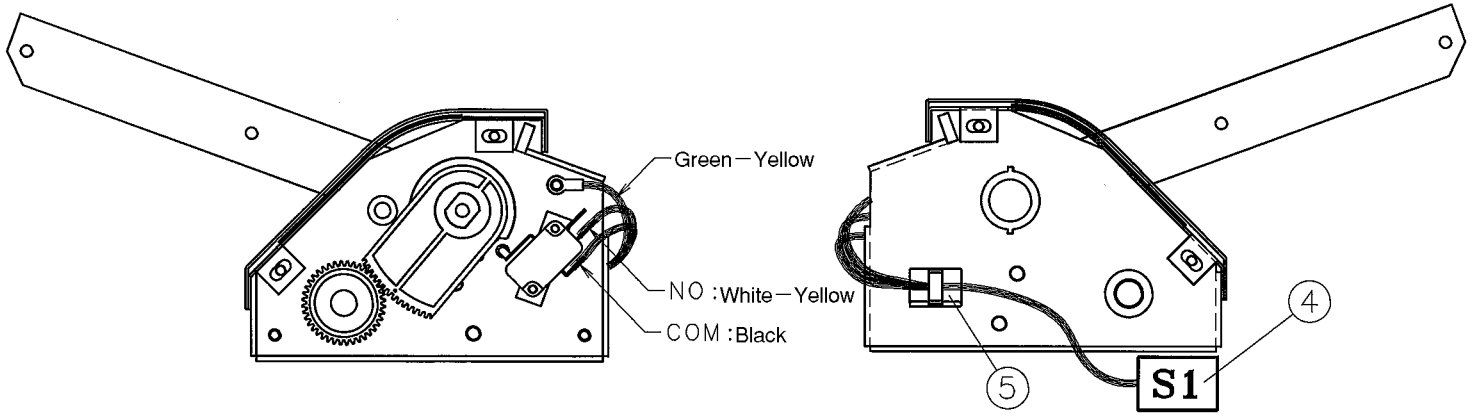

PARTS LIST			
No	PARTS No.	PARTS LIST	QTY
1	E3100623A	MASK BASE-SB	1
2	F9005796A	MASK PLATE-SB	1
3		WASHER HD TAP TIGHT-S 4X10	4
4	L9004832A	SIDE BRAKE HARNESS	1
5	F0100064A	PA CRAMP PA-20B	1
6			
7			
8			
9			
10			
11			
12			
13			
14			
15			
16			
17			
18			
19			
20			
21			
22			
23			
24			
25			

NOTE

TITLE SIDE BRAKE ASSY

WIRING DIAGRAM

© TAITO CORP. 2003 PRINTED IN JAPAN