BC-3500

Bill & Coin Changer
with Fast Pay System

Field Service Manual
and
Parts Catalog

PART NO. 25238801
REV. N

BC-3500

Bill and Coin Changer

Field Service Manual

and

Parts Catalog

ROWE®/AMi®

MADE IN U.S.A.

Rowe International, Inc.
1500 Union SE • Grand Rapids, MI 49507-1884
(616) 243-3633

Printed in USA

WARNING:

This equipment generates, uses, and can radiate radio frequency energy and if not installed and used in accordance with the instructions manual, may cause interference to radio communications. It has been tested and found to comply with the limits for a Class A computing device pursuant to Subpart J of Part 15 of FCC Rules, which are designed to provide reasonable protection against such interference when operated in a commercial environment. Operations of this equipment in a residential area is likely to cause interference. In which case, the user, at his own expense, will be required to take whatever measures may be required to correct the interference.

Preface

This service manual is divided into six sections:

Section 1 System Description — Introduces you to the BC-3500, its features, and its major components, principles of operation, and capacities.

Section 2 Installation and Programming — Guides you through step-by-step installation instructions and detailed setup (programming) procedures.

Section 3 Routine Service — Provides routine service instructions for general maintenance and preventive maintenance. This section provides information for routine service and identified problems. Refer to *Section 4: Troubleshooting* for procedures and techniques to identify a malfunction or reject problem.

Section 4 Troubleshooting — Provides troubleshooting charts, detailed error message descriptions, troubleshooting procedures, a block diagram, schematics, circuit board layouts, and components lists. This section also contains a detailed sequence of operation.

Section 5 Miscellaneous — Contains a harness color code list and other miscellaneous information.

Section 6 The Parts Catalog — Lists and illustrates all replaceable modules in the BC-3500.

This manual is intended for owners, route operators, and technicians. It provides all field and shop related service and maintenance material. Accessories and their installation and service are discussed in the corresponding accessory instructions (or manuals).

Table of Contents

SECTION 1 — SYSTEM DESCRIPTION

Introduction **1-1**

General Operation **1-1**
Changing a Bill 1-1
Changing Coins 1-2

Functional Description **1-2**
Bill Transport 1-2
Dual Bill Stacker 1-3
Coin Acceptor 1-4
Solid-State Coin Switches 1-5
Coin Dispenser 1-5
Coin or Bill Return Button 1-6
Hoppers 1-6
Hopper Capacities 1-7
Machine Capacities (Bill Stacker, Coin Box) 1-7
Temporarily Out of Service Lamp 1-8
Power Control Center 1-8
Dollars Accepted Counter 1-8
EMI Filter 1-9
Power Supply 1-9
Test Switches 1-9
Power Control Relay 1-9
Computer Control Center 1-9
Status Display 1-10
Service and Control Switches 1-10

Denominations Accepted **1-11**

SECTION 2 — INSTALLATION AND PROGRAMMING

Installation **2-1**
Wall Mounting **2-1**
Change Payout Programming **2-3**
Loading the Hoppers **2-5**
Unloading the Hoppers **2-5**
Operational Information **2-6**

Setting Up the BC-3500 ..... **2-7**
Quick Setup for a BC-3500 Dispensing Quarters Only 2-7
Normal Setup 2-8
Key Information 2-8
Turning the Power On 2-8
Switching to the PROGRAMMING Mode 2-9
If No Access Code Has Been Established 2-9
If an Access Code Has Been Established 2-10
To Program a Different Access Code 2-10

Self-Diagnostics **2-15**
Diagnostic Check 2-15
Fault Message Check 2-15
Status Messages 2-15
Non-Shutdown Faults 2-15
Bill Acceptance Messages 2-15

Table of Contents

SECTION 2 — INSTALLATION & PROGRAMMING *(Continued)*

Transport Self-Clear Check **2-15**
Acceptance Check **2-16**

Dispensing Tokens **2-17**
Token Control 2-18

Fast-Feed Shutdown **2-18**
Accessing the Fast-Feed Menu 2-19
Navigating the Fast-Feed Menu 2-19

Anti-Pullback System **2-20**
Accessing the **Anti-Pullback** Menu 2-21
Navigating the **Anti-Pullback** Menu 2-21

Miscellaneous **2-21**

SECTION 3 — ROUTINE SERVICE

Introduction **3-1**
Removing a Jammed Bill from the Bill Acceptor **3-1**
Bill Jamming Check List **3-1**
Filling and Emptying the BC-3500 ..... **3-2**
Filling the Changer **3-2**
Emptying the Changer **3-3**
Coin Inlet Cleaning Procedure **3-3**
Cleaning the Hopper Coin Path **3-4**
Change Bucket Lubrication **3-6**

Test Procedures **3-6**
Checking a Bucket Solenoid 3-6
Transport Motor Speed Check 3-6
Testing BC-3500 Transport Photocells 3-7
VI - Transport Inlet 3-7
VF - Flipper Cell 3-7
VT - Transmissive Cell 3-7
VR - Reflective Cell 3-7
Coin Counting Phototransistor (Detector) Check 3-8

Adjustments **3-9**
Bill and Coin Return Switch Assembly 3-9
Coin Inlet to Top Door Clearance 3-9
Bill Return Switch Adjustment 3-10
Hopper Chain Adjustment 3-10
Adjsuting the Bill Acceptor Rails 3-12
Adjusting the Bill Transport to Stacker Alignment 3-13
Bill Stacker 3-13
Home Switch Adjustment 3-13
Adjusting the Pusher Plate 3-14
Adjusting the Upper Bill Box 3-15
Bill Stop Flipper Check 3-16
Adjusting the Bill Stop Flipper 3-17
Installing a New or Replacement Bill Stacker 3-17
Timing Belt Tension 3-20

Table of Contents

SECTION 4 — TROUBLESHOOTING

Introduction **4-1**
Power Up Diagnostics **4-1**
Sequence Descriptions 4-2

Machine Status **4-2**
Standby Mode 4-2
Accept, Payout, and Replenish Modes 4-3
Reject Mode 4-3
Out of Service Mode 4-3

Index to Error Messages and Troubleshooting Charts **4-4**

Validation Rejects **4-6**
Cell Sequence Rejects 4-6

Bill Parameter Rejects **4-16**
Transport Errors 4-20

Clearing Errors **4-20**
Machine Errors 4-22
Clearing Machine Errors 4-22
Changer Errors (Non-Shutdown) 4-22
Coin Switch Errors 4-26

Bill Changer Errors (Shutdown) **4-29**
Coin Detector Errors While in the Standby Mode 4-29

MC Dispense Mode **4-47**

Detailed Control Computer Board Operation **4-64**
Control Computer 4-64
Reset Circuit 4-64
I/O Ports 4-65
Digital Display Driver 4-65
Output Circuits 4-66
Transport Motor Control 4-66
Hopper Motor Control 4-66
LED Drive 4-66
Out of Service Lamp 4-67
Stacker Drive 4-67
Dollar Counter 4-67
Bucket Drive 4-67
Stacker Solenoid 4-67
Coin Lockout 4-67
Input Circuits 4-67
Power Supply Circuit Board 4-75
Computer Control Board 4-94
Bill Stacker Driver Circuit Board 4-103
Coin Switch Circuit Board 4-105

SECTION 5 — ADDITIONAL INFORMATION

Harness Color Coding **5-1**

Table of Contents

SECTION 6 — PARTS CATALOG

BC-3500 Code Sheet **6-2**

Introduction **6-3**
Catalog Description 6-3
Parts List Description 6-3
Ordering Replacement Parts 6-3

Parts Catalog **6-5**

FREQUENTLY USED FIGURES AND TABLES

Coin
Acceptor Options *(Table 1-1)* 1-4
Dispenser *(Figure 1-5)* 1-5

Computer Control Center (CCC) *(Figure 1-9)* 1-9

Diagrams
Block Schematic Diagram *(Figure 4-1)* 4-69
Coin Switch
Schematic *(Figure 4-7)* 4-104
Circuit Board Layout *(Figure 4-8)* 4-105
Computer Control Board (CCC) *(Figure 4-5)* 4-87
Driver Circuit Board Schematic *(Figure 4-6)* 4-102
Power Supply *(Figure 4-2)* 4-71

Escrow Bucket Capacities *(Table 2-1)* 2-3

Hopper
Chain Adjustment *(Figure 3-9)* 3-11
Value Codes *(Table 2-3)* 2-12

Machine Capabilities *(Table 1-2)* 1-7

Money
Accepted *(Table 2-4)* 2-12
Combinations Which Are Not Allowed *(Table 2-2)* 2-4

Power Control Center *(Figure 1-8)* 1-8

Transport
Check Points *(Figure 3-1)* 3-2
To Stacker Alignment *(Figure 3-10B)* 3-13
View
Bottom *(Figure 1-3)* 1-3
Top *(Figure 1-2)* 1-2

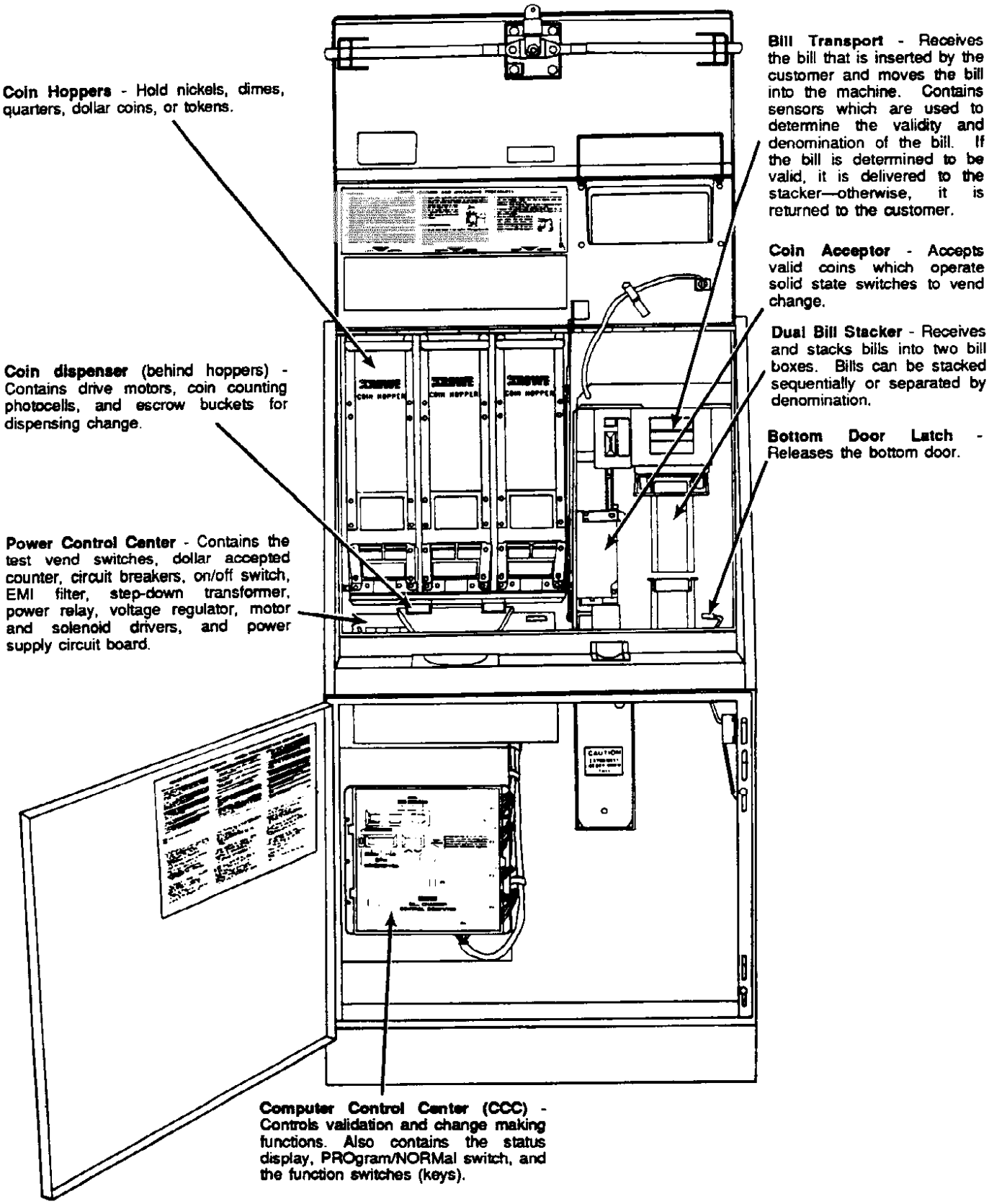

Figure 1-1. BC-3500 Major Components

Section 1: System Description

INTRODUCTION

The Rowe BC-3500 Bill and Coin Changer is our top-of-the-line money changer that uses computer and money changer technology which combines Rowe quality and reliability with maximum flexibility and ease of installation and service.

The BC-3500 accepts and dispenses change for combinations of quarters, half-dollars, and dollar coins as well as 1, 2, 5, 10, and 20 dollar bills of United States currency. Denominations can be programmed to be accepted in many combinations, as can the choice of coins paid out.

- **A high security cabinet provides theft protection.**
- **A microcomputer in the Computer Control Center (CCC) selectively discriminates between denominations, provides protection against bogus bills, and controls the change dispensing functions.**
- Plug-in circuits and assemblies are featured for fast field substitution.
- Coin combinations and acceptable denomination programming is easily changed using the FUNCTION, UP, DOWN, VALUE, and HOPPER buttons on the computer control center.
- Removable coin hoppers permit rapid bulk loading of coins.
- During setup, a special payout check feature ensures that the payout amount selected matches the denomination accepted, unless tokens are being dispensed.

Refer to *Figure 1-1* for the locations of the major BC-3500 components.

GENERAL OPERATION

The entire validation and payout sequence is controlled by a microcomputer to ensure the maximum security against bogus currency and jackpotting. Refer to the *Detailed Computer Board Operation* in *Section 4* for a complete explanation of how the machine works.

Changing a Bill

Inserting a dollar bill in the transport starts a motor which movies the bill along the acceptor track. While in motion, the bill is examined to determine whether or not it is valid. (During this time, the message "VALIDATING" will appear on the computer's display.)

If the bill is valid, a vend signal is transmitted to the dispenser and the bill drops into the bill stacker where it is stacked flat against other valid bills. At this time, the message "PAY $1" (for example) for a $1 bill will appear on the display.

The one dollar change bucket opens, and the dollar's worth of change drops into the coin cup.

The coin hopper motors then operate, loading the correct number of coins from the left, center, and right coin hoppers into the change bucket for the next payout.

If the bill is not valid, the bill transport motor reverses, returning the bill to the customer.

Changing Coins

Quarters, half-dollars, and dollar coins pass through the coin acceptor if the changer is so equipped. Solid-state coin sensors start the payout cycle for these coins.

FUNCTIONAL DESCRIPTION

This functional description can be used to gain an overall understanding of the BC-3500 and its operation.

Bill Transport

The bill transport *(see Figures 1-2 and 1-3)* receives a bill as it is inserted by the customer. The bill is transported through the transporter on a belt system, carefully examined and , if the bill is determined to be valid, is delivered to the bill stacker.

If the bill fails any of the validation tests, the transport reverses and returns the bill to the customer. The bill will hang in the transport inlet for a period of three seconds during which time the control computer will display a message explaining the cause for the rejection. If the bill is not removed during this these three seconds, the computer will display "PURGING ACCEPTOR" and a self-purging routine will begin. If the bill is removed in the three-second period, the cause of the rejection will remain on the display for 30 seconds.

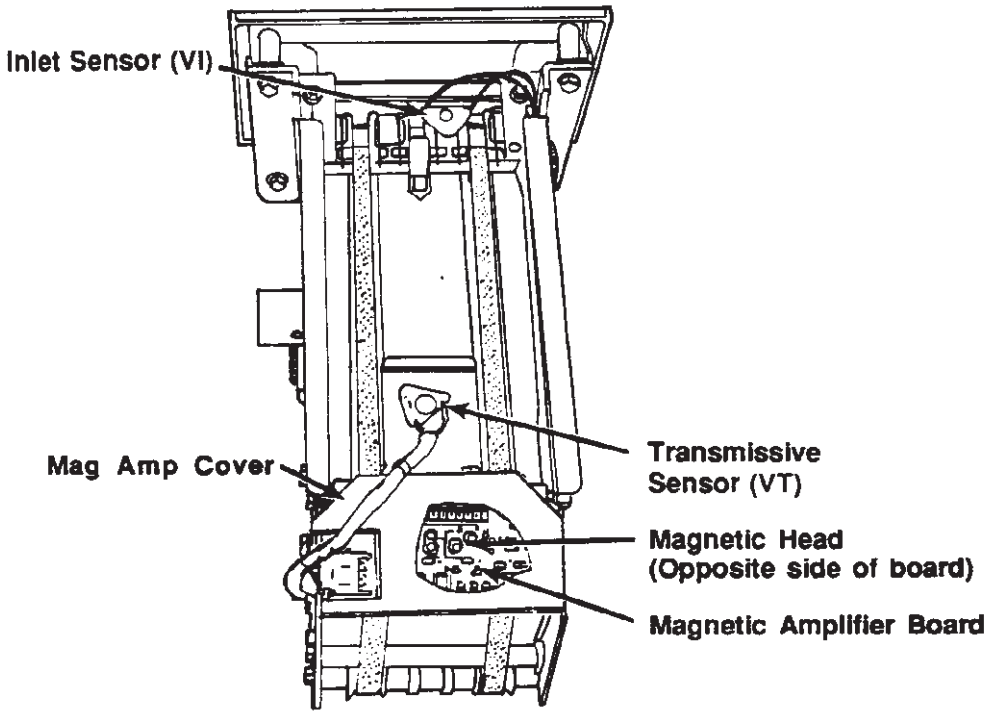

Figure 1-2. Bill Transport (Top View)

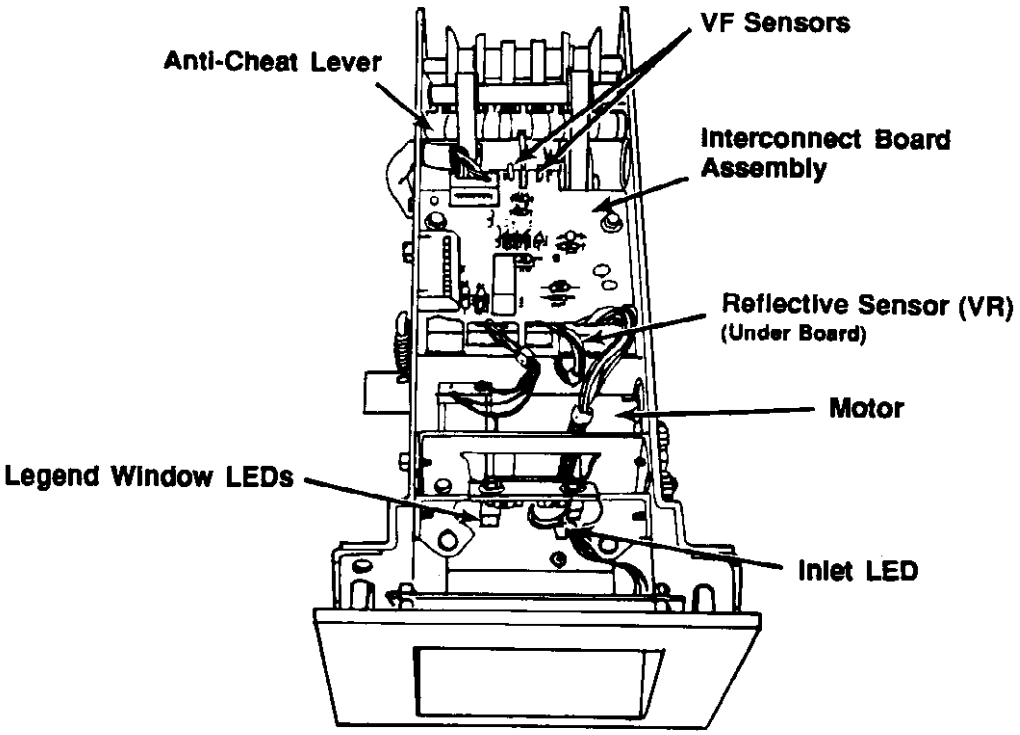

Figure 1-3. Bill Transport (Bottom View)

Dual Bill Stacker

The dual bill stacker in *Figure 1-4* has the capability of stacking bills in two separate bill boxes. This feature allows the bill changer to alternate between the two bill boxes or to separate bills by denomination. This function is controlled by the CCC, which activates a solenoid-driven lever in the stacker. When this lever is in its rest position, it acts as a stop to position the falling bill in line with the upper bill box. When energized, this lever drops out of the way and allows the bill to fall to the lower bill box position. Once the bill is positioned properly, a signal from the CCC activates a triac drive circuit in the stacker. As the stacker leaves home position, a single cam switch closes and performs two functions:

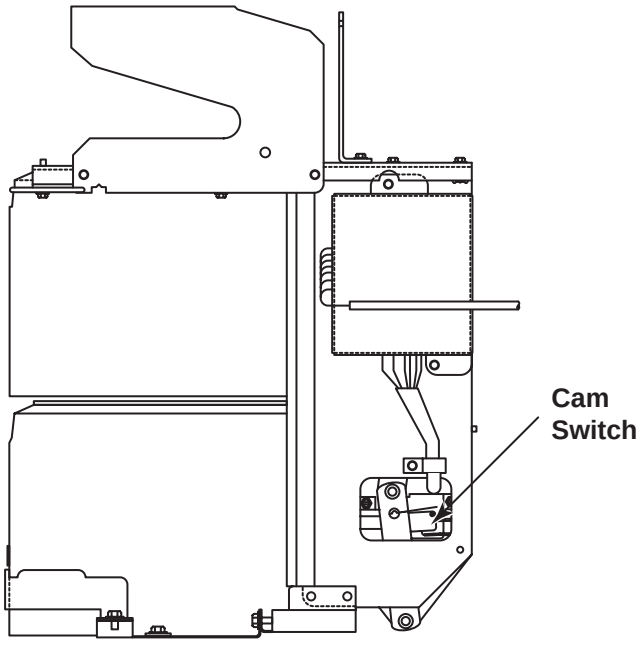

Figure 1-4. Dual Bill Stacker

- It holds the triac drive circuit ON and also activates the stacker monitor line to the CCC.

- When the stacker completes its cycle, the cam switch opens, stopping the stacker motor and deactivating the monitor line to signal the CCC that it is ready for the next cycle.

Coin Acceptor

The coin acceptor checks the coins for which it was designed to determine their validity. Each coin is checked for thickness, diameter, weight, and metallic content. If the coin is deformed or invalid, it is directed through the coin acceptor to the coin return cup. Genuine coins are directed through the coin acceptor and actuate either of the two solid-state coin switches located on the rear bottom of the slug rejector frame.

Jammed coins or slugs are cleared from the coin acceptor by a wiper arm on the coin acceptor, which is actuated by the COIN or BILL RETURN button. The coin inlet and chute deters cheating and jamming. The coin inlet and chute can be opened for easy clean out by removing the lower thumbscrew and rotating the coin track up. Various coin acceptors are available as order options. *Use Table 1-1 that follows as a guide:*

Table 1-1. Coin Acceptor Options

Coin Accepted	Coin Acceptor	Bracket & Harness	Instruction Panel	Coin Block
None	-------	-------	25081202	27027204
25¢ Imonex	Mechanical 40861402	35026111	25081201	27027201 (Down position)
$1 Imonex	Mechanical 40861404	35026111	25061603	27027201 (Up position)
25¢/$1 Imonex	Mechanical 40861405	35026111	25061602	27027201 (Up position)
25¢/$1	Electronic NRI 27064002	35028211, 30984404, and 27065301	25061602 and 25061603	27027201 (Up position)
25¢/$1	Electronic Mars 27063802	35028216 and 30984404	25061602 and 25061603	27027201 (Down position)

NOTE:

Accepting any combination of coins may reduce the number of bill combinations that can be accepted. ***(See Section 2 for details.)***

Solid-State Coin Switches

As a coin passes through a slot in the coin switch assembly with any mechanical coin acceptor, it momentarily interrupts an infrared light beam, causing a solid-state optical detector to send an electric pulse to the CCC. The duration of this pulse is then checked by the computer to determine its validity. Valid coins will initiate the dispense cycle. A separate infrared LED and optical sensor and photo-transistor pair is provided for each of the two possible coin denominations accepted.

Coin Dispenser

The coin dispenser *(see Figure 1-5)* contains the necessary components to handle the coins. The escrow buckets, the solenoid assemblies, the chute from the bucket to the channel mounted on the power control center, and the upper coin chute from the coin detectors to the buckets are located on this assembly.

The three coin detectors, each consisting of an LED and a photo-transistor, detect the coins as they exit from their respective hoppers and fall into the upper coin chute.

The upper coin chute directs the change to the escrow buckets.

The drive for the hoppers consists of three AC motors, which are also on the dispenser. These motors, as well as the solenoids which open the bottom door of the escrow buckets, are controlled by signals from the CCC.

You can access the rear of the dispenser assembly by removing the two screws in the upper corners, grasping the dispenser at the arrow, and tilting the entire assembly forward on its lower pivots.

When you replace the dispenser, be sure that you tighten down the two top screws securely. If these screws are not tightened down, the entire dispenser assembly may tilt forward when the hoppers are unloaded or removed.

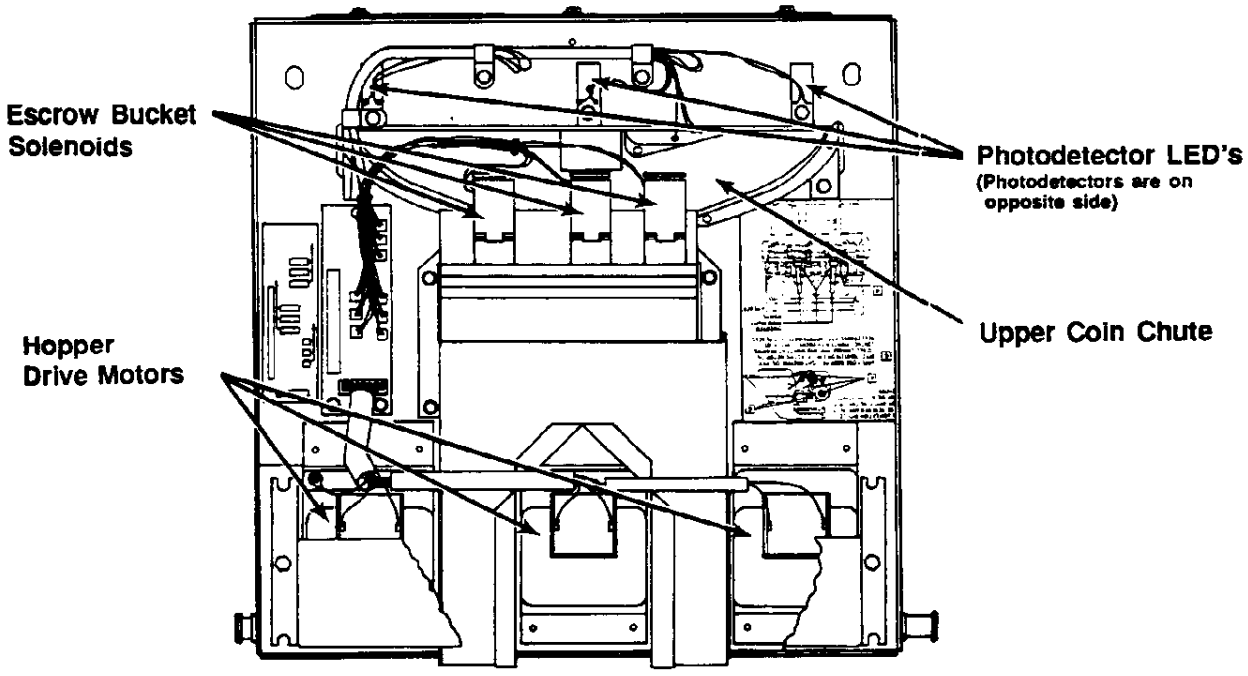

Figure 1-5. Coin Dispenser (Rear View)

Coin or Bill Return Button

When the COIN or BILL RETURN button *(see Figure 1-6)* is depressed, a switch closes and sends a signal to the CCC. The coin lockout coil in the coin acceptor is released and the transport motor rotates in the reverse direction. If the bill reject button is pressed (ON) for more than 10 seconds, the transport will turn OFF automatically to prevent excess wear and overheating and the message "CK BILL RETRN SW" will be displayed and the switch will be ignored until the FUNCTION button is pressed.

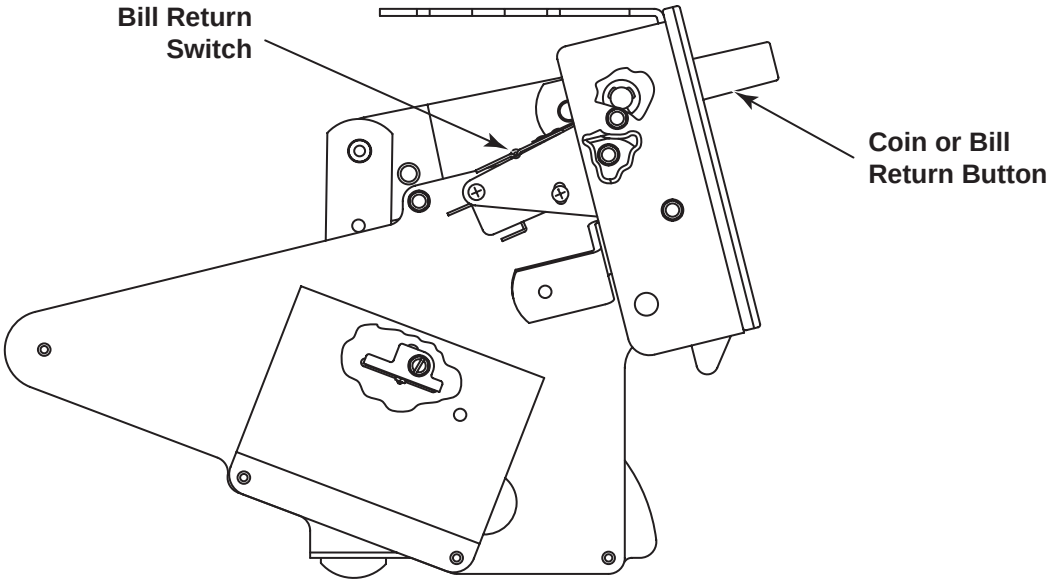

Figure 1-6. Bill Return Switch

Hoppers

The bill changer contains three coin hoppers *(see Figure 1-7)* which mount on the front surface of the dispenser assembly and pivot forward from the bottom for loading, unloading, and removal *(see Table 1-2 for required hopper types and capacities)*.

The hopper transports coins to the detectors and coin chutes by means of a chain conveyor, which is driven from below by a sprocket. The chain follows a serpentine path, so that excess coins fall back into the hopper ensuring only one coin per pin enters the coin counting area.

The chain picks up coins from the bottom of the hopper and carries them up to the top, where they fall through the upper chain guide ring and interrupt a light beam to a photodetector, which is mounted on the dispenser. The required number of coins for a desired change combination are counted in this manner as the coins then fall through a closed chute to the escrow bucket.

An agitator, which is mounted on the drive shaft of each hopper, agitates the coin load to minimize coin jams in the hopper and ensure efficient coin pick up.

To reduce jams and minimize the need for cleaning, the hoppers in the BC-3500 also have Teflon-coated coin tracks.

NOTE:

The hoppers do not have an "Empty Sensor". Empty hoppers are indicated by a failure to count the required number of coins in a specified period of time (approximately three minutes), however, if the changer shuts down frequently with an error relating to empty hoppers when they are not, then the "serpentine coin path" should be cleaned as shown in *Section 3*.

HOPPER CAPACITIES

Hopper	Popular Coin Capacities
65027608 (High-Capacity) Small Coin .705 to .955 inch diameter	Dimes - 8,000 Nickels - 4,000 Quarters - 3,400
65027609 (High-Capacity) Large Coin/Token .937 to 1.125 inch diameter	Quarters - 3,200 Dollars - 2,200 .984 inch Tokens - 3,000

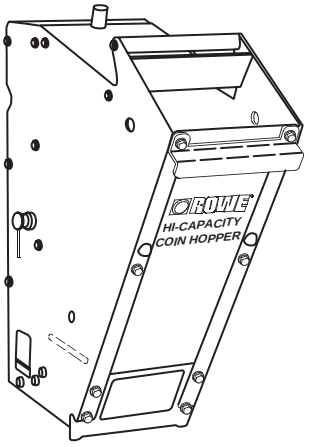

Figure 1-7. High-Capacity Coin Hopper

MACHINE CAPACITIES

Bill Stacker

Separate Mode - 1000 bills in the upper bill box plus 1000 bills in the lower bill box - however, since it is unlikely that the machine will take in the same number of bills in both bill boxes, the capacity may be limited to something less (the stacker is filled when either bill box reaches 1000 bills).

Alternate Mode - 1000 bills in the upper bill box plus 1000 bills in the lower. Bills are not separated, in order to fill both boxes to maximum capacity.

Coin Box 3500 Quarters

NOTE: For escrow bucket capacities, see *Table 2-1*.

Temporarily Out of Service Lamp

This lamp is located on the top door above the bill and coin inlet area. It lights whenever the machine is empty of change or shutdown due to some malfunction. In addition, the 40 VDC LED will normally go out if the out of service lamp is lit. Press the FUNCTION button on the CCC to turn the OUT OF SERVICE light off after the machine has been reloaded or if the malfunction has been repaired.

The temporarily OUT OF SERVICE **lamp also lights during all transport errors. These errors include recoverable errors. The** OUT OF SERVICE **lamp will turn** OFF **if a recoverable error condition clears by itself.**

The changer will shut down for reasons other than being empty; specifically if a fault or malfunction of the machine occurs. When the changer shuts down, a message will appear on the display located on the computer board. This message will greatly aid the service person in quickly determining the malfunction or faulty part ***(see Section 4: Troubleshooting).***

Power Control Center

All power supply components and associated circuitry are located in this single subassembly for easy diagnosis and repair. The power control center (see Figure 1-8) is located below the dispenser assembly and contains the dollars accepted counter, TEST VEND switches, EMI filter, power transformer, power supply circuit board, circuit breakers, and ON/OFF switch.

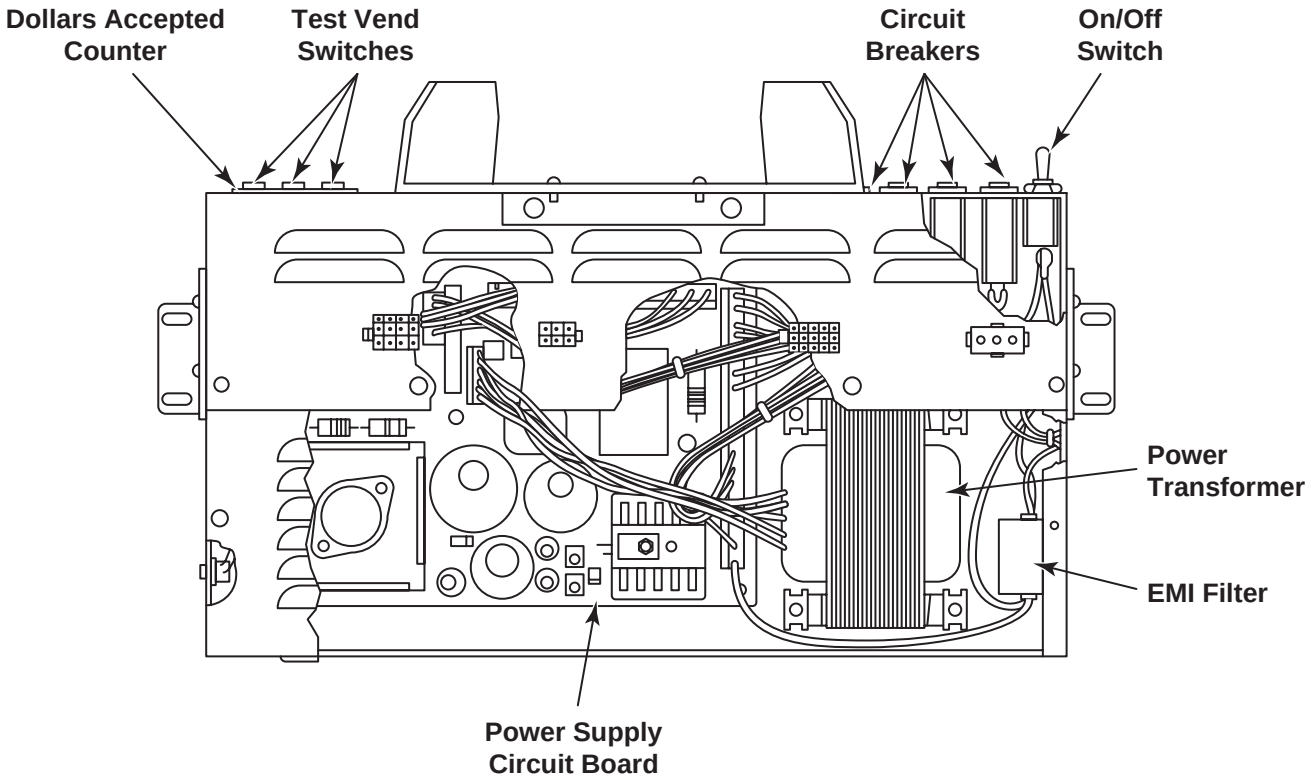

Figure 1-8. Power Control Center

DOLLARS ACCEPTED COUNTER

The dollars accepted counter registers the number of dollars accepted by the machine. The counter increments once for each dollar. (For example: A $5 bill will make the counter increment five times.) This counter is not resettable.

EMI FILTER

The ElectroMagnetic Interface (EMI) filter removes undesirable electrical noise from the incoming power line. The power transformer supplies 36 VAC and 22 VAC from which the rest of the system voltages are derived.

POWER SUPPLY

The ON/OFF switch controls power to the machine.

A 7-amp circuit breaker is in the power line to the bill changer. The power transformer is protected by a 2-amp circuit breaker in the primary winding. A 7-amp and a 5-amp circuit breaker protect the secondary windings.

The power supply circuit board rectifies and filters the 36 VAC and 22 VAC to provide 40 VDC, 30 VDC (current limited), 12 VDC, 8 VDC, and 5 VDC to the rest of the system. It contains indicator LED's for the 40 VDC, 30 VDC, 12 VDC, and 5 VDC supplies. Note that the 12 VDC actually runs at about 14.6 V – this is normal.

TEST SWITCHES

The three TEST switches are used to manually initiate a change dispense cycle for each of the machine's escrow buckets. The computer will not recognize a TEST switch closure if the machine is in the process of validating a bill, dispensing change, or in SHUTDOWN. Pushing a TEST switch will also cause the stacker to cycle.

POWER CONTROL RELAY

The power control relay switches the 40 VDC, 30 VDC, and 120 VAC supplies to the machine and 5 VDC to the OUT OF SERVICE lamp. This relay is controlled by the CCC and is energized under normal operating conditions. Under OUT OF SERVICE conditions, the CCC de-energizes the relay to disconnect the previously mentioned voltages from the rest of the system and shut down the machine. In this condition, the +40 VDC LED on the power supply board will be OFF, while the other three remain ON.

Computer Control Center

The computer control center (referred to as the "CCC" and *shown in Figure 1-9*) directs all of the operations of the bill changer including both validation and change dispensing functions. It contains a microcomputer which controls all of the major functions of the bill changer. It also contains the following controls and displays:

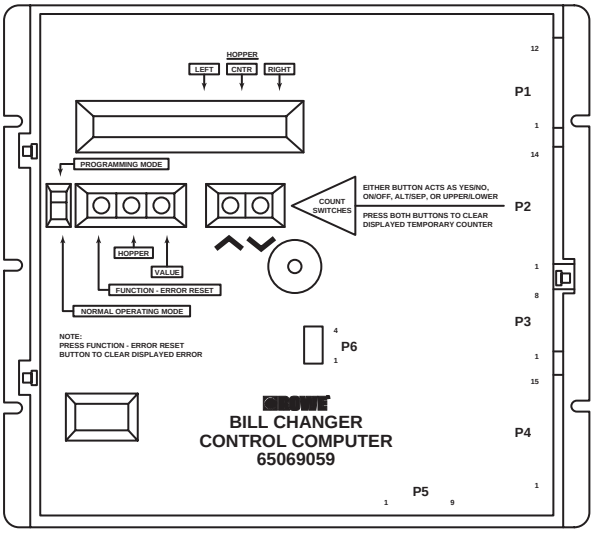

Figure 1-9. Computer Control Center

STATUS DISPLAY

The CCC contains many programming and self-diagnostic features which are described in the paragraphs that follow. All messages are shown on a 16-character vacuum fluorescent display. In some cases, the message is short enough so that the word(s) can be spelled out: in other cases **the word(s) are abbreviated. The abbreviations are clear and logical and each message is described in *Section 4* of this manual.**

SERVICE AND CONTROL SWITCHES

The BC-3500 Bill Changer's service features and programming options are controlled by six switches. The descriptions that follow are introductory; *follow the detailed procedures and instructions in Section 2* for specific operating and programming information.

Programming/Normal

Select either the NORMAL operating mode or the PROGRAMMING mode.

NORMAL POSITION

In the NORMAL mode position, the changer operates in a normal manner. The CCC monitors all systems for faults or customer input.

The VALUE and HOPPER buttons provide unique features while the machine is in the NORMAL mode.

Value Button

Pressing the VALUE button will cause the display to show the total dollar amount accepted since the temporary audit value was cleared. Thus, if you clear this audit counter *(see Section 2)* each time you load the hoppers, you can quickly see how much change has been paid out and thus determine whether or not the bill changer needs to be loaded again.

Hopper Button

Pressing the HOPPER button will cause the display to show the last three denominations accepted. The most recent denomination is displayed on the left side, the bill before that is displayed on the right side. If a test vend in included in this list, the display will show: "TVL", "TVC", or "TVR" **(depending on which** TEST VEND **switch was pressed) in its proper position on the display. If a coin was accepted, the display will show "**25**", "**50**", or "**$1C**" on the display in its proper sequential position (left, center, or right position).**

When the PROGRAMMING/NORMAL switch is moved from PROGRAMMING to the NORMAL position, the message "STORING NEW DATA" will be displayed.

PROGRAMMING POSITION

Setting the PROGRAMMING/NORMAL switch to the PROGRAMMING **position allows you to inspect and/or change the audit and setup information. This information is displayed on the status display and is selected and changed by using the five pushbuttons that are described in the following paragraphs *(see Section 2: Changing Payout Programming Also)*:**

Function Button

Advances from the current set of options to the next set. The following list shows the sequence of options that will be displayed as the FUNCTION button is pressed repeatedly:

1. TEMP COUNTERS
2. PERM COUNTERS
3. PROGRAMMING
4. MC PAYOUT
5. HOP VAL
6. ACCEPT
7. PAYOUT
8. STACKER MODE ALT/SEP
9. BILL B CHECK
10. BILL TEST

If the FUNCTION button is pressed while BILL TEST is showing, the "TEMP COUNTERS" display will reappear.

Hopper Button

In the PROGRAMMING mode, this button advances the display to the next hopper if the display includes hopper information.

Value Button

During the PROGRAMMING mode, this button is used to move between various values: i.e., the value of coins in the hoppers, denominations to be accepted, etc.

Up ∧ and ∨ Down Buttons

Increment or decrement the displayed option value. Options that have only two possibilities, such as ON and OFF, are toggled between the two options using either of these buttons.

DENOMINATIONS ACCEPTED

The BC-3500 can accept quarters, half-dollars, and dollar coins as well as 1, 2, 5, 10, and 20 dollar bills of United States currency. All of these denominations can be selected in combination with other denominations. However, due to mechanical limitations and other considerations, some combinations cannot be used. *(See the Accept Function in Section 2 for further detail.)*

This page intentionally left blank.

Section 2: Installation & Programming

INSTALLATION

Installing the BC-3500 Bill and Coin Changer requires some instruction. For all types of installation, be sure that a power source is convenient and that the changer is mounted level. ***Always use a grounded (3-prong) outlet.***

NOTE:

For both security and safety reasons, Rowe strongly recommends that this bill changer be securely anchored to the floor and/or wall. Please check the instructions that follow:

WALL MOUNTING

The following illustrations and procedures should be used for wall mounting. For concrete or masonry wall mounting, use lag screws and lead anchors. For wood frame wall mounting, use lag screws attached directly into the wall studs. If the wall is not flat, you may need to add spacer washers between the wall and the mounting plate.

If the changer is rigidly mounted to the wall, make the power input connection through rigid conduit into the changer to meet U.L. requirements *(see Figure 2-1)*.

For convenience, the back of the upper cabinet is dimpled in four places. You may choose to use these for the placement of mounting bolts; if so, drill a 7/16- to 1/2-inch hole in each of these locations to accommodate a 3/8-inch bolt *(see Figure 2-2)*. Be careful not to drill into any internal BC-3500 components.

NOTE:

Be sure to remove all metal filings before putting the changer into service.

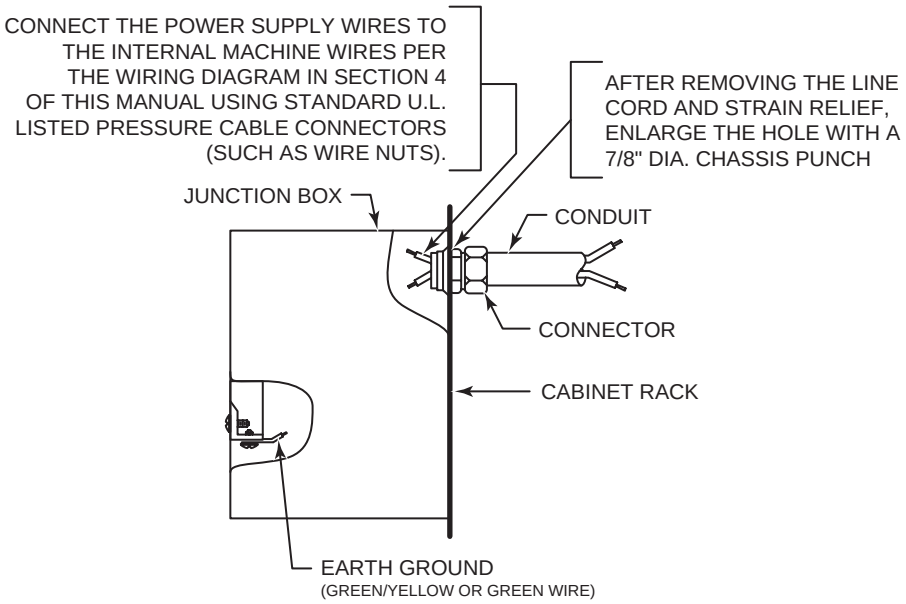

Figure 2-1. Installing a 1/2-Inch Conduit

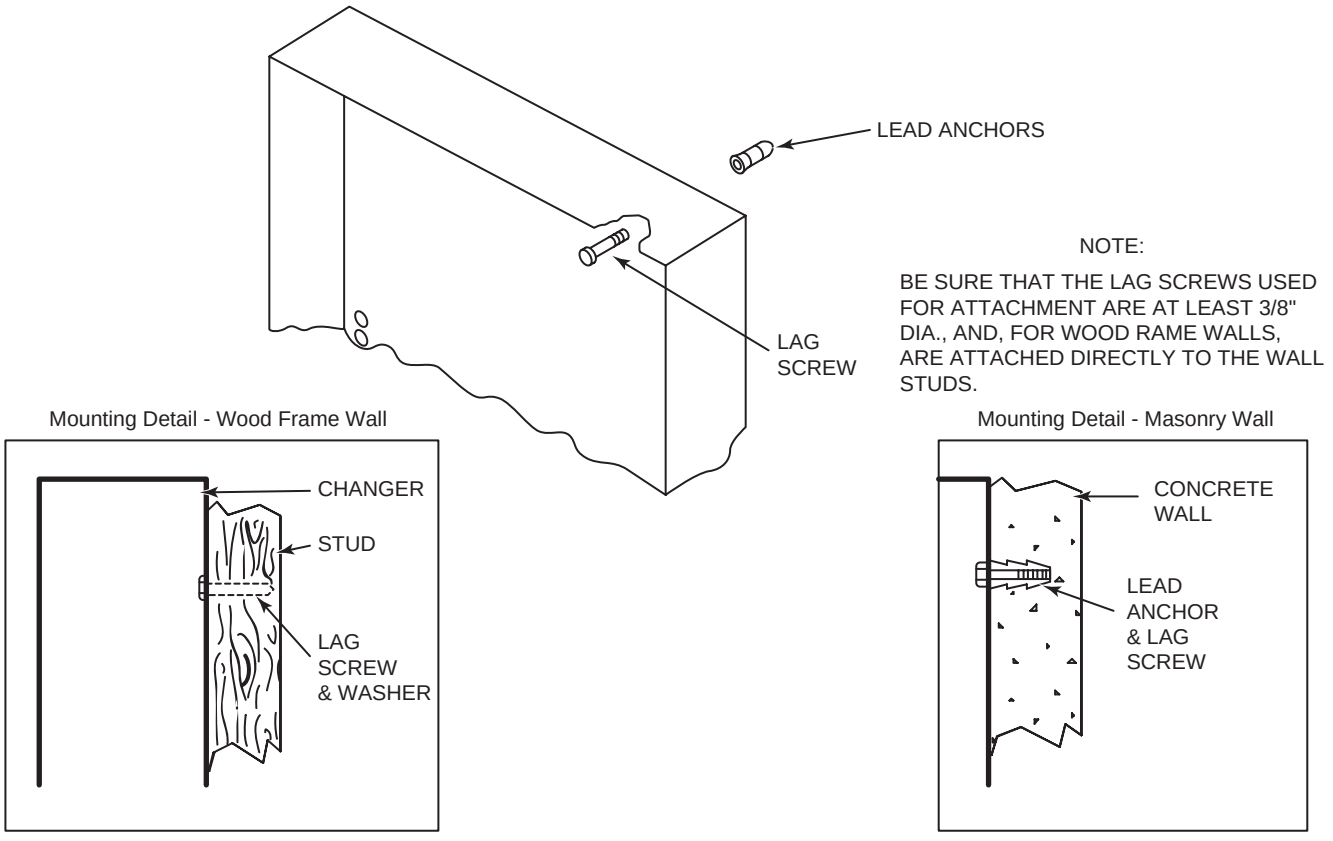

Figure 2-2. Attaching the BC-3500 to a Wall

CHANGE PAYOUT PROGRAMMING

Many different change combinations can be dispensed for the various denominations of money accepted. Change payout programming is accomplished using the five buttons on the CCC. As mentioned earlier, there are mechanical limitations which must be considered. The BC-3500 has three escrow buckets which will be preloaded with three different payout values.

The CCC will automatically assign the highest payout to the right escrow bucket, the next highest denomination to the left escrow bucket, and the smallest denomination to the center bucket. Even though the computer reassigns the escrow bucket values automatically, you must be aware of and obey the capacity limitations of each of the escrow buckets in order to maintain reliable operation. *Table 2-1* shows the capacities of the three escrow buckets. You must limit your payout combinations such that the total volume of coins in any escrow bucket does not exceed the guidelines shown in the following table:

Table 2-1. Maximum Escrow Bucket Capabilities

Coins or Tokens	Escrow Bucket		
	Left	Center	Right
Dimes (.705" Dia.)	55	40	85
Nickels (.835" Dia.)	40	22	65
Quarters (.955: Dia.)	32	20	65
Tokens (.984" Dia.)	25	15	60
Dollar Coins (1.04" Dia.)	16	12	45
Tokens (1-1/8" Dia.)	8	6	25

In order to pay out for more than three denominations, the computer will, under certain circumstances, vend an escrow bucket and hold that bucket door open while the remainder of the required payout is issued directly from the hoppers to the coin cup. (Of course, after the entire amount has been paid, the escrow bucket door will be closed and replenished under the computer's direction.) One further rule is that the right bucket shall never exceed the escrow value of the $10 bills.

As an example of how this works, consider the case where the denominations accepted are $1, $2, $5, $10, and $20. The computer will assign the right bucket the escrow of the $10 bill; a $20 bill will then be an immediate $10 issue followed by $10 of direct payout. The $5 payout will be assigned in the left escrow bucket and the $1 will be assigned to the center – with a $2 payout being an immediate $1 issue followed by $1 of direct payout. If you now enable 25¢ coin acceptance, the escrow amounts would be reassigned: the 25¢ would be assigned to the center bucket, the $1 to the left bucket, and the $5 to the right bucket. A $10 would be paid as an immediate $5 issue followed by $5 of direct payout; the $20 would be an immediate $5 followed by $15 of direct payout. This new feature is available with CCC P/N 65069059.

There are very few payout combinations which cannot be allowed. If you review them briefly, you will easily understand why they cannot be used. *Table 2-2* lists those combinations:

Table 2-2. Acceptance Combinations Which Are Not Allowed

$20	$10	$5	$2	$1[1]	50¢[2]	25¢
OFF	OFF	OFF	OFF	OFF	OFF	OFF
OFF	OFF	OFF	OFF	OFF	OFF	ON
OFF	OFF	OFF	OFF	OFF	ON	OFF
OFF	OFF	OFF	OFF	OFF	ON	ON
ON	OFF	ON	OFF	ON	OFF	ON
ON	OFF	ON	OFF	ON	ON	OFF
ON	OFF	ON	OFF	ON	ON	ON
ON	OFF	ON	ON	OFF	OFF	ON
ON	OFF	ON	ON	OFF	ON	OFF
ON	OFF	ON	ON	OFF	ON	ON
ON	OFF	ON	ON	ON	OFF	ON
ON	OFF	ON	ON	ON	ON	OFF
ON	OFF	ON	ON	ON	ON	ON
ON	ON	ON	OFF	ON	ON	OFF
ON	ON	ON	OFF	ON	ON	ON
ON	ON	ON	ON	OFF	OFF	ON
ON	ON	ON	ON	OFF	ON	OFF
ON	ON	ON	ON	OFF	ON	ON
ON	ON	ON	ON	ON	ON	OFF

Using the rules of operations shown previously, it will be very simple for you to determine the escrow bucket values for any allowable combination. This understanding is only important when using the TEST VEND switches as they only vend and replenish each of the buckets once. As an example, there is no $20 test vend.

[1]$1 bills and coins are treated as the same for these purposes.
[2]Quarters accumulated (25A) are treated exactly as 50¢ pieces for these purposes.

LOADING THE HOPPERS

Review Figure 2-4 before you begin.

1. Pull the hopper forward to its stop point.

2. Twist the top of a full coin bag one full turn. Grasp the twisted top with one hand and hold the bottom of the bag with the other. Invert the bag and insert the top into the mouth of the hopper.

3. Slowly release the twist as the bag empties. Avoid spilling coins into the changer. Empty the bag by grasping it at the bottom and shaking it to dislodge coins in folds of the bag. Push the hopper back into place.

4. Load the change escrow buckets with change by pressing each of the three TEST VEND switches one at a time. Repeat this process for each test switch and verify that the change that was dispensed is correct.

5. Coin I.D. stickers are supplied with the machine to identify the coin denominations in each hopper. Attach one of these stickers on each hopper so that the coin denomination can easily be identified.

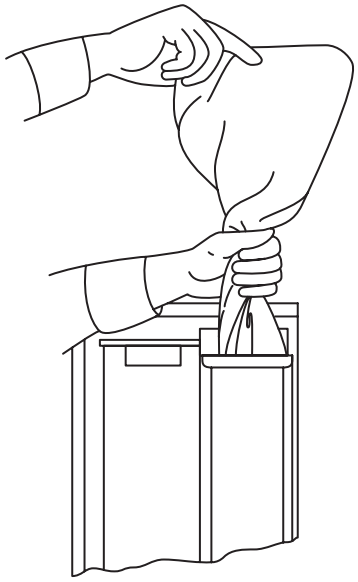

Figure 2-3. Loading the Hoppers

NOTE:

Hoppers may be loaded with either dollar coins, quarters, dimes, nickels, or tokens unmixed depending on the type of hopper used. Make sure that the value of coins loaded into the hopper agrees with the values programmed into the computer during the HOPPER VALUE (HOP VAL) step of the setup.

UNLOADING THE HOPPERS

Refer to *Figure 2-5* and unload the hoppers as follows:

1. Pull the hopper forward to its stop point.

2. Place the opening of the coin bag over the mouth of the hopper, wrapping the lip of the bag around the handle. Grasp the bag and handle with one hand, tilt the hopper back, release the latch, and slowly tip the hopper forward while holding the bag against the front of the hopper.

3. Hold the bag securely while you tip the hopper forward. Tap the hopper against the front shelf and return it to the upright position. Repeat two or three more times to ensure that the hopper is completely empty.

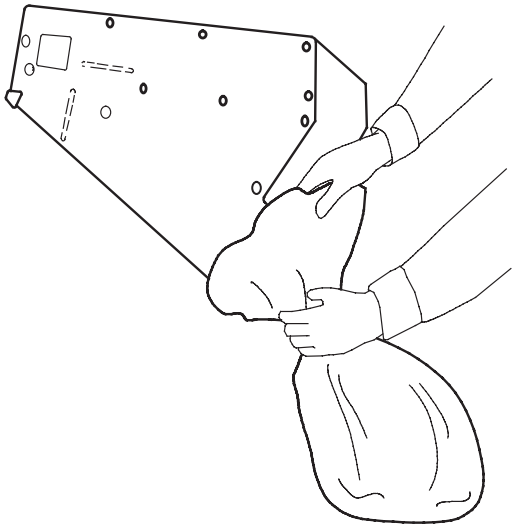

Figure 2-4. Unloading the Hoppers

4. Hoppers may also be removed from the machine and inverted over the bag to empty. When replacing the hopper, be sure it is sitting securely in the pivot brackets and snug against the back plate.

5. Empty the change from each of the change escrow buckets by pressing a TEST VEND switch. When the hopper motors start, turn the bill changer power OFF then ON. Repeat for each of the three TEST VEND switches. This will completely empty the changer of all coins.

OPERATIONAL INFORMATION

The bill and coin changer uses several visual indicators and controls. The location of these controls and indicators are as follows:

ON-OFF Switch	Located on the front of the power control center
Circuit Breakers	Located on the front of the power control center (four total)
Dollars Accepted Counter	Located on the front of the power control center
Test Switches	Located on the front of the power control center (three total)
Voltage LED's	+5 VDC, +12 VDC, +30 VDC, and +40 VDC are located on the front of the power control center
SERVICE/PROGRAMMING Switches	Located on the computer control board
Status Display	Located on the computer control board
BILL RETURN Switch	Located behind the BILL RETURN button on the front of the top door

SETTING UP THE BC-3500

These steps should be followed to set up the BC-3500 to your requirements. If you do not follow these steps, the BC-3500 will remain all or partially programmed to the factory settings.

Quick Setup for a BC-3500 Dispensing Quarters Only

1. Place the programming switch (next to the display on the central control computer) in the up position (programming mode). The display will show "TEMP COUNTERS".

2. Press the FUNCTION button until the display reads "MC PAYOUT" either "ON" or "OFF".

3. Press either of the two far right buttons (∧ or ∨) until the display shows "MC PAYOUT ON".

4. Press the FUNCTION button once and the display will show "HOP VAL" along with three of the following: "- -", "T1", "T2", "T3", "5", "10", "25", "50", "$1".

5. Press the VALUE button until the display shows "HOP VAL 25 25 25".

6. Press the FUNCTION button once and the display will show "ACCEPT $1" with either a "YES" or a "NO".

7. Use either the ∧ or ∨ button to turn the $1 acceptance to "YES" or "NO". (YES to accept $1 bills. NO to not accept $1 bills.)

8. Next press the VALUE button to go through all other denominations you wish to have the changer accept or not accept, and use either the ∧ or ∨ button to turn each one to "YES" or "NO". (You will return to the "ACCEPT $1" statement when you have gone through all denominations.)

9. Press the FUNCTION button once and the display will show the lowest denominations set to "YES" in *Step 8*, and "PAYS __ MC MC".

10. Press either the ∧ or ∨ button until the display shows "PAYS (XX) MC MC", where "XX" equals the number to equal the denomination shown (i.e., 4 for a $1, 20 for a $5, etc.). Press the VALUE button to step through each denomination you have set to "YES" for acceptance, and set the proper payout for each. **NOTE:** $10 or $20 may show 2X some number which will equal the correct amount.

    NOTE: Make sure each denomination set to "YES" for acceptance has the correct payout amount or the message "INCORRECT PAYOUT" will be displayed.

11. Press the FUNCTION button once and the display will show "STACKER MODE SEP" or "ALT" (SEParate or ALTernate).

12. Push either the ∧ or ∨ button to set the stacker to the mode you desire. If set to "ALT", the changer will alternately stack each bill accepted to the upper bill box first, and then to the lower bill box regardless of the denomination accepted. If set to "SEP", each denomination accepted can be assigned to be stacked in either the upper or lower bill box.

13. Perform this step only if you set the stacker mode to "SEP" in the above step. To assign the bills to the upper or lower bill box, press the VALUE button to go through each denomination you have set to "YES" for acceptance, and push either the ^ or v button to stack these bills in either the "UPPER" or "LOWER" bill boxes.

14. Press the FUNCTION button once and the display will show "BILL B CHECK ON" or "OFF". Use the ^ or v button to select either ON or OFF. This is a security check made during the bill validation process. Rowe recommends the "ON" setting for all but the most extreme circumstances where a very high percentage of bills are rejected with Code "B" *(see Section 4)*.

15. Press the FUNCTION button once and the display will show "BILL TEST OFF". Use the ^ or v button to select OFF.

16. Setup is complete! Place the PROGRAMMING switch back down to the "NORMAL" mode. The display will show "STORING NEW DATA", and then the "walking dash" will appear. Fill the hoppers with quarters, do a test vend from each of the test switches: left, center, and right (located on the power control center), and the job is completed.

Normal Setup

This procedure follows the "beginning-to-end" setup sequence. You should follow this procedure and use it until you are familiar with the ten groups of setup options. Once you are familiar with these options, you can easily skip over the options that you do not wish to change or display.

Key Information

In the step-by-step procedure that follows, key setup information follows many of the numbered steps. This information will be very helpful, but it can be skipped. Key information paragraphs are indicated by a small key to the left of the key paragraph.

Turning the Power On

1. Be sure the PROGRAMMING/NORMAL switch on the CCC is in the NORMAL position, then turn the power switch ON. Three of the four voltage LED's on the power control center should now be ON. The +40 VDC LED will be OFF. The OUT OF SERVICE light will be lit.

2. The message "ROWE FAST PAY" will be followed by "VERSION XX" on the display. XX is the version number and should match the version number on the EPROM label, which is visible through the cover of the CCC.

3. The message "CHECKSUM XXXX" will briefly appear on the display. XXXX is the 16-bit EPROM checksum.

4. Next, the "RAM TEST PASSED" (or "FAILED") message will briefly display. If the word FAILED appears, the changer will remain in the OUT OF SERVICE mode.

5. When the "RAM TEST PASSED" message disappears, the CHECKING SYSTEM/SYSTEM CHECK OK "walking dash" will appear. The +40 VDC LED will light and the OUT OF SERVICE light will turn OFF.

Switching to the Programming Mode

Steps 1 and *2* display "audit" information. To enter the PROGRAMMING mode:

1. Move the slide switch on the CCC to the PROGRAMMING mode position.

   The display will change from the "walking dash" to "TEMP COUNTERS". This display will indicate the quantity of each denomination that has been accepted since the numbers were last set to 0. Pressing the VALUE button will cause the display to switch to "TOTAL 25 XXXX". The XXXX will be the total number of quarters accepted since the counter was reset. The denominations are displayed in the following order: 25 (quarters), 50 (half-dollars), $1C (dollar coins), then $1, $2, $5, $10, and $20. The next item displayed is the "AMOUNT $XXX-XX" as described in *Section 1*. If you have set the machine to pay tokens with the MC mode enabled, the "AMOUNT" display will be followed by "TOKENS OUT XXXX". The XXXX will be the total number of tokens dispensed to the customer since the counter was last reset. Pressing the VALUE button again will cause the display to start through the sequence again at the quarter count. Remember that the denomination counts are actually the number of items accepted – the only time a value is shown is at the AMOUNT display.

   The counts previously listed can be reset individually by pressing both of the arrow buttons (∧ and ∨) at the same time. The counts can all be cleared simultaneously by pressing the HOPPER button and the up arrow (∧) button at the same time. The computer will respond with the message "TOTALS CLEARED".

2. Press the FUNCTION button and the display will change to "PERM COUNTERS".

   This display indicated the quantity of each denomination that has been accepted since the machine was built. To use these for periodic audits, you must know the started count and current count and subtract. These quantities **cannot** be reset. If you press the VALUE button, the display will show the denomination and quantity of each denomination accepted.

3. Press the FUNCTION button and the display will change to "PROGRAMMING - - - -".

   This is the display for entering the four-digit access code. Initially, the BC-3500 access code is set to 0000. This is a special access code in that no further entries are required to reach the setup functions described below – simply press the FUNCTION button to advance to the setup functions. If any other code has been entered into the computer, however, access to the setup functions will be denied unless the correct code is entered.

IF NO ACCESS CODE HAS BEEN ESTABLISHED

4. Press the FUNCTION button and the display will change to "MC PAYOUT OFF". Go directly to *Step 5*.

IF AN ACCESS CODE HAS BEEN ESTABLISHED

A. The left two digits of the access code will be blinking. (This is the BC-3500's way of indicating which information will be changed if you make a change.) Press the ∧ or ∨ button to change the left two digits of the four-digit access code.

🔑 The ∧ and ∨ buttons will allow the numbers 00 through 99 to appear in each of the two halves of the four-digit security code.

B. When the display shows the correct two left-hand digits of the access code, press the VALUE button.

C. The right two digits of the access code will be blinking at this time. Press the ∧ or ∨ button until the right two digits of the four-digit access code are correct.

D. When the display shows the correct two right-hand digits of the access code, press the VALUE button and "LEVEL 1 ACCESS" will be displayed. ("LEVEL 0 ACCESS" will be displayed if the incorrect access code is used, and you will be prompted to re-enter the access code.) You can now advance to the setup functions that follow.

TO PROGRAM A DIFFERENT ACCESS CODE

A. If the access code is presently 0000, go directly to Step C which follows.

B. If a non-zero access code is currently in the computer, you must first enter that code as described in the previous paragraphs. Then, using the FUNCTION button, advance through each of the setup and audit functions until "PROGRAMMING ----" is again shown on the display.

C. Enter the desired access code using the ∧, ∨, and VALUE buttons as described in Step C and Step D of the previous procedure. With the desired four-digit code showing on the display*, press and hold the HOPPER button for about three seconds until the message "NEW CODE STORED" appears. The new code has now been stored in the computer's memory and will be the required access code the next time the programming mode is entered.

* NOTE: DO NOT USE ANY CODES BEGINNING WITH 11XX – THESE ARE USED FOR SPECIAL PURPOSES.

5. Turn ON and OFF Maximum Capacity (MC) payout by pressing either the up (∧) or down (∨) button. No other buttons are needed to change the MC mode. The Maximum Capacity mode of operation has three big advantages and one requirement. The requirement is that all three coin hoppers **must** be loaded with the same value coin or token. The advantages are:

   A. The time required to vend and replenish is typically only 1/3 of that required in the NON-MC mode.

   B. All three hoppers will be emptied equally and the machine will not "go empty" until all three have been found to have no coins available.

   C. In the event of a hopper failure (jam, motor failure, etc.), the machine will continue to operate using the other two hoppers.

- Operation in the MC mode can be described simply as follows:

  The computer will get the total required number of coins from any hopper or hoppers that it can. If all three hoppers are operational, it will divide the required payout amount (say 20 quarters for a $5 bill for example) by three and replenish seven coins from each of two hoppers and six coins from the third for the count of 20. In fact, the computer further balances hopper loads by moving the "6" count of the example from the right to center to left hoppers on successive vends.

  Should a hopper go empty, the computer will simply begin using the other two hoppers. If only one hopper remains as "good", the computer assumes the machine is nearly empty and will attempt on successive vends to obtain coins from all three hoppers again – hoping to find that the changer has been filled. If it has, the computer will simply continue using all three hoppers again – if it has not, it will run on the last operational hopper until it is empty, and at that time the machine would go into the OUT OF SERVICE (or SHUTDOWN) mode.

  Operation in the NON-MC mode:

  This mode must be used if the hoppers are loaded with coins or tokens of different values. The count required from each individual hopper must be satisfied during each replenish cycle, or the machine will go into the OUT OF SERVICE (or SHUTDOWN) mode.

6. Press the FUNCTION button and the display will change to "HOP VAL - - - - - -".

- The HOPper VALue option allows you to select the denomination of the coins or tokens that will be dispensed from each hopper *(see Table 2-3 for the list of denominations)*. If a hopper value is set to dashes (- -), that hopper will not dispense any coins at any time.

  The computer must know the value of coins used for one important reason. The BC-3500 supports a "correct payout feature" – the computer simply will not allow you to program a payout that does not total the amount taken in unless you set at least one hopper value to tokens. The correct payout feature prevents programming errors and the resulting over or underpayment.

7. The left two dashes will be blinking. Press the VALUE button to step through the possible hopper denominations. If in the MC mode *(see Step 5 of this procedure)*, all three values will change simultaneously. When the correct hopper value is displayed, press the HOPPER button to advance to the center hopper options if in the NON-MC mode; or press the FUNCTION button to advance to the ACCEPT function if in the MC mode (skip ahead to *Step 10*).

8. The center two dashes will be blinking. Press the VALUE button to step through the possible hopper denominations. When the correct hopper denomination is displayed, press the HOPPER button to advance to the right hopper options.

9. The right two dashes will be blinking. Press the VALUE button to step through the possible hopper denominations. Stop when the correct hopper denomination is displayed.

Use the coin value stickers suppled in the accessories bag to label the hoppers as a reminder of which coins are to be loaded in each hopper.

Table 2-3. BC-3500 Hopper Value Codes

Display Symbol	Money Type
5	Nickel
10	Dime
25	Quarter
$1C	Dollar
T1	Token Type 1
T2	Token Type 2
T3	Token Type 3

10. Press the FUNCTION button and the display will change to "ACCEPT $1 YES" (or "NO").

11. Press either the ∧ or ∨ button to select (turn ON) or deselect (turn OFF) each denomination. Press VALUE to step through the list of denominations that can be accepted *(see Table 2-4 for the list of denominations)*.

Table 2-4. BC-3500 Acceptance

Display Symbol	Money Type
25	Quarter
25A	Two Quarters
50	Half Dollars
1C	Susan B. Anthony Dollar
1	One Dollar Bill
2	Two Dollar Bill
5	Five Dollar Bill
10	Ten Dollar Bill
20	Twenty Dollar Bill

Select only the denominations that you want to have the BC-3500 accept. If you try to select a denomination that would result in a combination which cannot be used, the computer will display the message "NOT ALLOWED" briefly. The combinations which are not allowed are discussed in *Change Payout Programming* in this section *(also refer to Table 2-2)*. Should this occur, you must step through each of the denominations by pressing the VALUE button and review the denominations currently accepted (set to YES).

To accept a new denomination which was previously not allowed, you may first have to deselect a currently accepted denomination and then step to the new denomination (using the VALUE button) and selecting it by using the ∧ or ∨ button.

One selection shown in *Table 2-4* deserves explanation. The 25A option is a "quarter accumulator" feature. If this option is selected, the insertion of a first quarter will cause no payout activity from the bill changer and the coin will appear to be "stolen". However, when a second quarter is inserted, a normal vend and replenish cycle will occur. This allows you to program the bill changer to accept two quarters and payout five dimes, for example.

12. After you have programmed the denominations you wish to accept, press the FUNCTION button to move on to the PAYOUT function.

13. The display will show:

    XXX PAY - - - - - -. The XXX will be the lowest bill denomination set to ON.

    The left digits will be blinking. If in the MC mode, the center and right pairs of digits will simply show MC, and pressing the HOPPER button as described in the following paragraph will have no effect. If in the MC mode and tokens have been selected for the hopper values, see *Dispensing MC Tokens* at the end of this section.

14. Press the ^ or v button to increase or decrease the coin count for the selected hopper. Press the HOPPER button to move from one hopper to the next.

    Once you have the counts set as you want for the displayed denomination, press the VALUE button to advance to the next denomination you chose to accept. If you have made an error and the payout value is not equal to the displayed denomination, the display will briefly show "INCORRECT PAYOUT" and then return to the same denomination – refusing to advance. This is true unless you have set one or more of the hopper values to one of the token values. You will not be able to leave this display, even if you put the PROGRAMMING/NORMAL switch in the NORMAL position. (Upon returning the switch to the PROGRAMMING mode, the display will show "TEMP COUNTERS").

    When the VALUE button is pressed and held for more than two seconds, the display will show "XXX PAYS - - - -:". The XXX represents the current denomination. The - - - - will show TOKENS if tokens are loaded into any hopper; or if only coins are used, the display will show the total dollar value of the coins to be paid out. Once you have programmed the payout for all the denominations being accepted, press the FUNCTION button to advance to the STACKER mode selection.

15. The display will show "STACKER MODE ALT" (or "SEP"). Press either the ^ or v button to switch between ALTernate and SEParate.

    If you choose ALTernate, the BC-3500 stacker will stack one bill in the top bill box and the next bill in the bottom bill box regardless of the bill denomination. No further explanation is needed, go directly to *Step 16* in this procedure.

    If you choose SEParate, the BC-3500 will separate the bills by denomination. Press the VALUE button to select the desired bill box for each denomination selected:

    When the VALUE button is pressed, the display will show "STACK", the lowest bill denomination enabled (usually $1), and the word UPPER or LOWER. Pressing either the ^ or v button will cause the display to change between the two options and, of course, the stacker operations will be as displayed.

    Press the VALUE button to step through all of the accepted bill denominations. Set each one to the bill box of your choice.

16. Press the FUNCTION button to advance to the BILL B CHECK ON/OFF mode selection. Press either the ^ or v button to switch between the ON and OFF mode.

    The normal position for standard validation (BILL B CHECK ON) provides maximum security against bogus bills. This is the factory setting and Rowe strongly recommends its use for all but the most severe environments.

    The BILL B CHECK OFF position improves acceptance of bills which are contaminated with metal chips or dust, but also reduces protection against bogus bills.

17. Press the FUNCTION button to advance to the BILL TEST ON/OFF mode selection. Press either the ^ or v button to switch between ON and OFF.

    The BILL TEST mode will allow you to test bill acceptance without disturbing any of the other machine functions.

    If the BILL TEST is not desired, leave the mode set to OFF and go on to *Step 18*.

    To operate under the BILL TEST mode, leave the option ON then move the slide switch to the normal position. The display will show "STORING NEW DATA", then "BILL TEST MODE". At this time, any bills inserted into the transport will be validated normally. If the bill is accepted, it will be stacked in the bill stacker and the display will show "GOOD $X", where X is the denomination just accepted. The machine will not payout change, will not advance the dollars accepted counter, and will not advance the audit totals while in the BILL TEST mode.

    If a bill is rejected, the display will show the normal reject message. See *Section 4* for an explanation of the reject messages.

    There are three ways to leave the BILL TEST mode: You can go back into the PROGRAMMING mode and set the BILL TEST mode to OFF, or you can simply turn the POWER switch OFF then back ON. The third way is a safety feature where the machine will automatically return to the NORMAL mode two minutes after the last test bill was inserted (remains "IDLE" for 2 minutes).

18. Pressing the FUNCTION button will send the computer back to the beginning of the entire programming sequence ("TEMP COUNTERS" will show on the display) and you may review your setup by stepping through each function again.

To return the bill changer to normal operation, move the slide switch from the PROGRAMMING position to the NORMAL position. The display will show "STORING NEW DATA" and then the "walking dash" again.

SELF-DIAGNOSTICS

Diagnostic Check

The self-diagnostic check features of the BC-3500 are centered around the 16-character status display. The message displayed may be on all the time (STEADY STATUS MESSAGE), or it may blink on and off (FLASHING FAULT MESSAGE).

Fault Message Check

1. Remove the right hopper from the machine. Block the right coin detector on the dispenser with an opaque object – a coin, for example. The machine will go out of service. The status display will flash the message "CK R COIN DETCTR" and the TEMPORARILY OUT OF SERVICE light on the top door will light.

2. Restore the machine to service by removing the object that is blocking the detector and pressing the FUNCTION button.

3. The CCC will remove the fault message and the machine will return to service.

4. Replace the hopper.

For detailed explanations of the various fault messages, refer to *Section 4: Troubleshooting*.

Status Messages

When a message is on the status display and it is not flashing, either a fault or malfunction occurred that was not serious enough to cause a shutdown or the message is a guide to solving bill acceptance problems.

NON-SHUTDOWN FAULTS

If a malfunction is detected with the coin switches, TEST switches, or the BILL RETURN switch, a message will be displayed but the machine will not go out of service.

BILL ACCEPTANCE MESSAGES

A bill may be rejected for a number of reasons. The status display will indicate the reason why a bill failed to be accepted. A number of cell sequence rejects and bill validation rejects exist. These messages will be displayed for approximately thirty seconds before they are erased by the walking dash. For more information on the reject messages, refer to *Section 4: Troubleshooting*.

TRANSPORT SELF-CLEAR CHECK

If a bill becomes jammed in the transport, the BC-3500 automatically tries to clear it out. To check out this feature:

1. Insert a bill into the transport upside down. The bill will be rejected and the status display should show "REJECT-BILL (A)".

2. Hold the bill in the transport. Do not uncover the VI cell. Wait five seconds for the transport to start to cycle reverse-forward-reverse-forward-reverse. The transport will do this three times if the VI cell is kept covered. During the self-clear operation, the status display will show the message "PURGING ACCEPTOR".

3. The motor will stop and the status message will change to "CK TRANSPORT VI". (If the VI cell is uncovered any time during the self-clear cycle, the machine will automatically go back into operation.

4. Restore the machine to service by removing the bill.

ACCEPTANCE CHECK

To aid in checking acceptance, set the BILL TEST mode to ON. This will allow checking out the validation portion of the system without paying out coins.

NOTE:

The bill acceptor may reject bills if a bright light source shines into the transport. Close the top door of the changer to prevent this problem.

1. Make certain that the bill is programmed to be accepted.

2. Insert a dollar bill upside down. The bill should reject and the display should show "REJECT-BILL (A)".

3. Insert the dollar bill correct side up, but backwards. The bill should reject a message "REJECT-BILL (B)". (Be sure BILL B CHECK is ON.)

Now insert the dollar correctly. It should accept and the stacker should operate.

Also, as the bill moves through the bill acceptor, check to ensure that the following messages are shown on the status display:

1. "VALIDATING" will appear as the bill is inserted and while the transport is running.

2. "GOOD $1" will appear when the bill is validated and stacked.

3. If bills in good condition are rejected frequently, note the reject message on the status display and refer to *Section 4* for troubleshooting information.

4. If the machine is set up to accept other bills, the previous checks should also be performed with all other denominations.

   When the other denominations are accepted, the display will show "GOOD $XX", where XX represents the denomination.

DISPENSING TOKENS

A unique situation exists when dispensing tokens while in the MC mode. The ability to payout a progressive bonus is allowed, even if payout is normally an extended vend of a lower denomination.

Normally, in the NON-MC mode or when paying out coins, some denominations require an extended dispense–direct payout–replenish cycle. In each of these cases, the larger denomination is paid out at exactly two times a lower denomination. While this is correct for dispensing coins, it may not be desired when dispensing tokens.

For ease of discussion, an example will be presented below that will explain the setup and operation for progressive bonus payouts of tokens.

In the following example, the denominations listed will be accepted and the number of tokens listed will be dispensed:

Denomination	Base Tokens	Bonus Tokens	Total Tokens
$1	4	0	4
$2	8	1	9
$5	20	5	25
$10	40	15	55
$20	80	40	120

Following the payout programming rules discussed earlier in this section, the right escrow bucket will hold the $10 load of 55 tokens, the left escrow bucket will hold the $5 load of 25 tokens, and the $1 load of 4 tokens will be held by the center escrow bucket.

Be sure MC PAYOUT is set to ON and the HOPper VALue for the hoppers is set to one of the three token values: T1, T2, T3. Set $1, $2, $5, $10, and $20 to YES in the ACCEPT mode. All coin denominations except $1 coins must be set to NO.

Press the FUNCTION button to move to the PAY mode with the display showing "$ PAY XX MC MC". Use the up and down arrow buttons to set the payout to 4. Push the VALUE button to display the $2 payout. The display will show "$2=8+X BONUS". Push the up and down arrow buttons to set the X to the value of 1. This display indicates that a $2 will payout 8 (which is twice the $1 payout) plus one bonus token.

Push the VALUE button to display the $5 payout. Use the up and down arrows until the display indicated 25 tokens.

Push the VALUE button to display the $10 payout. Use the up and down arrows until the display indicated 55 tokens.

Push the VALUE button to display the $20 payout. The display will show "$20=110+X BONUS". Use the arrow buttons to change the value to 10. This indicates that $20 will pay 110 (twice the $10 payout of 55 tokens) plus 10 more bonus tokens for a total of 120.

Because the $2 and $20 payouts are extended vends of lesser amounts, the first vend will contain the number of tokens set for the lesser amount. The direct payout amount will contain the tokens for the lesser amount plus the bonus tokens. These are then followed by a replenish cycle for the lesser amount.

Bonus payouts for double vend amounts are only allowed in the MC mode with tokens loaded in the hoppers.

Token Control

When dispensing tokens using the bonus payout, it is difficult to maintain token count control. The amount of money changed does not directly indicate the number of tokens dispensed. In the MC mode, a special token counter is used. This counter counts the number of tokens dispensed. To view the count, push the VALUE button while the changer is in STANDBY (walking dash). The display will show "AMOUNT $XX".

Push the VALUE button again and the display will show "TOKENS OUT XXXX", where the XXXX is the number of tokens actually paid out. TOKENS OUT will increase to a maximum of 65,535 and will then "roll over" to 0.

The token counter is also available in the PROGRAMMING mode under TEMP COUNTERS. Push the VALUE button and step through all counters until "TOKENS OUT XXXX" is displayed. At this time, the count may be cleared by pushing the two arrow buttons simultaneously.

There may be an occasion when the hopper became empty during the direct payout cycle of an extended vend. When this happens, the token counter will actually count only the number of tokens issued on the initial escrow dump (i.e., for the lower value). The changer will enter an OUT OF SERVICE condition with the display showing "HOPPERS EMPTY". After that error has been cleared (by pressing the FUNCTION button), the message "AMOUNT DUE X Y Z" will be displayed: X = the number of coins/tokens due the last customer from the left hopper (or all hoppers if using MC mode), Y = the number of coins/tokens short from the center hopper, and Z is likewise for the right hopper.

FAST-FEED SHUTDOWN

The Fast-Feed Shutdown feature of the bill changer allows an operator to limit the number of payments made by the changer within a given amount of time. This can be used to discourage non-customers from using the changer as their bank. If you suspect that someone is draining your changer for purposes other than to purchase your products, you can use this feature to limit such activity.

The changer monitors the bills as they are accepted. If the Fast-Feed feature is enabled and bills are being fed faster than the rate you've established, the changer will go OUT OF SERVICE for a period of time that you have chosen and will then resume normal operation. The settings are made by individual denomination and there is also a setting for all denominations combined.

You can visualize these settings this way: If the changer accepts more than X bills in Y minutes, then go OUT OF SERVICE for Z minutes. There is also a setting which will put the changer OUT OF SERVICE permanently.

When a bill is inserted that causes your settings to be exceeded, it will be rejected with the display showing "REJECT-FAST FEED", and then the changer will enter the OUT OF SERVICE mode displaying "FFden dhh=mm AGO": where den = the offending denomination or ALL, d = the number of days, hh = the number of hours, and mm = the number of minutes that have passed since the changer went OUT OF SERVICE for this reason. This time will continue to increment and will be displayed even after the temporary shutdown condition expires and the changer goes back into normal service – it can only be cleared by pressing the FUNCTION button. (When you clear this timer, the display will briefly show "FSFD TIMER CLR'D".)

Note that the Fast-Feed information is maintained in memory until it is manually cleared by using the FUNCTION button. This applies even if another OUT OF SERVICE condition occurs. As an example, if the Fast-Feed Shutdown condition is entered at 11PM on Saturday and the changer returns to service 10 minutes later and continues to operate until 3PM on Sunday when it runs out of coins, the display will be flashing "HOPPERS EMPTY" on Monday morning at 9AM. When the FUNCTION button is pressed to clear the empty error, the display will revert to "FF$20 1D10=00 AGO", which allows you to determine that a Fast-Feed shutdown occurred because the $20 bill count was exceeded at 11PM Saturday (1 day and 10 hours ago).

Accessing the FAST-FEED Menu

1. Move the PROGRAMMING/NORMAL switch on the bill changer from the NORMAL operation mode to the PROGRAMMING position.

2. Press the FUNCTION-ERROR RESET button twice. The display should show "PROGRAMMING ----".

3. Press the ∧ button until the display shows "PROGRAMMING 11--", the press the VALUE button once.

4. Press the ∧ button until the display shows "PROGRAMMING 1129".

5. Press the VALUE button once. The FAST-FEED menu is now active.

Navigating the FAST-FEED Menu

1. When entering the FAST-FEED menu, the display will show "$1 OFF". The OFF should be flashing. If not, press the ∨ button until the OFF appears. This means that no limit has been placed on any specific number of $1 bills.

2. Pressing the ∧ button will cause the display to show "$1 X, Y, Z". The X should be flashing. *Table 2-5* illustrates the possible values for X, Y, and Z.

Table 2-5. XYZ Table

Variable Name	Represents	Range
X	The number of bills accepted before any action is taken.	"OFF" or 1 - 15 bills
Y	The number of minutes within which no more than "X" bills can be accepted without action.	1 - 15 minutes
Z	The number of minutes that the bill changer will be kept OUT OF SERVICE if more than "X" bills are accepted within "Y" minutes.	1 - 15 minutes or "INFINITE"

3. Use the ∧ and ∨ buttons to establish the maximum number of bills to accept ("X"), then press the HOPPER button and "Y" will begin flashing. Use the ∧ and ∨ buttons to set the time lime (in minutes) for the changer to accept "X" bills. Pressing the HOPPER button again will cause "Z" to begin flashing. Use the ∧ and ∨ buttons to select the number of minutes for the changer to remain shutdown should the limits be exceeded. Note that choosing the INF setting will require you to open the changer and press the FUNCTION button in order to restore the changer to service.

4. Pressing the VALUE button will cause the next enabled denomination to be shown. Repeat *Step 3* for each of these denominations.

5. Pressing the VALUE button after you've established the limits for the highest denomination enabled will cause the display to show "ALL OFF". Using the ∧ and ∨ buttons as before, you can establish limits for all accepted bills regardless of denomination.

6. Press the VALUE button to step back through your settings. When you have everything set as you like, slide the PROGRAMMING/NORMAL switch to the NORMAL position

ANTI-PULLBACK SYSTEM

Certain Changers may be repeatedly exposed to vandals attempting to cheat the machine by inserting a bill and then, after collecting the change, attempting to retrieve that bill by pulling it back out of the stacker using an attached string. The changer provides several mechanical and electrical systems to prevent anyone from being successful in these attempts, but such activities could lead to jams in the transport and the attendant service calls.

As an added deterrent the changer allows you to set up a special temporary OUT OF SERVICE condition if the computer detects that the transport motor has moved during a time when it was turned off.

If this feature is enabled, the computer monitors the encoder signal of the transport motor during periods when the motor should not be turning. The action of pulling a previously accepted bill from the machine will invariably cause the motor to be turned. Even a very slight movement will be detected, and when it does the Control Computer takes the following action:

The motor is instantly turned ON in the reverse direction. This will assist in keeping the transport free of jams. The Display will "freeze" and the motor will continue to run in reverse for about 3 seconds. At this time the changer will go OUT OF SERVICE with the display showing "PLBK dDhh=mm AGO", where dD = the number of days, hh = the number of hours, and mm = the number of minutes that have passed since the changer went OUT OF SERVICE for this reason. This time will continue to increment and will be displayed even after the temporary shutdown condition expires and the changer goes back into normal service – it can only be cleared by pressing the FUNCTION button. (When you clear this timer, the display will briefly show "PLBK TIMER CLR'D".)

CAUTION!

When this feature is enabled, do not attempt to turn the transport motor drive gear manually with the transported connected and the Power ON. As described above, the motor will start instantly when motor movement is detected.

Accessing the ANTI-PULLBACK Menu

1. Move the PROGRAMMING/NORMAL switch on the bill changer from the NORMAL operation mode to the PROGRAMMING position.

2. Press the FUNCTION-ERROR RESET button twice. The display should show "PROGRAMMING ——".

3. Press the ^ button until the display shows "PROGRAMMING 11—", the press the VALUE button once.

4. Press the ^ button until the display shows "PROGRAMMING 1130".

5. Press the VALUE button once. The ANTI-PULLBACK menu is now active.

Navigating the ANTI-PULLBACK Menu

1. When first entering the ANTI-PULLBACK menu, the display will show "PULLBK SHTDN OFF". This means that the computer is not monitoring the transport motor for unexpected movement..

2. Pressing the ^ button will cause the display to show "PULLBK SHTDN 1". This means that the computer will now be watching for unexpected transport motor movement, and will take the changer OUT OF SERVICE for 1 minute should any such activity occur.

3. Using the ^ and v buttons, set the number of minutes of shutdown time desired. The maximum number of minutes can be set at 98; if you increment once more using the ^ button, "INF" will be displayed indicating that if an incident is detected, the changer will stay OUT OF SERVICE until in is manually reset with The FUNCTION-ERROR RESET button.

MISCELLANEOUS

The BC-3500 was designed to be simple and easy to troubleshoot. Please take time to study the operation of the machine and to study the explanations of the various status messages.

The following is a list of incidental characteristics that may be of interest to the operator and service person:

1. Both the coin acceptor and the bill acceptor are blocked out during the dispense and replenish cycle. Also, the coin acceptor is locked out during the bill validation cycle as soon as the VI cell is covered. The coin acceptor is locked out whenever no coins are programmed to be accepted.

2. The +5 VDC voltage from the power supply does not control the CCC board. It is used to provide voltage to LED's (dispenser, transport, OUT OF SERVICE light), and the solid-state coin switch assembly. The computer board is powered primarily by the +8 VDC voltage from the power supply. It has its own +5 VDC regulator.

3. The BILL RETURN switch is disabled during the latter portion of the validation cycle and the entire dispense and replenish cycles.

4. If power is disrupted during a dispense or replenish cycle, the machine will immediately reset upon power turn on. There will be an incorrect change load in one of the buckets. This is the same as all previous Rowe changers.

5. If the changer runs empty while paying for a large bill directly from the hoppers, the display will be flashing the appropriate message. Upon clearing the SHUTDOWN CODE for this empty condition the display will show "AMT DUE X Y Z" with X, Y, and Z being the number of coins or tokens that the customer was shorted from the left, center, and right hoppers respectively.

6. Blocking the coin photodetectors with your fingers or with foreign objects during the replenish cycle may result in wrong counts. If the detectors are blocked too long, the machine will shut down with a flashing error message indicating which detector was blocked. If the wrong count is entered ,the display may show a flashing message "EXTRA COIN". Either condition will put the machine in a shutdown mode.

7. Always turn the power OFF when removing circuit boards. Avoid touching the connectors when handling these assemblies.

WARNING:

When the machine is turned on, there is 120 VAC voltage on the computer control board. If, for any reason, this board is plugged in without its cover on, BE CAREFUL!

Section 3: Routine Service

INTRODUCTION

In order to maintain control over money used for change dispensing, each changer should be loaded with a predetermined amount of cash. The inventory should be checked monthly as a precaution against malfunction and theft. Inventory control is most easily accomplished by using the replacement method of servicing. Using this method, all bills and coins are removed by the route man and the empty hoppers are refilled with a predetermined amount of change. The money removed is returned and all cash is counted against the charged inventory. Any discrepancy is easily detected at this time.

Service frequency on the changer is directly related to the inventory of change maintained and customer usage. Check changer usage daily and schedule service as required.

REMOVING A JAMMED BILL FROM THE BILL ACCEPTOR

Jammed bills can be easily removed in the following manner:

1. Unlock and open the top door. Turn the power OFF.
2. Slide the bill acceptor out until it stops.
3. Remove the jammed object from the acceptor.

BILL JAMMING CHECK LIST

If bills jam frequently, perform the following checks and corrective procedures *(see Figure 3-1)*:

1. Make sure that all belts stay centered on all rollers when the transport is running in either the forward or the reverse direction.
2. Check to see that both timing belts are snug (not too loose or too tight).
3. Make sure that the rubber drive rollers are not loose or worn.
4. Exit flipper must work freely.
5. Be sure that the inlet Nylon idler roller rotates freely and moves up and down freely in its slot. The retaining springs must also slide without bind in the guide slots and exert adequate force on the idler roller.
6. Bottom track bill surfaces must be free of dirt, moisture, burrs, projections, rough spots, etc., which might drag or hang up on the surface of bill.

7. The magnetic head must have a bevelled edge on both front and back to keep both bill edges from becoming caught in forward or reverse.

8. Nylon rollers on the magnetic head assembly must rotate freely. No dirt, moisture, burrs, projections, or rough spots can be on the magnetic heads or magnetic head holder.

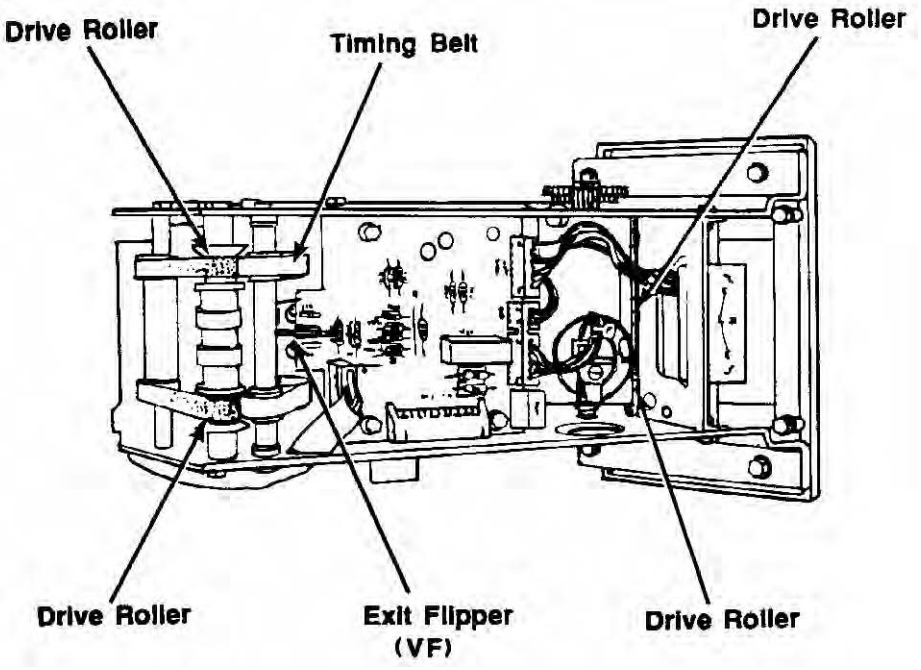

Figure 3-1. Transport Check Points

FILLING AND EMPTYING THE BC-3500

The dispensing mechanism operates on an escrow principle. Change for a vend must be in the escrow buckets when the customer inserts a bill. After change is dispensed, the buckets must immediately refill for the next customer. Because of this, certain steps must be followed when filling or emptying the changer, or when resetting the changer if it has shut down.

FILLING THE CHANGER

When filling a changer that is empty, the coin buckets must be filled with their proper load of coins before the machine can be put into operation. After the hoppers have been loaded and are in place:

1. Turn the power switch ON and depress the LEFT TEST SWITCH once. This will start the hoppers and load the left coin bucket with the proper coins.

2. Wait until the hopper motors have all stopped and press the LEFT TEST SWITCH again. Proper change should be dispensed and hopper motors will start to refill the bucket again.

3. Repeat steps 1 and 2 for the CENTER TEST SWITCH and RIGHT TEST SWITCH. The machine should now be ready for operation.

EMPTYING THE CHANGER

To empty the changer of all coins, first empty all hoppers according to instructions on the label on the top door. When the hoppers are emptied, some coins will remain in the change buckets. Press the test switches, one at a time, to release these remaining coins. Turn the power switch OFF and then ON between each test switch operation.

COIN INLET CLEANING PROCEDURE

A unique coin inlet design incorporates a built-in clean-out feature. Clean the inlet as follows:

1. Remove the screw *(A)* from the lower front side of the inlet as shown in *Figure 3-2.* Hold the tab as shown in *Figure 3-2, reference B* and rotate the clean-out guide up and out of the way as shown in *Figure 3-3, reference B.*

2. One side of the inlet is clear plastic to permit viewing the interior. Insert the end of a wire coat hanger *(Figure 3-3, reference A)* into the slot and drag out the jammed material through the front opening *as shown in Figure 3-3.*

3. After clean-out, rotate the guide back down into place and replace the screw.

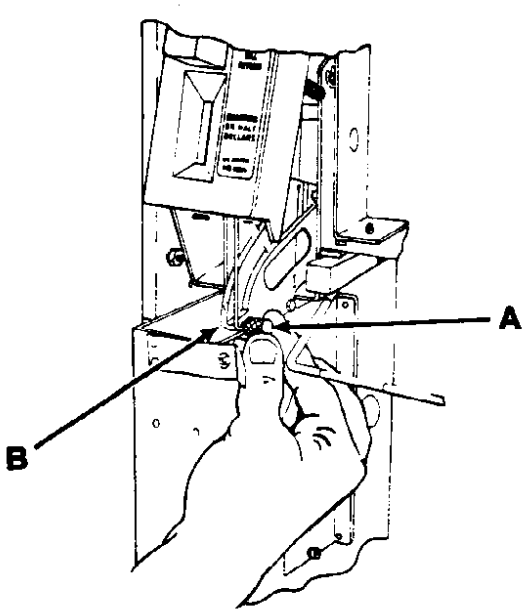

Figure 3-2. Removing the Coin Inlet Screw

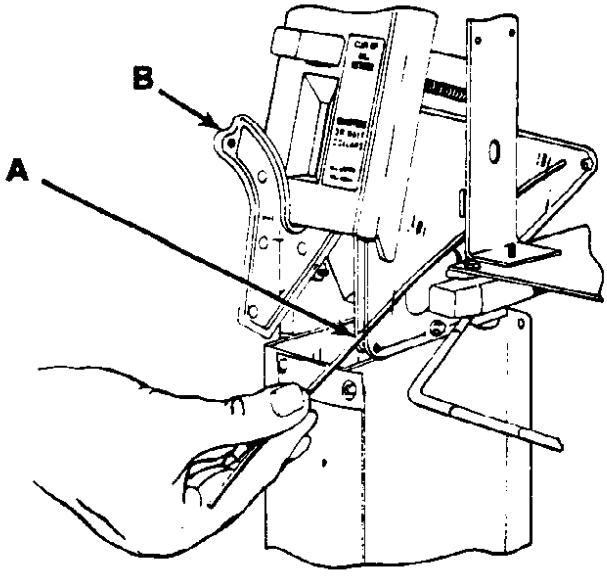

Figure 3-3. Cleaning the Coin Inlet

CLEANING THE HOPPER COIN PATH

The coin tracks are Teflon coated to minimize dirt buildup. It may still be necessary to clean them at regular intervals, as dictated by the number of vends and the environment, to prevent dirt accumulation in the coin path.

Failure to keep the coin path clean may result in coins sliding out of the track, indicating an empty condition even though the hopper contains sufficient coins. Clean the hoppers as follows:

1. Remove the hopper from the bill changer and place it on a working surface.

2. Remove all the screws pointed out in *Figure 3-4B*, and lift the back chain plate assembly up so that the tab (enlarged below) can be pulled through the right hand side plate of the hopper assembly. Pull the chain plate assembly straight back out and you will now be able to access the coin path more easily for cleaning.

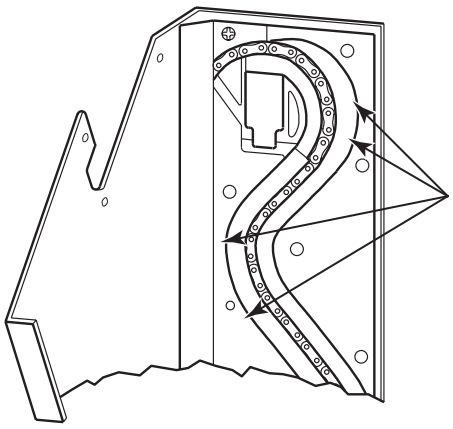

Figure 3-4A. Cleaning the Hopper Coin Path

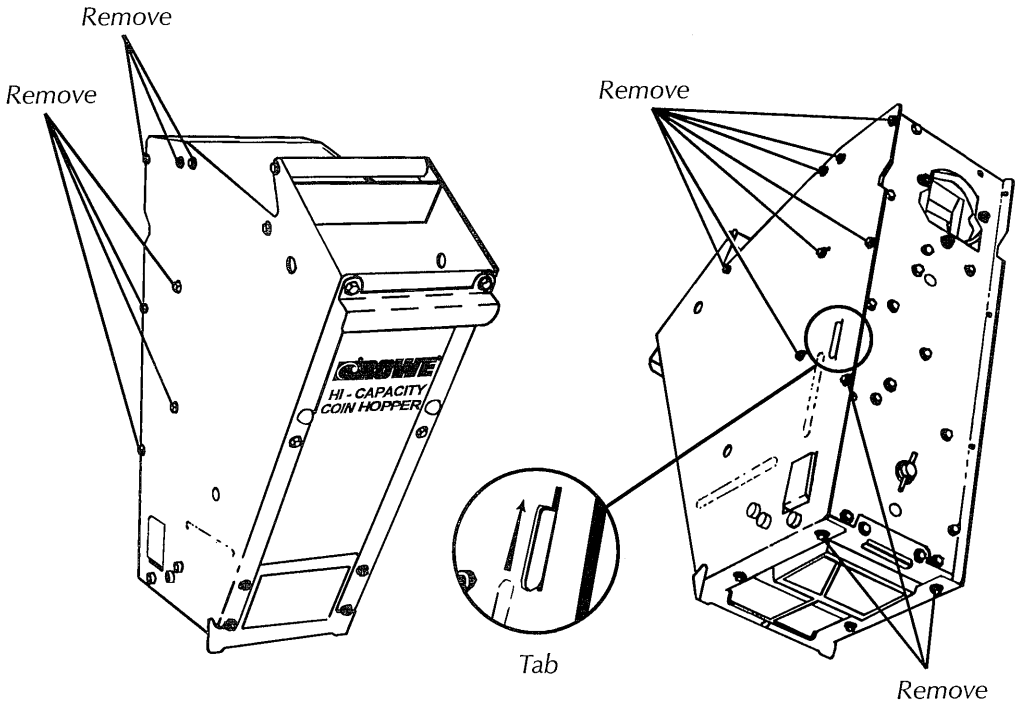

Figure 3-4B

WARNING:

Chain lubrication is not normally required or recommended. Do not use detergents to clean the hopper. The hopper has been factory lubricated and detergent cleaners may destroy this lubrication.

3. Using the Nylon hopper cleaning brush supplied with each machine, remove all dirt from the angular sides and flat surfaces of the serpentine coin path as shown in *Figure 3-4A*.

4. Reassemble the hopper (when finished cleaning) by replacing the back chain plate assembly and starting all screws removed. Once all screws have been started, they may then be tightened. The screws must be tightened in sequence as shown in *Figure 3-4C*.

5. Install the hopper in the bill changer and make a test vend to check for proper hopper operation.

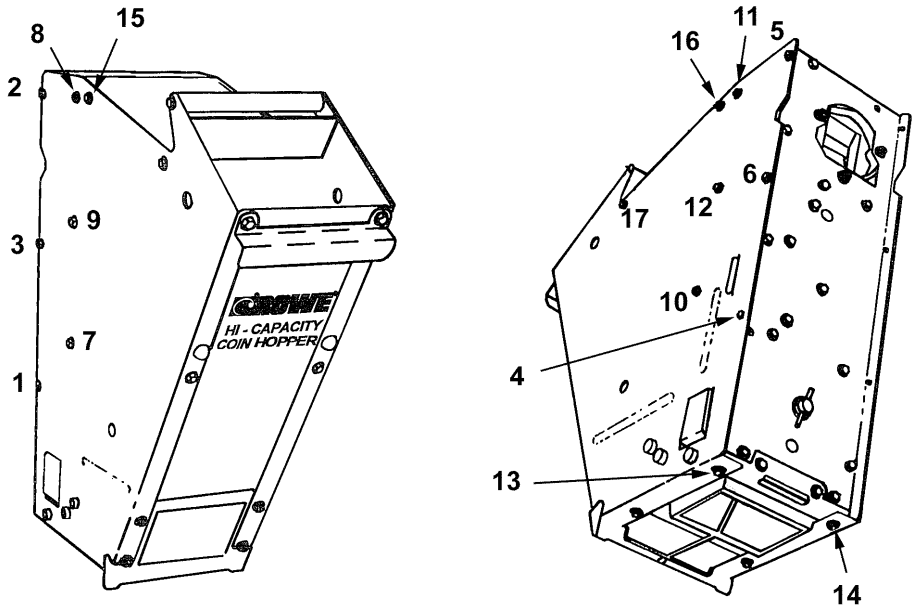

Figure 3-4C

CHANGE BUCKET LUBRICATION

The coin dispenser change bucket door pivots, links, hubs and bell cranks are factory lubricated with light machine oil. Rowe specification Number 00137900 oil or 3-in-1 Electric Motor Oil can be used. If change bucket is worn beyond repair, order and install one of the kits listed at the end of the Parts Catalog in this manual.

For the most reliable performance, the lubrication should be renewed annually by applying one drop of oil at the points shown in *Figure 3-5*.

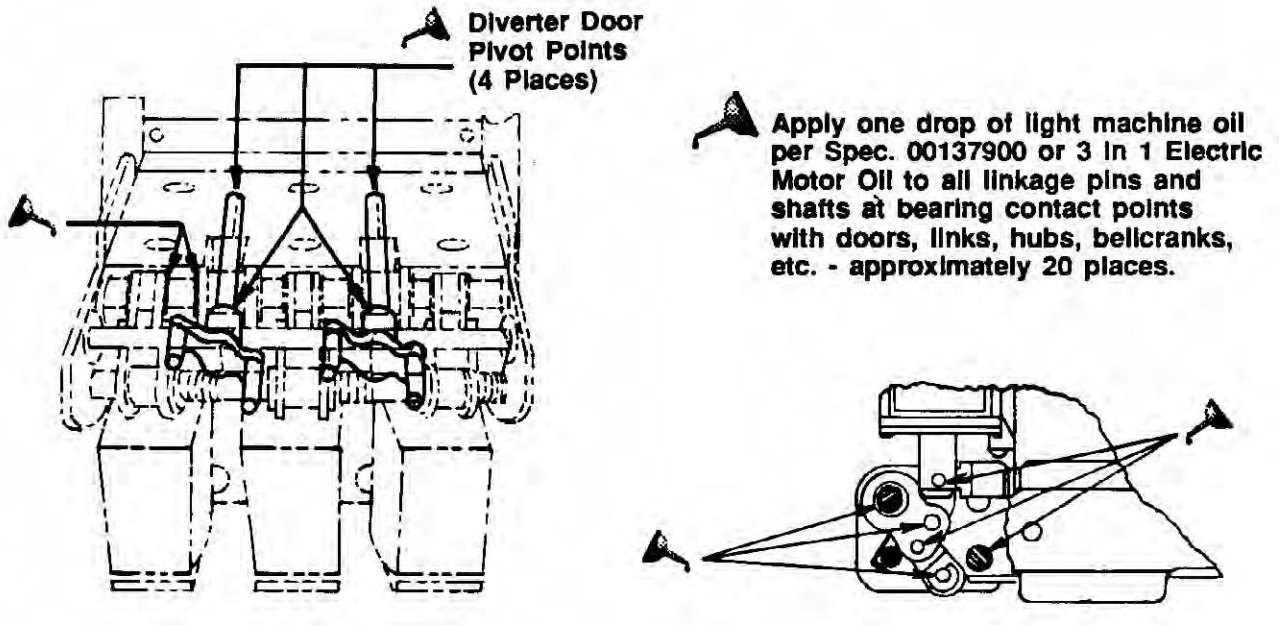

Figure 3-5. Change Bucket Lubrication

TEST PROCEDURES

Checking a Bucket Solenoid

A solenoid that looks discolored or burned should be checked. Unplug the solenoid from the circuit before taking any measurements. A good solenoid should measure approximately 8.5 ohms.

Transport Motor Speed Check

The BC-3500 transport motor speed and direction are computer controlled. No adjustments can be made, however the encoder on the back of the motor can be checked. The computer detects pulses from this encoder for speed control.

1. **Be sure that the Anti-Pullback feature is disabled before performing this check!**

2. Remove the transport from the machine, but keep it plugged in and keep the bill changer power ON.

3. Turn the transport over and connect the Common lead of a voltmeter to P701, Pin 10. Connect the other lead to P701, Pin 9. Turn the transport motor drive shaft very slowly by hand. The meter should alternately read voltages below 0.7 VDC then above 3.8 VDC.

4. One rotation of the motor drive shaft will produce 100 pulses.

5. If you were using the Anti-Pullback feature, be sure to re-enable it.

Testing BC-3500 Transport Photocells

The transport photocells are automatically checked each time the transport is turned on. Each photocell and light combination goes through a short test and brightness adjustment process. This process continues as long as the transport receives power. No adjustments can be made; however, a bad photocell can be detected with a voltmeter. The following measurements are all made with the Common lead of the voltmeter connected to P701, Pin 10 on the transport (the voltmeter should have a 10 megohm impedance).

Photocell	Action	Voltage Expected
VI - Transport Inlet	No Action - Leave the inlet open	P701, Pin 7 should be between 0.2 VDC and 1.9 VDC
	Block the light path by inserting paper or a bill into the transport opening	P701, Pin 7 should increase at least 0.5 volts from the reading taken with the inlet open. The transport motor should start running forward. Hold the bill in place until you finish the reading, then remove the bill and let the transport finish cycling.
VF - Flipper Cell	No Action - Leave flipper in rest position	P701, Pin 5 should be less than 1.0 VDC
	Block the light path with the flipper	P701, Pin 5 should be greater than 2.8 VDC
VT - Transmissive Cell	No Action - Leave the light path open	P701, Pin 4 should be 0.74 VDC to 1.25 VDC
	Block the light path by inserting paper or a bill between the transmissive cell and the transmissive/reflective LED in the middle of the transport	P701, Pin 4 should increase by at least 0.75 VDC from the reading taken with the light path open
VR - Reflective Cell	No Action - Leave the light path open	P701, Pin 6 should be between 0.8 VDC and 2.0 VDC
	Insert a white piece of paper between the transmissive cell and the transmissive/reflective LED in the middle of the transport	P701, Pin 6 should increase by at least 0.25 VDC from the reading taken without white paper inserted.

Coin Counting Phototransistor (Detector) Check

1. Turn the bill changer POWER switch OFF.

2. Remove the black plastic cover from the phototransistor and connect the Common meter lead to the metal dispenser backing plate as shown in *Figure 3-6A*.

3. Connect the + meter lead to the blue wire. (*See Figure 3-6A*).

4. Turn the POWER switch ON and check that the LED's are lit. The meter should indicate between 4.7 and 5.2 volts DC.

If the meter indication is not correct, the voltage regulator VR801 on the power supply board (Part Number 70036501) may need replacement.

5. If the meter indication in Step 4 is correct, continue this procedure. If the voltage was not between 4.7 and 5.2 volts, repair the malfunction before you continue.

6. Move the + meter lead to the orange wire on the phototransistor as shown in *Figure 3-6B*. The meter should indicate between 3.5 and 5.0 volts DC.

If the voltage is less than 3.5 volts, replace the phototransistor board assembly with Part Number 25175702.

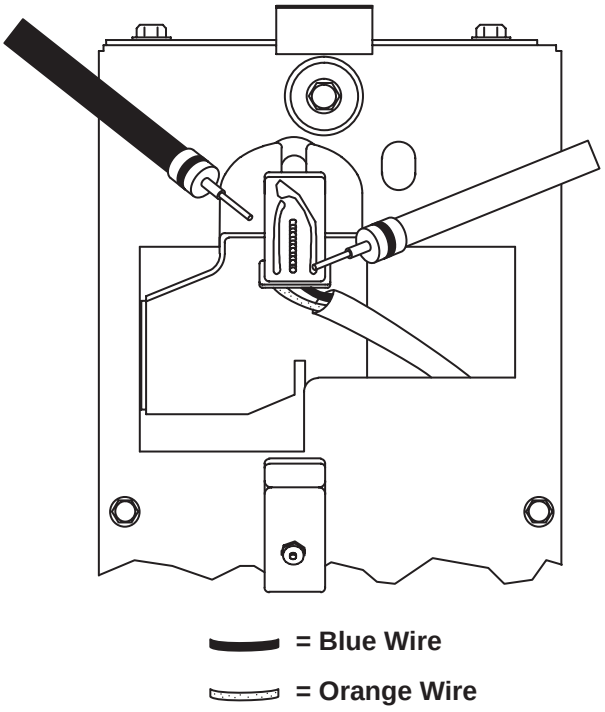

Figure 3-6A. Sensor Check

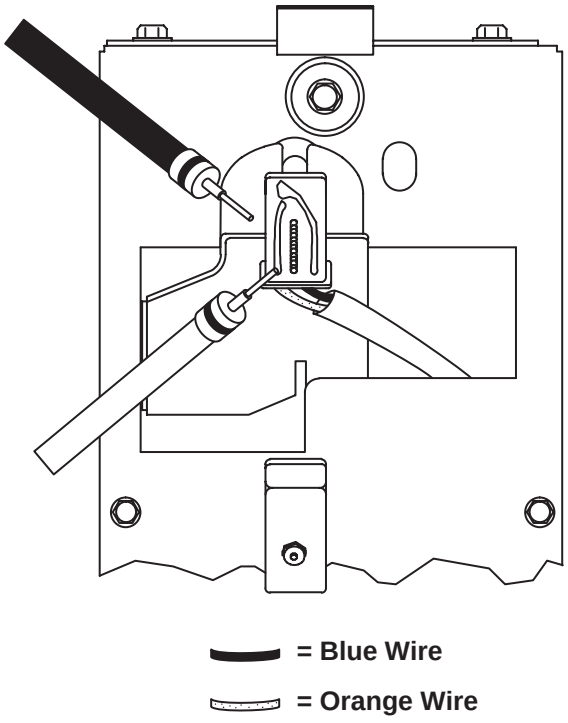

Figure 3-6B. Sensor Check

ADJUSTMENTS

Bill and Coin Return Switch Assembly

COIN INLET TO TOP DOOR CLEARANCE

Make this adjustment if the gap between the bill and coin return switch plate and the door is excessive, or if the bill and coin return switch assembly has been removed.

Refer to Figure 3-7 as needed for this procedure.

1. Open the top door.
2. Loosen the two screws on the side of the partition as shown in *A*.
3. Loosen the three screws on the top of the bill and coin return switch as shown in *B* just enough that the bill and coin return switch assembly can slide forward and backward easily.
4. Slide the bill and coin return switch assembly as far forward (toward you) as possible.
5. Slowly close the top door and latch it. This will push the bill and coin return switch assembly back, so that it is in the correct position (flush with the door trim).
6. Open the top door and tighten the two screws *(A)* on the side of the assembly.
7. Tighten the three screws at *B*.
8. Close the top door again to recheck the clearance, and repeat *Steps 1 through 7* if necessary.

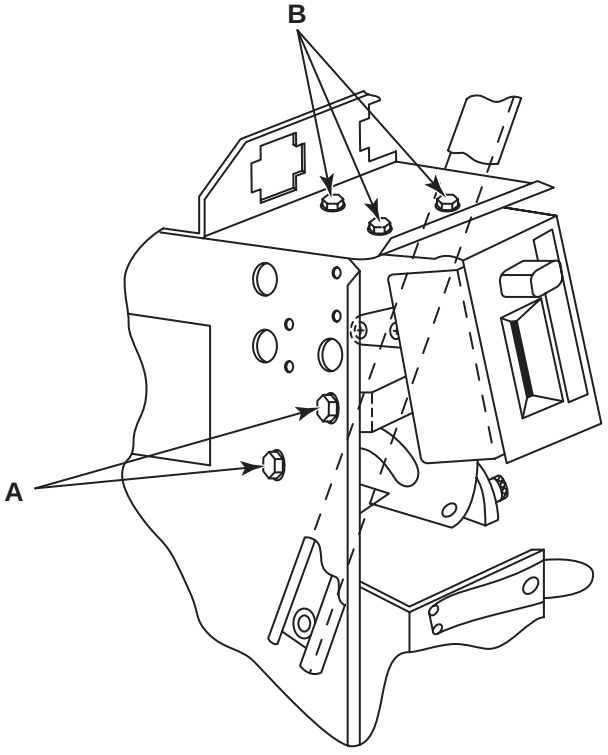

Figure 3-7. Coin Inlet Top Door Clearance

BILL RETURN SWITCH ADJUSTMENT

Refer to *Figure 3-8* for this service check and adjustment. This switch must be in the actuated condition (the plunger is pushed in) when the machine is in standby and the BILL AND COIN RETURN button not depressed.

The switch should transfer and put the bill acceptor motor in reverse when the BILL AND COIN RETURN button is depressed slightly (1/8 to 1/4 inch). If adjustment is necessary:

1. Open the top door.
2. Locate the two return switch mounting screws at *A*.
3. Insert a small (#1) Phillips screwdriver through the side of the partition as shown in *Figure 3-8, reference B* and loosen both of the return switch mounting screws. Loosen the mounting screws only enough to allow the front end of the switch to rotate freely.
4. Pull the front (near you) end of the switch down as far as it will go, then push the switch upward until the switch "clicks."
5. While holding the switch in place, tighten the two switch mounting screws.
6. Check for proper operation and repeat *Steps 3 through 5* if necessary.

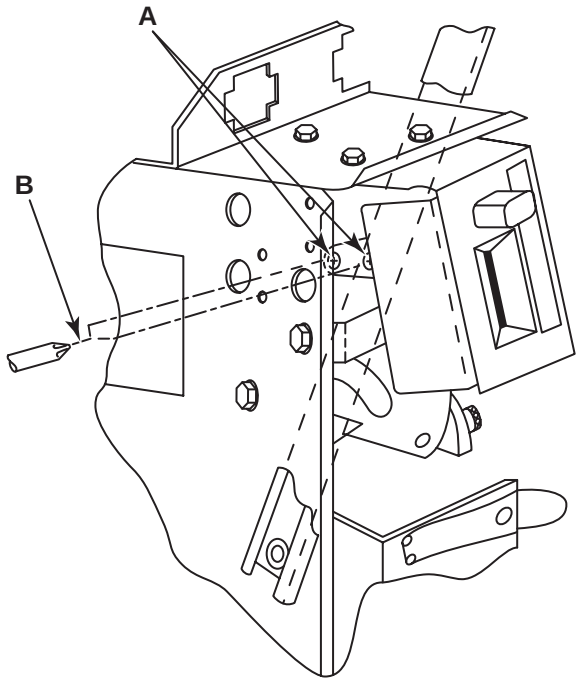

Figure 3-8. Bill Return Switch Adjustment

Hopper Chain Adjustment

NOTE:

Make sure the hopper is empty of all coins before you adjust the chain tension.

1. Loosen the three screws at the top back of the hopper, which will allow the black plastic upper chain guide ring to move diagonally upwards, as shown in *Figure 3-9*.
2. Pull the upper chain guide ring up as shown in *Figure 3-9,* while you rotate the drive pin clockwise until the slack is removed from the chain but no binding is evident.

3. Tighten the three screws making sure the lower screw is tightened last. If a torque wrench is available, adjust the chain so that the torque input at the drive pin is one to four inch pounds.

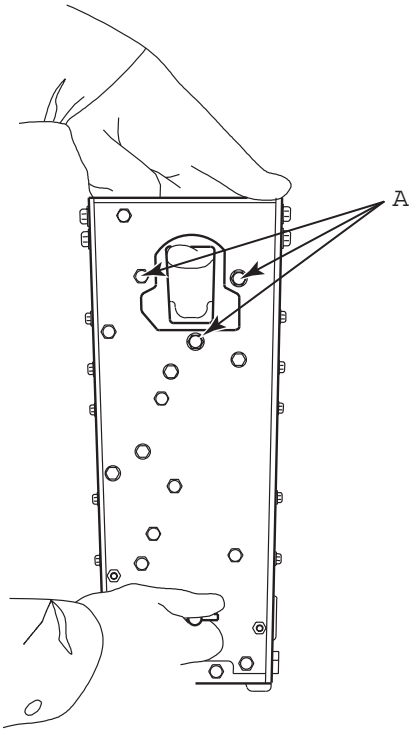

Figure 3-9. Hopper Chain Adjustment

Adjusting the Bill Acceptor Rails

The bill acceptor mounting rails must be spaced correctly as shown in *Figure 3-10A*. The bill acceptor should slide in and out without binding, but not be sloppy in the rails.

1. Adjust the rail spacing by loosening the two screws *(A)* which hold the right-hand rail and move the rail *(B)* sideways.

2. Retighten the screws.

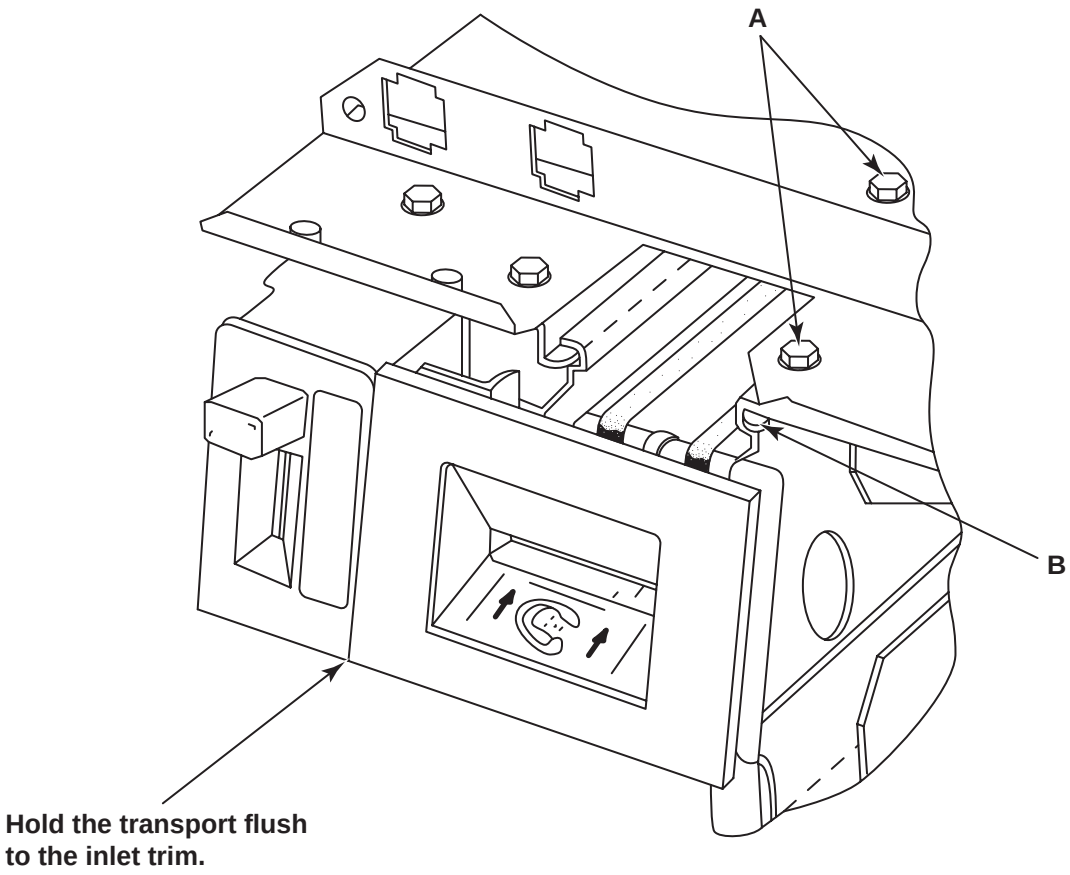

Figure 3-10A. Bill Acceptor Rail Adjustment

Adjusting the Bill Transport To Stacker Alignment

After adjusting the *Coin Inlet To Top Door Clearance* as described earlier in this section, loosen the two screws as shown in *Figure 3-10B*. With the bill acceptor flush with the coin inlet trim, pull the bill stacker as far forward as possible. After tightening the screws, make sure that the rear of the transport side plates and the bill acceptor stop plate on the stacker are flush to within 1/32 inch as shown in *Figure 3-10B*.

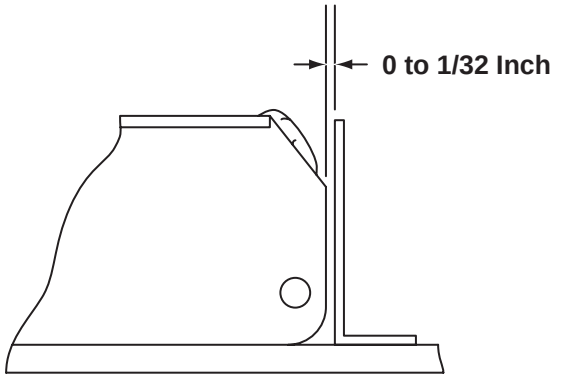

Figure 3-10B. Bill Transport to Stacker Alignment

Bill Stacker

HOME SWITCH ADJUSTMENT

A stacker cycle will start each time a TEST switch is pressed. Adjust the stacker HOME switch as follows:

1. Turn the power OFF and remove the bill stacker from the bill changer.
2. Hold the motor brake IN (disengaged) and manually rotate the motor shaft until the stacker is in the HOME position (the stacker push plate is at its inner most position).
3. Disconnect the lower link and move it to the side.
4. Adjust the cam switch by loosening the adjustment screw and rotating the switch until the cam pushes the spring against the switch body as shown in *Figure 3-11*.
5. Tighten the adjustment screw, reconnect the lower link and install the bill stacker in the bill changer.
6. Turn the power ON and check stacker operation.

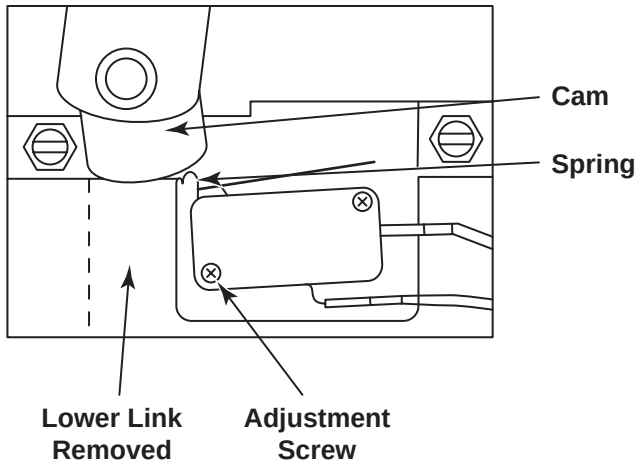

Figure 3-11. Stacker Switch Adjustment

Adjusting the Stacker Pusher Plate

1. Turn the power OFF and remove the stacker from the changer.
2. Loosen the four mounting screws holding the motor plate as shown in *Figure 3-12*.
3. Hold the motor brake IN (disengaged) and manually rotate the motor shaft until the cam activates the stacker switch.
4. Lay the bill stacker on its side with motor on top. Turn the motor shaft until the pusher plate is all the way back.
5. Move the pusher plate out by prying on the top end of the pusher plate with a small screw driver until it is approximately 1/8 inch past the hole in the top support plate as shown in *Figure 3-12*.
6. Tighten the four motor mounting screws and install the stacker in the bill changer.
7. Turn the power ON and check stacker operation.

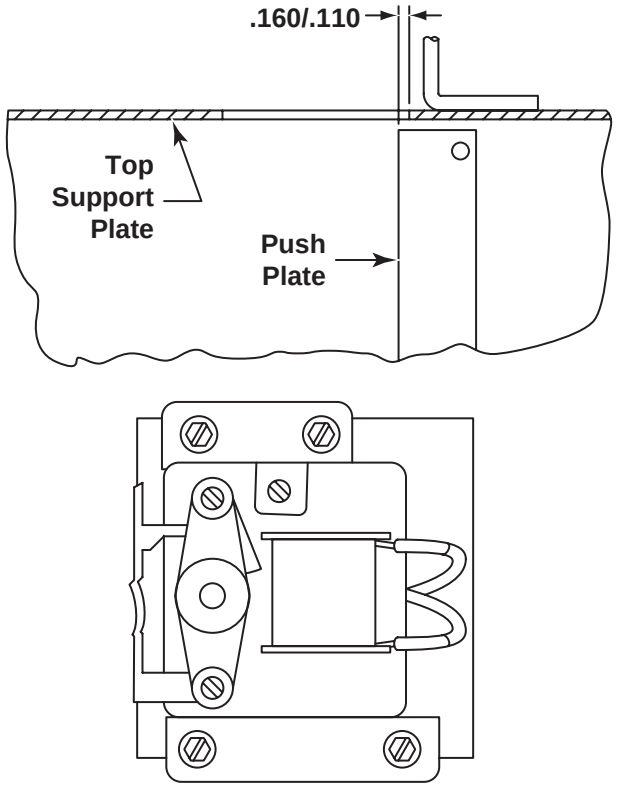

Figure 3-12. Pusher Plate Adjustment

Adjusting the Upper Bill Box

Refer to *Figure 3-13* as you do the following four steps.

1. Make sure that the upper bill box *(C)* is tight against chute guides *(A)*. If it is not, do the following procedure:

2. Loosen the two #8-32 screws *(B)* on each of the two support brackets *(D)*. Push the upper bill box *(C)* tight against chute guides.

3. Push the support brackets until the bill box catch wire *(E)* is horizontal and tight against the bill box.

4. Tighten the four #8-32 screws (the bill box catch wire must fall over the bill box, and the bill box must not move during stacking cycle.

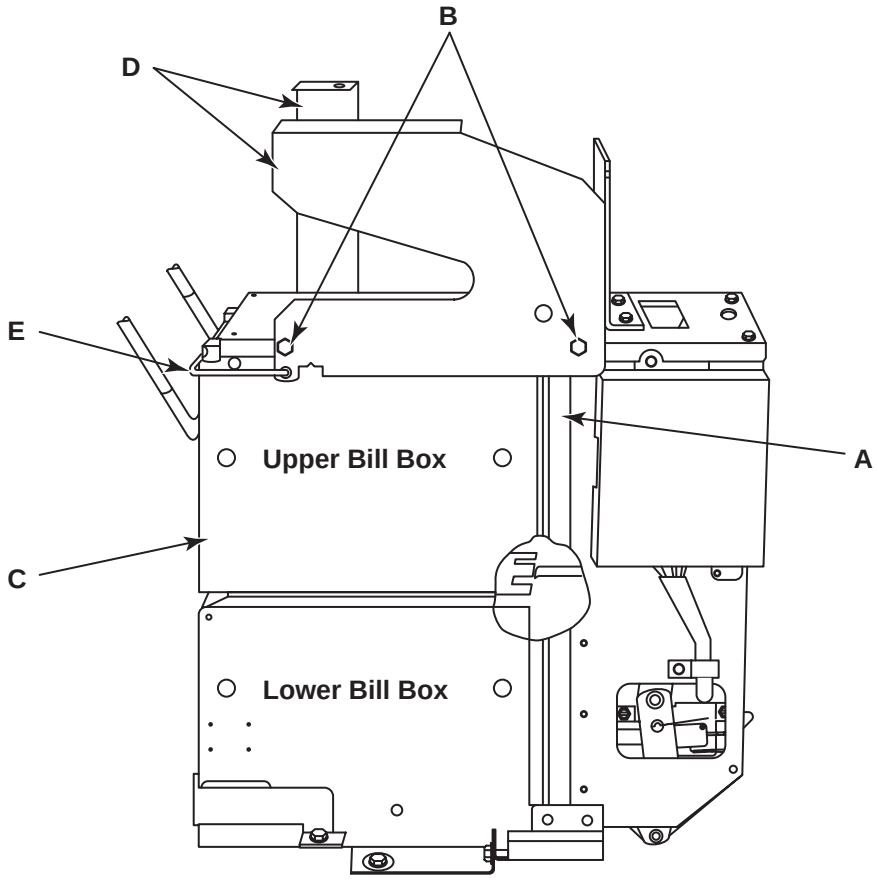

Figure 3-13. Upper Bill Box Adjustment

Bill Stop Flipper Check

Refer to *Figure 3-14* as an aid in doing this service check.

1. The bill stop flipper *(A)* must touch the tab *(B)* on the upper bill box.

2. With the lower bill box removed, slide the upper bill box into the stacker. The flipper should move downward approximately 1/32 to 1/16 inch when the upper bill box is inserted completely into the stacker.

3. If the flipper does not move downward the correct distance (1/32 to 1/16 inch), perform the following procedure:

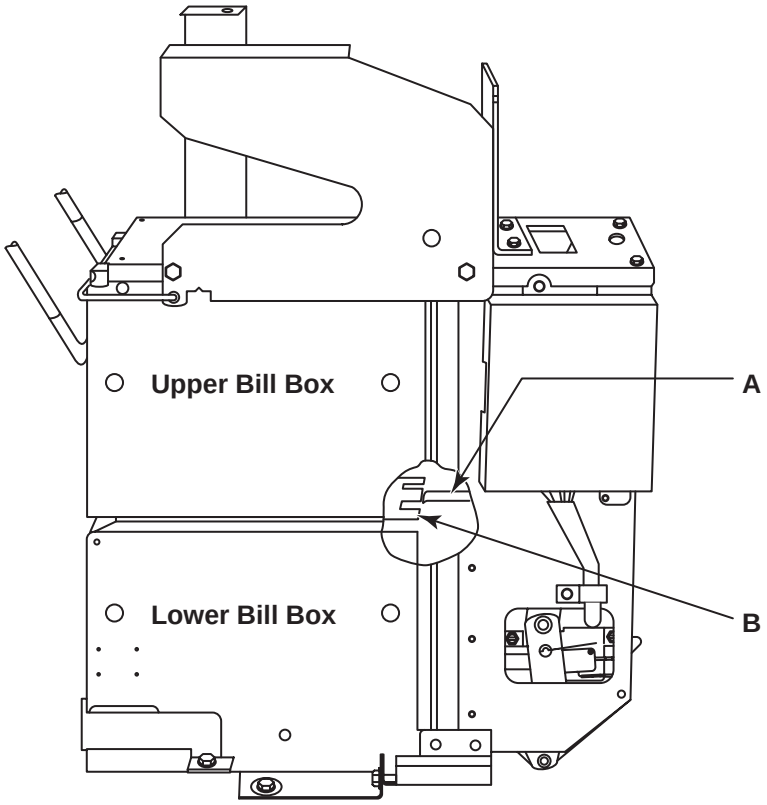

Figure 3-14. Bill Stop Flipper Check

Adjusting the Bill Stop Flipper

Refer to *Figure 3-15* while you are doing this procedure.

1. The position of the bill stop flipper *(A),* can be adjusted by prying against the solenoid plunger stop tab *(B)* through the flipper opening in the pusher plate with a screwdriver (Service tip: Pry up on the stop tab *(B)* to lower the flipper; pry down on the stop tab to raise the flipper).

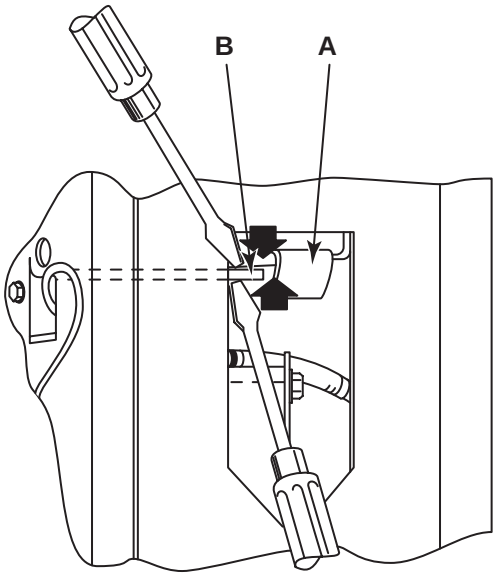

Figure 3-15. Bill Stop Flipper Adjustment

Installing a New or Replacement Bill Stacker

1. Slide the bill stacker and bill acceptor into the mounting rails and align them according to the preceding procedure called *"Adjusting the Bill Acceptor Rails"*.

Refer to *Figure 3-16* and adjust the lower bill box stop bracket and mounting plate so that the bottom bill box is aligned with the upper bill box and chute guides in the following manner:

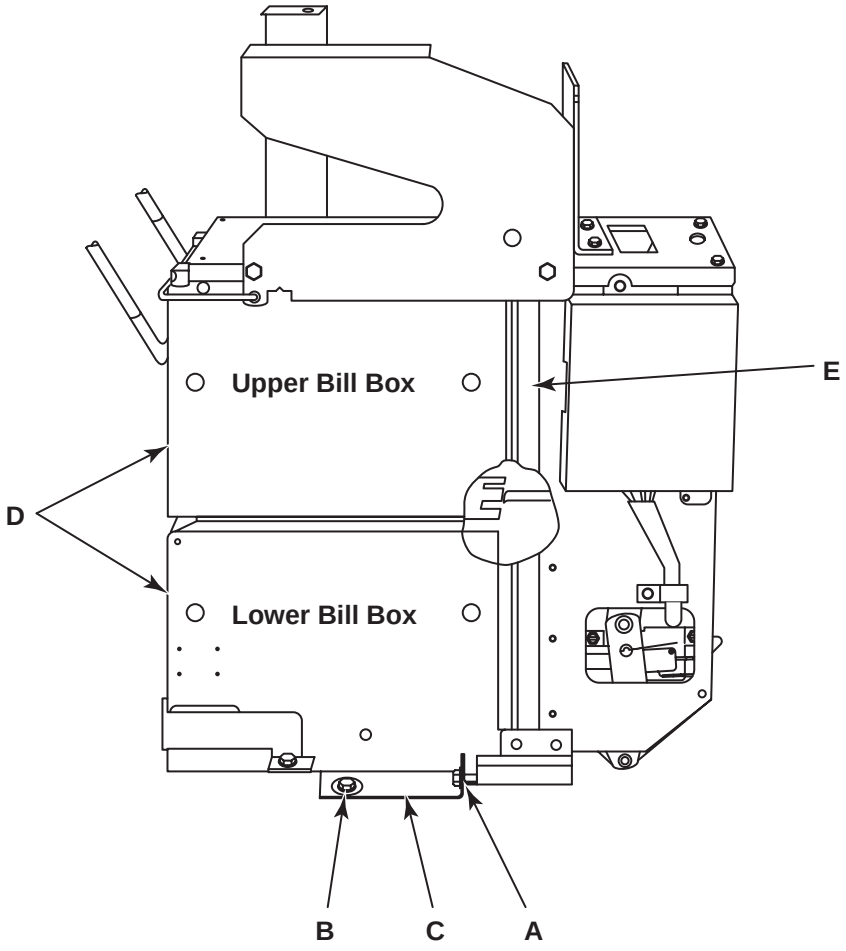

Figure 3-16. Mounting Plate Adjustment

2. Adjust the lower bill box stop bracket and mounting plate so that the bottom bill box is aligned with the upper bill box and chute guides by:

   A. Loosen the two 8-32 screws *(A)* holding the mounting plate *(C)* to the stacker.

   B. Loosen the two screws *(B)* holding the mounting plate to the cabinet.

   C. Move the mounting plate around until proper alignment is obtained.

   D. Tighten all four screws.

3. Refer to *Figure 3-16* and make sure that the bill boxes are tight against the chute guides *(A)* to get proper stacking.

4. Refer to *Figure 3-17* and loosen the two #8-32 screws *(A)* in the lower bill box stop bracket *(D)*. Push the lower box tight against the chute guides. Push the lower bill box stop bracket tight against the bill box and tighten the two #8-32 screws.

5. Check that the spring wire *(B)* on the top door is properly positioned by leaving the upper bill box unlatched (let the bill box stick out approximately 2½ inches).

6. Slowly close the top door and verify that the spring wire pushes the upper bill box into the latched position *(see Figure 3-17)*.

7. If the upper bill box does not push into the latched position, bend the spring wire out far enough to ensure that the spring wire pushes the upper bill box in far enough to allow the bail wire *(C)* to fall and latch the bill box in place when the door is closed.

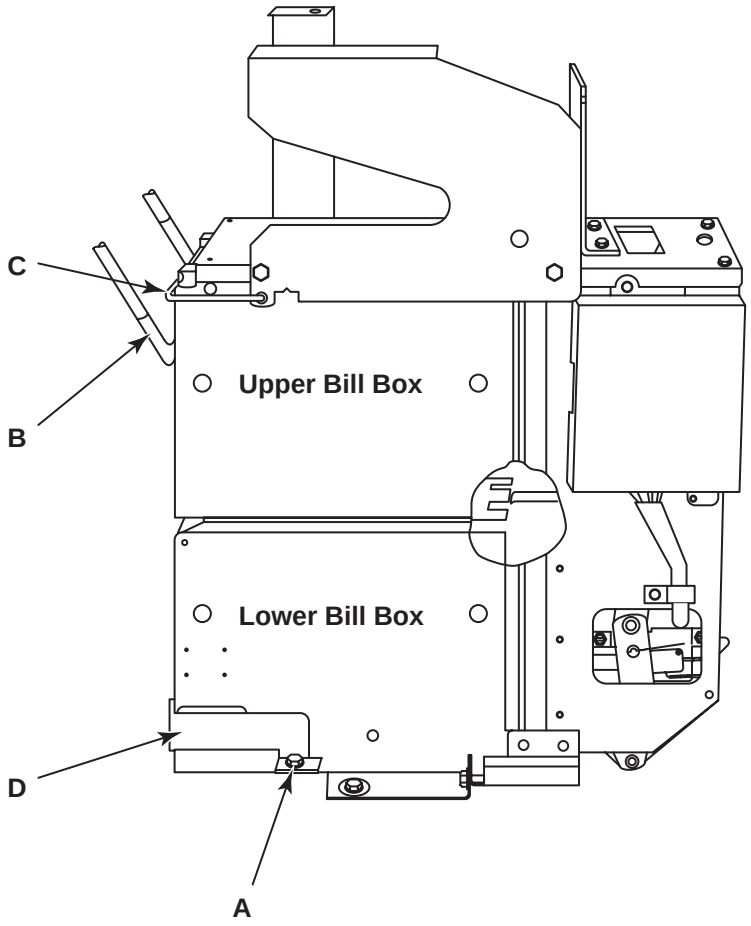

Figure 3-17. Lower Bill Box Stop Bracket Adjustment

Timing Belt Tension

Refer to *Figure 3-18* for this adjustment procedure.

1. Loosen the two screws *(A)* holding the belt tension adjustment levers *(B)* on both sides of the bill acceptor transport.

2. Make sure that the adjustment levers, adjusting roller, and shaft move freely.

3. Each belt should be adjusted such that it is as loose as possible, but tight enough that it will not "jump" the drive pulleys when the transport is under a heavy load such as reversing a badly wrinkled bill. If a more precise adjustment is desired, perform the following step:

   A. Apply 75 grams of perpendicular force to both belt tension adjustment levers at the same time and then tighten all four screws.

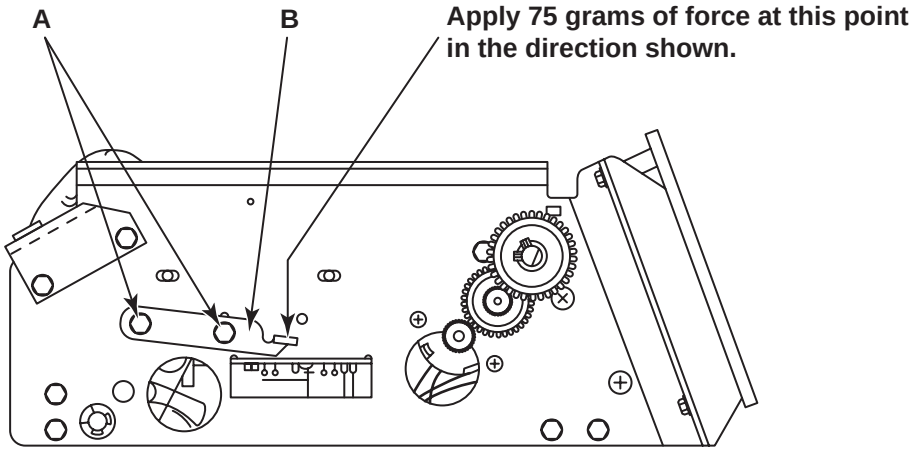

Figure 3-18. Timing Belt Tension Adjustment

Section 4: Troubleshooting

INTRODUCTION

The BC-3500 incorporates major assemblies and components as field replaceable plug-in units. There are several onboard diagnostic indicators on these assemblies. The information in this section takes full advantage of this design by isolating possible malfunctions to one or more of these basic plug-in units. This method saves time and requires little training in electronics.

The most significant troubleshooting aids for the BC-3500 are the power control center LED's, and the status display on the computer control center.

POWER UP DIAGNOSTICS

As power is applied to the BC-3500, a series of power up checks are performed by the control computer before the machine is put into service. The 16-character alphanumeric status display on the control computer is the primary diagnostic indicator. A secondary indicator is provided by the green reflective/transmissive LED in the bill transport.

The following sequence describes the power up sequence along with what is shown on the status display. The condition of the secondary indicator is also described.

Action - Turn the Power Switch to the ON position.

Sequence	Status Display	Transport LED
1	Display shows "ROWE FAST PAY"	LED flickers ON briefly
2	Display shows "VERSION XX"	LED OFF
3	Display shows "CHECKSUM=XXXX"	LED turns ON for about ½ second then turns OFF
4	Display shows "RAM TEST PASSED"	LED turns ON for about ½ second then turns OFF
5	Display shows "CHECKING SYSTEM"	LED ON
6	Display shows "SYSTEM CHECK OK"	LED ON
7	Display clears then a walking dash appears	LED OFF

Sequence Descriptions

1. During sequences 1 and 2 the control computer is performing internal tests on itself. Several things may indicate trouble. If the LED in the transport comes ON and stays ON and the display stays blank, there is a problem with the microprocessor on the control computer board. If the LED in the transport continues with the power up sequence but the status display stays blank, there is a problem with the display and it associated circuits on the computer control board.

   The XX on the display represents a software version number that will be displayed there.

   Example: Version 1.0 software will be displayed as VERSION 10. The version number displayed will match the version number visible through the hole in the lower left corner of the control computer assembly.

2. During sequence 3, the control computer is checking the integrity of its own program.

3. During sequence 4, the control computer is testing the Random Access Memory (RAM). If the RAM test does not pass, the message on the status display will say "RAM TEST FAILED". The machine will not continue the power up sequence and the LED in the transport will remain ON.

4. During sequences 5 and 6, the control computer is checking the machine configuration. If the configuration is the same as when the machine was turned OFF, it will go to normal standby operation. If the machine code does not match (a CCC board from a BC-1200 installed in a BC-3500), the display will show "MACHINE CODE ERR". If the configuration changed due to low battery voltage or some other reason effecting the RAM, the display will show "SET UP REQUIRED". In either case, the machine will require reprogramming.

5. Sequence 7 is the stand by condition. A dash walks back and forth across the status display and the LED in the transport is ON.

MACHINE STATUS

The status of the machine is shown on the status display of the CCC during all phases of operation. The following section will describe the status messages displayed.

Standby Mode

The STANDBY mode is the normal, waiting to accept money, mode. All four voltage LED's on the power control center are lit. All three LED's on the dispenser are lit. Then the inlet LED (VI) in the transport is lit. There is a dash walking back and forth across the display. All motors and bucket solenoids are OFF. The transport motor is OFF. The coin lockout solenoid is either on or off depending on whether coins are enabled or not. The out of service lamp is off.

In the STANDBY mode, the HOPPER and VALUE buttons on the CCC have special functions. When the VALUE button is pressed, the status display will show "AMOUNT $XX-XX", where XX-XX is the amount of money that has been accepted since this amount was last cleared. When the HOPPER button is pressed, the status display will show "LAST XXX XXX XXX", where the XXX indicates the last three denominations paid out. The denomination on the left is the most recent, the denomination in the center paid before the one on the left and the denomination on the right paid before the center denomination.

Accept, Payout, and Replenish Modes

During normal operation, the display will reflect each state the machine goes through as it happens. When a bill is moving in the transport, the message "VALIDATING" will appear. After validation, during the stack and vend cycles, the display will show the message "XX PAYS - - -". The XX indicates the denomination just accepted and the -'s represent the number of coins from the left, center and right hoppers needed to refill the bucket. During replenish, as coins pass through the detectors, the displayed coin counts will be reduced until all three reach zero. The machine will then return to the STANDBY mode.

Reject Mode

While the machine is validating a bill, several things may cause the bill to be rejected. When a bill is rejected, the transport will reverse returning the bill and the status display will show a reason for the reject. This reject message will stay on the display for about thirty seconds, then the walking dash will erase it.

Out of Service Mode

If a condition exists that will prevent proper operation, the changer will enter the OUT OF SERVICE (or SHUTDOWN) mode. The most common cause of this condition is that the changer is out of coins or tokens, but other malfunctions will lead to this state.

When the control computer detects such a condition, it immediately de-energizes the power control relay and coin lockout solenoid. This causes the 120VAC, 40VDC, and 30VDC to be switched off to all components and the OUT OF SERVICE lamp to come on. The display will begin to flash an error message.

The next pages will provide explanations of and troubleshooting hints for all of the reject and shutdown messages.

Index to Error Messages and Troubleshooting Charts

+5 VDC Failure, +5 VDC LED Out[1] 4-63

Bill Changer Gives Erratic Payout for Bills and Coins[1]
(No Error Messages) 4-61

Bill Changer Steals Bills[1]
(Works OK With Coins) 4-59

Bill Changer Steals Bills and Coins[1]
(Gives No Change) 4-60

Bill Changer Steals Coins[1]
(Works OK with Bills) 4-58

Bill Stacker Problems[1] 4-62

Bill Transport Fails to Run in One or Both Directions[1]
(Works OK for Coins and Test Switches) 4-57

BUCKET NOT OPEN 4-52

BUCKET PWR FLT 4-50

BUCKET STAYS ON 4-54

CANNOT PAYOUT VALUE 4-38

C DETCTR ON LONG 4-35

C HOPPER EMPTY 4-44

CK 25 COIN SWTCH 4-26

CK 50 COIN SWTCH 4-27

CK BILL RETRN SW 4-29

CK C COIN DETCTR 4-30

CK COIN DETECTORS 4-32

CK COIN SWITCHES 4-27

CK CTR TEST SW 4-23

CK L COIN DETCTR 4-29

CK LEFT TEST SW 4-22

CK R COIN DETCTR 4-31

CK RIGHT TEST SW 4-23

CK STACKER 4-48

CK STACKER NL 4-48

CK TEST SWITCHES 4-24

CK TRANSPORT MAG 4-20

CK TRANSPORT VF 4-21

CK TRANSPORT VI 4-20

CK TRANSPORT VR 4-21

CK TRANSPORT VT 4-21

DETCTRS ON LONG 4-37

[1] These conditions are not shown as a message on the display.

ERROR ?? 4-38
EXTRA COIN - C HOP 4-40
EXTRA COIN - L HOP 4-40
EXTRA COIN - R HOP 4-41
HOPPERS EMPTY 4-46
L DETCTR ON LONG 4-34
L HOPPER EMPTY 4-43
One or More Hopper Motors Fail to Run[1] 4-56
R DETCTR ON LONG 4-36
R HOPPER EMPTY 4-45
REJECT - ACCPT OFF 4-19
REJECT - BILL (A) 4-16
REJECT - BILL (B) 4-16
REJECT - BILL (C) 4-16
REJECT - BILL (D) 4-17
REJECT - BILL (E) 4-17
REJECT - BILL (F) 4-17
REJECT - BILL (G) 4-17
REJECT - BILL (H) 4-18
REJECT - BILL (I, J, K, M, S) 4-18
REJECT - BILL (L) 4-18
REJECT - BILL (P) 4-18
REJECT - FAST FEED 4-19
REJECT - LATE VF 4-13
REJECT - LONG VF 4-10
REJECT - LONG VI 4-10
REJECT - LOST TACH 4-15
REJECT - NO DENOM 4-19
REJECT - NO MAG 4-12
REJECT - RETURN SW 4-19
REJECT - SHORT VF 4-7
REJECT - SHORT VI 4-6
REJECT - SPEED 4-14
REJECT - TIMEOUT 4-9
REJECT - VF OPEN 4-15
REJECT - VI AGAIN 4-8
REJECT - VT AGAIN 4-11

VALIDATION REJECTS

Cell Sequence Rejects

REJECT - SHORT VI

Symptom:

The inlet cell was covered for too short of a time.

This is a reject message.

The bill was rejected because the VI cell was not covered long enough. The bill may have been torn on the right side, torn, or folded over at the trailing edge of the bill. If bills are rejected frequently with this code, the VI cell may be giving an intermittent signal.

Corrective Action:

1. Check the VI cell for proper switching.

2. If the cell is OK, check the wiring from the VI cell to the CCC for a possible short to the chassis, or an open to the CCC (P4 - Pin 14).

3. The +5 VDC supply to the LEDs may be below 4.5 VDC; check the voltage. If it is low, replace regulator VR802 on the power control center *(see the components list for the power supply circuit board)*.

4. If all of preceding checks are OK, replace the CCC.

If the bill is left in the transport for five seconds, the machine will go into SELF-CLEAR.

REJECT - SHORT VF

Symptom:

Flipper cell covered for too short a time.

This is a reject message.

The bill was rejected because the flipper cell was uncovered too soon and the CCC recognized this as a non-valid validation sequence. If bills are rejected frequently with this message:

Corrective Action:

1. Check for small pieces of paper or other foreign objects in the track.

2. The flipper may be binding or hanging-up on the back rollers. Check for flash or burrs on the flipper and back rollers.

3. The flipper cell may be giving an intermittent signal. Check the cell for proper switching. If the cell is OK, check the wiring from the transport to the CCC for a possible ground to the chassis or an open to the CCC (P4 - Pin 7).

4. If all of the preceding checks are OK, replace the CCC.

If the bill is left in the transport for five seconds, the machine will go into SELF-CLEAR.

REJECT - VI AGAIN

Symptom:

A second bill was inserted while validating the first bill.

This is a reject message.

A bill was rejected because the VI cell was covered while the changer was in the process of validating a bill.

Wait until the changer completes the cycle before you insert the next bill.

If bills are rejected frequently with this code, the VI cell may be giving an intermittent signal.

Corrective Action:

1. Check the VI cell for proper switching. If the cell is OK, check the wiring from the VI cell to the CCC (P4 - Pin 14) for an intermittent open connection.

2. If both of the preceding checks are OK, replace the CCC.

If the bill is left in the transport for five seconds, the bill changer will go into SELF-CLEAR.

REJECT - TIMEOUT

Symptom:

Inlet cell was never uncovered.

This is a reject message.

The bill was rejected because the VI cell never uncovered. The CCC recognized this as a non-valid validation sequence. Take the following corrective action if bills are rejected frequently with this code.

Corrective Action:

1. Check for small pieces of paper or other foreign objects in the track.
2. The VI cell may be giving an intermittent signal. Check the VI cell for proper switching.
3. If the cell is OK, check the wiring from the VI cell to the CCC (P4 - Pin 14) for a possible short to the chassis.
4. The +5VDC supply to the LEDs may be low; check the voltage. If it is low, replace the VR801 regulator on the power supply board, which is inside the power control center.
5. If all of the preceding checks are OK, replace the CCC.

If a bill is left in the transport for five seconds, the bill changer will go into SELF-CLEAR.

REJECT - LONG VI

Symptom:

The inlet cell was covered for too long a time.

This is a reject message.

The bill was rejected because the VF cell was covered too soon, or the VI cell was covered too long.

The CCC recognized this as a non-valid validation sequence.

If bills are rejected frequently with this code, take the following corrective action:

Corrective Action:

1. Check for small pieces of paper or other foreign objects in the track.
2. The VF flipper may be binding or hanging-up on back rollers.
3. Check for flash or burrs on flipper and back rollers.
4. The VF or VI cell may be giving an intermittent signal. Check the cells for proper switching. If the cells are OK, check the wiring from the VF cell to the CCC (P4 - Pin 7) for a possible ground to the chassis and VI cell to the CCC (P4 - Pin 16).
5. If all of previous checks are OK, replace the CCC.

If a bill is left in the transport for five seconds, the bill changer will go into SELF-CLEAR.

REJECT - LONG VF

Symptom:

The flipper cell was blocked for too long a time.

This is a reject message.

The bill was rejected because the VF cell was covered too long.

If this message appears often with good bills, check for tight VF flipper operation, incorrect transport to stacker alignment, or a nonoperating stacker.

If a bill is left in the transport for five seconds, the bill changer will go into SELF-CLEAR.

REJECT - VT AGAIN

Symptom:

The transmissive cell was covered.

This is a reject message.

A bill was rejected because the VT cell recovered while the bill changer was in the process of validating a bill.

If bills are rejected frequently with this message, check for a piece of paper or other material in the transport.

The VT cell may be giving an intermittent signal.

Corrective Action:

1. Check the VT cell for proper switching. If the cell is OK, check the wiring from the VT cell to the CCC (P4 - Pin 10) for an intermittent open connection.

2. If all of the preceding checks are OK, replace the CCC.

If the bill is left in the transport for more than five seconds, the bill changer will go into SELF-CLEAR.

REJECT - NO MAG

Symptom:

Not enough magnetic signal from the Mag. Amp.

This is a reject message.

The bill was rejected because no signals came from the Mag. Amp.

The bill may have been inserted upside down.

If bills are frequently rejected for this message:

Corrective Action:

1. Check for intermittent connections in the Mag. Amp. harness or the White/Brown, White/Green wires from the transport to the CCC (P4 - Pins 2 and 5).

2. Check the bill pressure rollers in the transport for proper spring pressure.

3. Check the surface of the Mag. head for dirt buildup or foreign material.

4. If all of the preceding checks are OK, replace the Mag. Amp.

5. If the problem still exists, replace the CCC.

If a bill is left in the transport for five seconds, the bill changer will go into SELF-CLEAR.

REJECT - LATE VF

Symptom:

The flipper cell did not cover.

This is a reject message.

The bill was rejected because the VF cell was not covered soon enough after the VT cell was covered.

The bill is possibly torn at its leading edge.

An object is possibly hung-up or jammed in the track.

If bills are frequently rejected with this message:

Corrective Action:

1. Check for tight, binding, or sticky flipper operation.
2. Check for an intermittent open circuit in the wiring to the VF cell from the CCC (P4 - Pin 7).
3. Check the rear portion of the transport track for any condition that would cause a bill to slow down or hang up (soft drink residue, catsup, burrs in the track, etc.).
4. The drive belts of the transport may be broken or slipping. Check them and replace the drive belts if necessary.
5. If none of the preceding steps find the problem, replace the CCC.

If a bill is left in the transport for five seconds, the bill changer will go into SELF-CLEAR.

REJECT - SPEED

Symptom:

The transport motor speed is not correct.

This is a reject message.

The bill was rejected because the transport motor did not run at a constant speed during validation.

Corrective Action:

1. An object is possibly hung-up or jammed in the track.
2. If bills are frequently rejected for this message, check for tight, binding, or sticky rollers, belts, or flipper.
3. Check that the timing belt tension is not too tight.
4. Check that the +12 VDC supply in the power control center is correct.
5. Check for an intermittent connection in the wiring for the +12 VDC supply, the Red, Black, and Shield wires, or the White/Black encoder signal wire.
6. Check the motor and timing gear backlash.
7. If all of the preceding checks are OK, replace the transport.
8. If the problem still exists, replace the CCC.
9. Replace the power control center if replacing the CCC does not correct the problem.

If a bill is left in the transport for more than five seconds, the bill changer will go into SELF-CLEAR.

REJECT - LOST TACH

Symptom:

The tach signal from the transport was lost.

This is a reject message.

The bill was rejected because the CCC cannot control the transport motor speed without a tach. signal.

Corrective Action:

1. An object is possibly hung-up or jammed in the track.
2. Check for a tach. signal as outlined in *Test Procedures* in *Section 3.* Replace the transport if the tach. is bad.
3. Check for intermittent connections in the wiring from the transport to the CCC (P4 - Pin 9).
4. If all of the preceding checks are OK, replace the CCC.

REJECT - VF OPEN

Symptom:

The flipper cell opened too soon.

This is a reject message.

The bill was rejected because the VF cell opened during validation.

The bill is possibly torn, or it may have a hole in it.

An object is possibly hung-up or jammed in the track near the flipper.

If bills are frequently rejected for this message, take the following corrective action:

Corrective Action:

1. Check for tight, binding, or sticky flipper operation.
2. Check for an intermittent open circuit in the wiring to the VF cell from CCC (P4 - pin 7).
3. If the preceding checks do not find the problem, replace the CCC.

If a bill is left in the transport for five seconds, the bill changer will go into SELF-CLEAR.

BILL PARAMETER REJECTS

Take corrective action only if all bills or a significant number of bills reject for the same reason. Be sure to try different bills and bills of different denominations. If they accept, the bill being rejected has some property the CCC finds abnormal.

REJECT - BILL (A)

Symptom:

The bill failed validation because of a lack of a magnetic signal.

Corrective Action:

1. Replace the Mag. amp/transport
2. Replace the CCC.

REJECT - BILL (B)

Symptom:

The bill failed validation.

Corrective Action:

1. Replace the Mag. amp/transport
2. Check/clean the two bill pressure rollers under the magnetic head(s) - (may have metal particle contamination).
3. Replace the CCC.

REJECT - BILL (C)

Symptom:

The bill failed validation.

Corrective Action:

1. Replace the Mag. amp/transport
2. Check for good spring tension on the two bill pressure rollers under the magnetic head(s).
3. Replace the CCC.

REJECT - BILL (D)

Symptom:

The bill failed validation.

Corrective Action:

1. Replace the Mag. amp/transport
2. Replace the CCC.

REJECT - BILL (E)

Symptom:

The bill failed validation.

Corrective Action:

1. Check the VR/VT cells for proper voltages and switching *(refer to Section 3)*.
2. Replace the VR cell, VT cell, VR/VT LED or transport.
3. Replace the CCC.

REJECT - BILL (F)

Symptom:

The bill failed validation because there is far too much magnetic signal. Refer to REJECT - BILL (B).

REJECT - BILL (G)

Symptom:

The bill failed validation.

Corrective Action:

1. Check the VR/VT cells for proper voltages and switching *(refer to Section 3)*.
2. Replace the VR cell, VT cell, VR/VT LED or transport.
3. Replace the CCC.

REJECT - BILL (H)

Symptom:

The bill failed validation because the information from Mag Head 2 was incorrect.

Corrective Action:

1. Check the White/Green wire from the transport for an Open/Short to the CCC (P4 - Pin 5).
2. Replace the mag amp/transport.
3. Replace the CCC.

REJECT - BILL (I, J, K, M, or S)

Symptom:

Bills rejected with any of these codes are failing a number of interrelated magnetic tests.

Corrective Action:

1. Replace the transport
2. Replace the CCC.

REJECT - BILL (L)

Symptom:

The bill failed validation because there was insufficient mag signal from certain points on the bill.

Corrective Action:

1. Replace the transport
2. Replace the CCC.

REJECT - BILL (P)

Symptom:

The bill failed validation due to incorrect mag information from either mag head.

1. Replace the Mag. amp/transport
2. Replace the CCC.

REJECT - NO DENOM

Symptom:

Bills are rejected with this code when the validation tests cannot accurately determine the bill's denomination.

Corrective Action:

1. Replace the transport.
2. Replace the CCC.

REJECT - FAST FEED

Symptom:

The bill is being rejected because its acceptance would exceed the limits established for the Fast-Feed Shutdown feature. *(See Section 2.)* The changer will enter the Fast-Feed Shutdown mode as soon as the bill is cleared from the transport.

REJECT - RETURN SW

Symptom:

The bill return switch was pushed during validation.

Corrective Action:

1. Do not push BILL RETURN switch during validation. Check for loose or shorted wires or a shorted switch.
2. If the switch and wires are OK, replace the CCC.

REJECT - ACCPT OFF

Symptom:

Bill denomination payout was not turned ON.

Corrective Action:

Set the bill changer to accept the rejected denomination.

Transport Errors

Transport errors are considered to be recoverable errors. That is, if the source of the error goes away, the machine will return to the normal STANDBY mode all by itself. Transport errors are shown on the status display while they are present. Occasionally after resetting a shutdown error or on power up, a transport error will briefly appear. This is normal and should not be a concern. A list of transport errors follows with an explanation for each and hints on where to look for trouble.

CLEARING ERRORS

Transport errors are self-clearing. When the trouble has been repaired, the error will go away on its own.

Bill changer errors are stored in the CCC and must be cleared. To clear an error displayed on the readout, push the FUNCTION button on the CCC while the CCC is in the NORMAL mode. If the situation that caused the error is repaired, the error will be cleared. Multiple errors will be stored in the CCC. Press the FUNCTION button to clear each error as it is displayed on the CCC readout (referred to as the "display"). When all errors are cleared, the changer will return to STANDBY.

CK TRANSPORT MAG

Symptom:

The Mag. amp output idle voltage is not within limits (0.24 to 1.60 volts).

Corrective Action:

1. Check the wires and connectors in the Mag. amp and transport harness.
2. Replace the Mag. amp circuit board.
3. Replace the transport.
4. Replace the CCC.

CK TRANSPORT VI

Symptom:

The transport inlet cell voltage is not within limits (0 to 4.10 volts).

Corrective Action:

1. Check the Yellow wire and connectors in the transport harness for an open/short back to the CCC P4 pin 14.
2. Check the VI cell for proper voltage and switching *(refer to Section 3)*.
3. Replace the inlet cell.
4. Replace the transport.
5. Replace the CCC.

CK TRANSPORT VF

Symptom:

The transport flipper cell voltage is not within limits (0 to 2.00 volts).

Corrective Action:

1. Check the Brown wire and connectors in the transport harness for an open/short back to the CCC (P4 Pin 7).
2. Check the VF cell for proper voltages and switching *(refer to Section 3)*.
3. Replace the transport interconnect board.
4. Replace the transport.
5. Replace the CCC.

CK TRANSPORT VT

Symptom:

The transport transmissive cell voltage cannot be adjusted into the range of from 0.50 to 3.60 volts DC.

Corrective Action:

1. Check the White wire and connectors in the transport for an open/short back to the CCC (P4 Pin 10).
2. Clean the transmissive cell and the LED below it.
3. Replace the transport transmissive cell and/or the transmissive/reflective LED.
4. Replace the transport.
5. Replace the CCC.

CK TRANSPORT VR

Symptom:

The transport reflective cell voltage is not within limits (0.20 to 4.90 volts).

Corrective Action:

1. Check the Orange wire and connectors in the transport harness for an open short back to the CCC (P4 Pin 13).
2. Clean the reflective cell and LED.
3. Replace the transport reflective cell and/or the transmissive/reflective LED.
4. Replace the transport.
5. Replace the CCC.

Machine Errors

There are two types of machine errors — SHUTDOWN and NON-SHUTDOWN. Shutdown errors are errors which could cause damage to the machine or incorrect payouts. NON-SHUTDOWN errors are errors involving coin switches, test switches and the bill return switch.

When a NON-SHUTDOWN error occurs, the switch or switches involved will be locked out of operation. Bill acceptance will not be affected. All machine errors are stored in the CCC and displayed on the status display during STANDBY. NON-SHUTDOWN errors are displayed steady without blinking. All SHUTDOWN errors are displayed as blinking messages with the out of service lamp lit. The CCC can remember up to five errors, however, there will never be more than one shutdown error, as this will cause the machine to go out of service. All faults or malfunctions that cause errors must be repaired and the errors cleared from the CCC before the machine can go back to service.

Clearing Machine Errors

Clearing machine errors is done by simply pushing the FUNCTION button while the error is displayed. As each error is cleared, any previous errors will be displayed on the CCC. Press the FUNCTION button to clear each error. After all errors are cleared and no faults or malfunctions are left in the machine, it will return to the STANDBY state.

Changer Errors (Non-Shutdown)

None of these errors cause the bill changer to shut down. While the bill changer is in STANDBY, the last error will remain on the display.

CK LEFT TEST SW

Symptom:

The left TEST switch was closed longer than three seconds.

Corrective Action:

The LEFT TEST switch input is (or was) showing an incorrect signal.

In order to prevent spurious payouts, the CCC immediately locks out all TEST switch inputs if it receives an incorrect signal from one of the TEST switches. Thereafter, the bill changer will still accept bills but will not respond to the TEST switches.

Press the FUNCTION button. If the message does not reappear, check the wiring to the TEST switches for intermittent short to Ground. If the wiring is OK, the problem may be an intermittent condition in the CCC.

For a more complete troubleshooting sequence, *refer to Troubleshooting Chart 010 at the end of the TEST SWITCH troubleshooting.*

CK CTR TEST SW

Symptom:

The center TEST switch was closed longer than three seconds.

Corrective Action:

The CENTER TEST switch input is (or was) showing an incorrect signal.

In order to prevent spurious payouts, the CCC immediately locks out all TEST switch inputs if it receives an incorrect signal from one of the TEST switches. Thereafter, the bill changer will still accept bills but will not respond to the TEST switches.

Press the FUNCTION button. If the message does not reappear, check the wiring to the TEST switches for intermittent short to Ground. If the wiring is OK, the problem may be an intermittent condition in the CCC.

For a more complete troubleshooting sequence, *refer to Troubleshooting Chart 010 at the end of the TEST SWITCH troubleshooting.*

CK RIGHT TEST SW

Symptom:

The right TEST switch was closed longer than three seconds.

Corrective Action:

The RIGHT TEST switch input is (or was) showing an incorrect signal.

In order to prevent spurious payouts, the CCC immediately locks out all TEST switch inputs if it receives an incorrect signal from one of the TEST switches. Thereafter, the bill changer will still accept bills but will not respond to the TEST switches.

Press the FUNCTION button. If the message does not reappear, check the wiring to the TEST switches for intermittent short to Ground. If the wiring is OK, the problem may be an intermittent condition in the CCC.

For a more complete troubleshooting sequence, refer to Troubleshooting Chart 010 at the end of the TEST SWITCH troubleshooting.

CK TEST SWITCHES

Symptom:

More than one TEST switch was closed at the same time.

Corrective Action:

More than one TEST switch input is (or was) showing an incorrect signal.

In order to prevent spurious payouts, the CCC immediately locks out all TEST switch inputs if it receives an incorrect signal from the TEST switches. Thereafter, the bill changer will still accept bills but will not respond to the TEST switches.

1. Press the FUNCTION button. If the message does not reappear, check the wiring to the TEST switches for intermittent short to Ground. If the wiring is OK, the problem may be an intermittent condition in the CCC.

2. If the message reappears after pressing the FUNCTION button, unplug P204 at the back of the power control center and try again. If this message reappears, replace the CCC. If it doesn't reappear, replace the power control center.

For a more complete troubleshooting sequence, refer to Troubleshooting Chart 010 at the end of this TEST SWITCH troubleshooting.

Chart 010 — No Test Switch Response

Display shows: **CK LEFT TEST SW** *– OR –* **CK CTR TEST SW** *– OR –* **CK RIGHT TEST SW** *– OR –* **CK TEST SWITCHES**

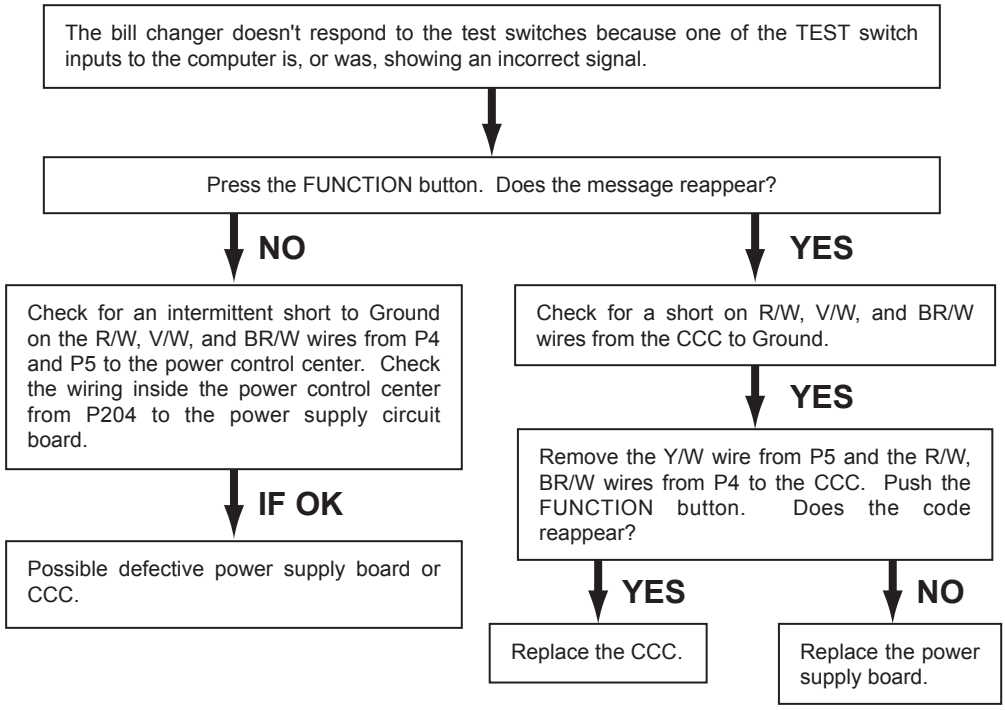

Changer Errors (Non-Shutdown)
(Continued)

COIN SWITCH ERRORS

CK 25 COIN SWTCH

Symptom:

The 25¢ coin switch was closed too long.

Corrective Action:

The 25¢ coin switch input is (or was) showing an incorrect signal.

In order to prevent spurious payouts, the CCC immediately locks out all coin switch inputs if it receives an incorrect signal from the coin switches. Thereafter, the bill changer will still accept bills, but it will no longer take coins.

1. Press the FUNCTION button. If this message does not reappear, check the wiring to the coin switch circuit for an intermittent short to Ground. If the wiring is OK, the problem may be in the CCC or coin switch circuit board.

2. If this message reappears after resetting, unplug the coin switch circuit board from the main harness and try again. If this message reappears, replace the CCC. If it doesn't, replace the coin switch circuit board.

For a more complete troubleshooting sequence, refer to Troubleshooting Chart 020 at the end of this COIN SWITCH troubleshooting.

CK 50 COIN SWTCH

Symptom:

The 50¢/$1.00 coin switch was closed too long.

Corrective Action:

The 50¢ coin switch input is (or was) showing an incorrect signal.

In order to prevent spurious payouts, the CCC immediately locks out all coin switch inputs if it receives an incorrect signal from the coin switches. Thereafter, the bill changer will still accept bills, but it will no longer take coins.

1. Press the FUNCTION button. If this message does not reappear, check the wiring to the coin switch circuit board for an intermittent short to Ground. If the wiring is OK, the problem may be in the CCC or coin switch circuit board.

2. If this message reappears after resetting, unplug the coin switch circuit board from the main harness and try again. If this message reappears, replace the CCC. If it doesn't, replace the coin switch circuit board.

For a more complete troubleshooting sequence, refer to Troubleshooting Chart 020 at the end of this COIN SWITCH troubleshooting.

CK COIN SWITCHES

Symptom:

Both coin switches closed at the same time.

Corrective Action:

Both of the coin switch inputs are (or were) showing an incorrect signal.

In order to prevent spurious payouts, the CCC immediately locks out all coin switch inputs if it receives an incorrect signal from the coin switches. Thereafter, the bill changer will still accept bills, but it will no longer take coins.

1. Press the FUNCTION button. If this message does not reappear, check the wiring to the coin switch circuit board for an intermittent short to Ground. If the wiring is OK, the problem may be in the CCC or coin switch circuit board.

2. If this message reappears after resetting, unplug the coin switch circuit board from the main harness and try again. If this message reappears, replace the CCC. If it doesn't, replace the coin switch circuit board.

For a more complete troubleshooting sequence, refer to Troubleshooting Chart 020 at the end of this COIN SWITCH troubleshooting.

Chart 020 - Bill Changer Doesn't Accept Coins - Works OK With Bills

Display shows: **CK 25 COIN SW** – *OR* – **CK 50/100 COIN SW** – *OR* – **CK COIN SWITCHES**

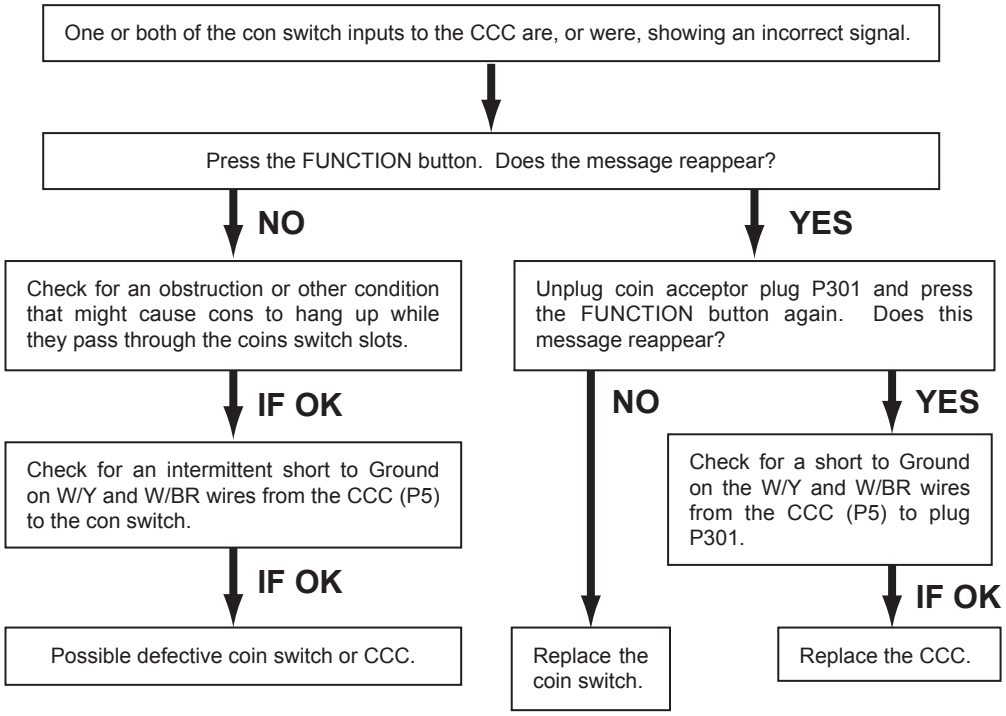

CK BILL RETRN SW

Symptom:

The bill return switch was closed longer than 10 seconds. This error will disable the bill return function. All other changer functions continue to operate.

Corrective Action:

1. Remove the bind or jam in the bill return linkage.
2. Check the R/G wire from the bill return to CCC (P5 Pin 9) for a short to ground.
3. Check the bill return switch. If it is defective, replace it. If it is not defective, replace the CCC.

Bill Changer Errors (Shutdown)

Only one of these errors will exist at a time. The display will flash the error code indicating a SHUTDOWN. One of these errors may also exist with up to three NON-SHUTDOWN errors.

COIN DETECTOR ERRORS WHILE IN THE STANDBY MODE

CK L COIN DETCTR

Symptom:

The left coin detector was blocked while the bill changer was in the STANDBY state. One of the buckets may have an incorrect change load.

Corrective Action:

The left coin photodetector input is, or was, giving an incorrect signal / or the left hopper may have been running in standby mode.

1. The left LED on the dispenser may have burned out. If the LED is still out, check the wiring to that LED. Check the LED and replace it if it is defective.

2. If all LEDs are not lit, check the +5 VDC LED on the power control center. If it is not lit, check the power supply. If it is lit, check +5V power distribution lines in the harness (Blue wires).

3. Press the FUNCTION button. If the message reappears, check for dirt on the left detector and LED. If they are clean, check the coin photodetector (per *Section 3*). If it is OK, check the wiring from the photodetector to the CCC for an open connection or short to Ground. If no problems are found, replace the CCC.

4. If this message does not reappear after resetting the bill changer, check the wiring to the hopper motors and coin detectors. If no problems are found, replace the CCC. To restore the bill changer to operation, press the FUNCTION button after correcting the problem.

NOTE:

This error code may be the result of a leaky output to the left hopper drive motor from the CCC. If this is the case, replace the CCC.

For a more complete troubleshooting sequence, refer to Troubleshooting Chart 030 at the end of this COIN DETECTOR troubleshooting.

CK C COIN DETCTR

Symptom:

The center coin detector was blocked while the changer was in the STANDBY state. One of the buckets may have an incorrect change load.

Corrective Action:

The center coin photodetector inputs is, or was, giving an incorrect signal, or the center hopper motor may have been running in standby mode.

1. The center LED on the dispenser may have burned out. If the LED is still OFF, check the wiring to that LED. Check the LED and replace it if it is defective.

2. If all LEDs are not lit, check the +5 VDC LED on the power control center. If it is not lit, check the power supply. If it is lit, check +5V power distribution lines in the harness (Blue wires).

3. Press the FUNCTION button. If the message reappears, check for dirt on the center detector and LED. If they are clean, check the coin photodetector (per *Section 3* of this manual). If it is OK, check the wiring from the photodetector to the CCC for an open connection or a short to Ground. If no problems are found, replace the CCC.

4. If this message does not reappear after resetting the bill changer, check the wiring to the hopper motors and coin detectors. If no problems are found, replace the CCC. To restore the bill changer to operation, press the FUNCTION button after correcting the problem.

NOTE:

This error code may be the result of a leaky output to the left hopper drive motor from the CCC. If this is the case, replace the CCC.

For a more complete troubleshooting sequence, refer to Troubleshooting Chart 030 at the end of this COIN DETECTOR troubleshooting.

CK R COIN DETCTR

Symptom:

The right coin detector was blocked while the bill changer was in the STANDBY state. One of the buckets may have an incorrect change load.

Corrective Action:

The right coin photodetector input is, or was, giving an incorrect signal / one of the hopper motors may have been running in standby mode.

1. The center LED on the dispenser may have burned out. If the LED is still OFF, check the wiring to that LED. Check the LED and replace it if it is defective.

2. If all LEDs are not lit, check the +5 VDC LED on the power control center. If it is not lit, check the power supply. If it is lit, check +5V power distribution lines in the harness (Blue wires).

3. Press the FUNCTION button. If the message reappears, check for dirt on the right detectors and LED. If they are clean, check the coin photodetector (per *Section 3*). If they are OK, check the wiring from the photodetectors to the CCC for an open connection or a short to Ground. If no problems are found, replace the CCC.

4. If this message does not reappear after resetting the bill changer, check the wiring to the hopper motors and coin detectors. If no problems are found, replace the CCC. To restore the bill changer to operation, press the FUNCTION button after correcting the problem.

NOTE:

This error code may be the result of a leaky output to the left hopper drive motor from the CCC. If this is the case, replace the CCC.

For a more complete troubleshooting sequence, refer to Troubleshooting Chart 030 at the end of this COIN DETECTOR troubleshooting.

CK COIN DETECTORS

Symptom:

More than one coin detector was blocked while the bill changer was in STANDBY. One of the buckets may have an incorrect change load, or one of the hopper motors may have been running in standby mode.

Corrective Action:

More than one of the coin photodetector inputs is, or was, giving an incorrect signal.

1. One of the LEDs on the dispenser may have burned out. If any LEDs are out, check the wiring to that LED. Check the LEDs and replace any defective LEDs.

2. If all LEDs are not lit, check the +5 VDC LED on the power control center. If it is not lit, check the power supply. If it is lit, check +5V power distribution lines in the harness (Blue wires).

3. Press the FUNCTION button. If the message reappears, check for dirt on the detectors and LEDs. If they are clean, check the coin photodetectors (per *Section 3*). If they are OK, check the wiring from the photodetectors to the CCC for open connections or shorts to Ground. If no problems are found, replace the CCC.

4. If this message does not reappear after resetting the bill changer, check the wiring to the hopper motors and coin detectors. If no problems are found, replace the CCC. To restore the bill changer to operation, press the FUNCTION button after correcting the problem.

NOTE:

This error code may be the result of a leaky output to the hopper drive motor from the CCC. If this is the case, replace the CCC.

For a more complete troubleshooting sequence, refer to Troubleshooting Chart 030 at the end of this COIN DETECTOR troubleshooting.

Chart 030 - Shutdown – Out Of Service Lamp Lit

Display shows: **CK L COIN DETCTR** *– OR –* **CK C COIN DETCTR** *– OR –* **CK R COIN DETCTR** *– OR –* **CK COIN DETCTRS**

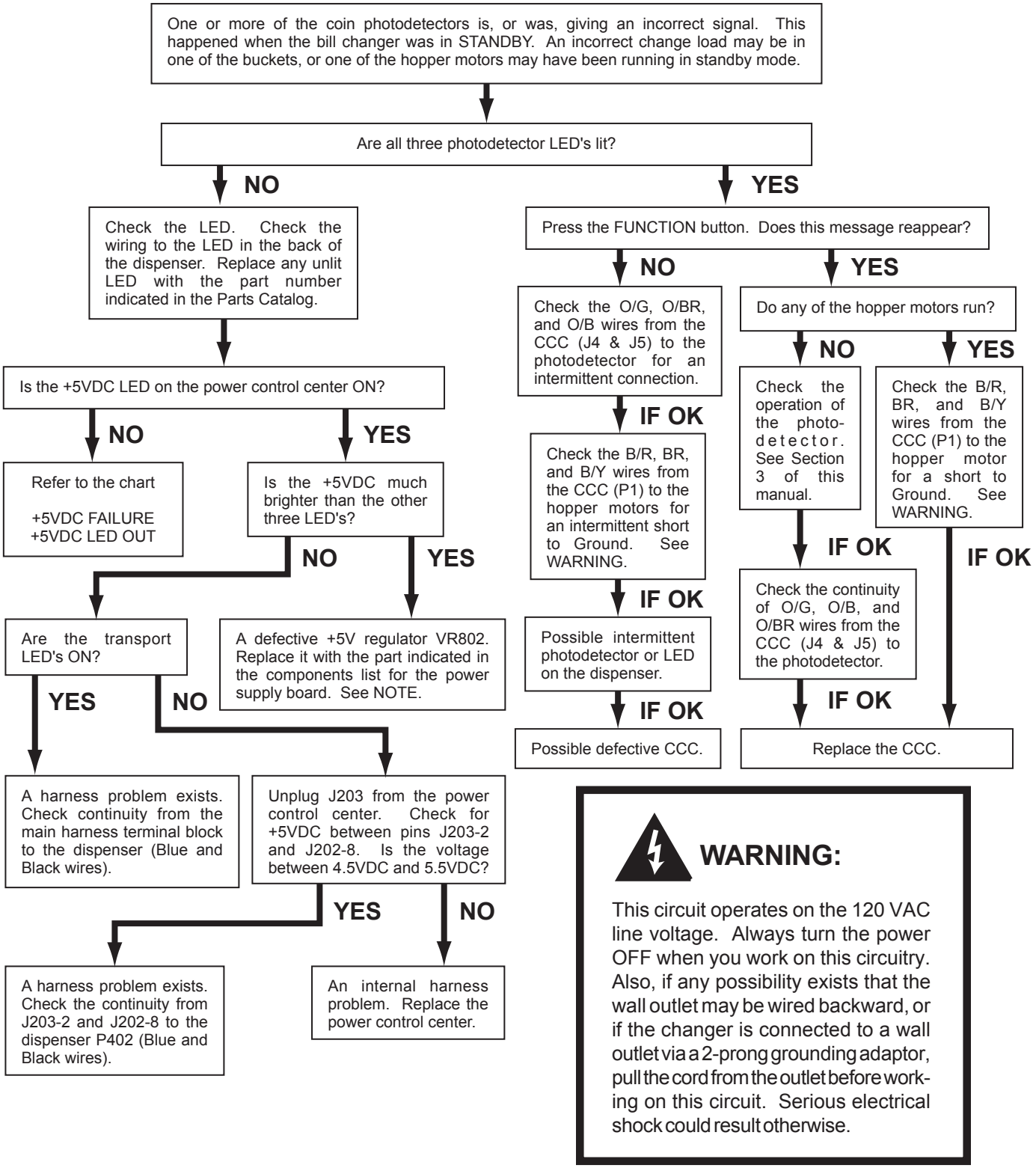

WARNING:

This circuit operates on the 120 VAC line voltage. Always turn the power OFF when you work on this circuitry. Also, if any possibility exists that the wall outlet may be wired backward, or if the changer is connected to a wall outlet via a 2-prong grounding adaptor, pull the cord from the outlet before working on this circuit. Serious electrical shock could result otherwise.

NOTE:

If the +5 VDC LED is much brighter than the others, due to VR801 being defective, the transport cell LEDs, display LEDs, and photodetector LEDs could be burned out.

L DETCTR ON LONG

Symptom:

While replenishing, the left detector was blocked too long.

Corrective Action:

During the last replenish cycle, the system detected a coin pulse from the dispenser that was much longer than normal. Most likely, an incorrect change load has been deposited into one of the change buckets.

1. A detector LED could have burned out during the replenish cycle. If the LEDs are lit, reset the bill changer and see if it goes back into SHUTDOWN. If so, refer to new status message that will appear.

2. If the bill changer stays in service, then check the left photo detector (per *Section 3*) and wiring.

3. Also, check the upper coin chute for anything that would hold a coin up and block the detector.

4. If everything looks OK, replace the CCC.

5. To restore the bill changer to service, press the FUNCTION button after correcting the problem.

For a more complete troubleshooting sequence, refer to Troubleshooting Chart 040 at the end of this DETECTOR troubleshooting.

C DETCTR ON LONG

Symptom:

While replenishing, the center detector was blocked too long.

Corrective Action:

During the last replenish cycle, the system detected a coin pulse from the dispenser that was much longer than normal. Most likely, an incorrect change load has been deposited into one of the change buckets.

1. A detector LED could have burned out during the replenish cycle. If the LEDs are lit, reset the bill changer and see if it goes back into SHUTDOWN. If so, refer to new status message that will appear.

2. If the bill changer stays in service, then check the center photo detector (per *Section 3*) and wiring.

3. Also, check the upper coin chute for anything that would hold a coin up and block the detector.

4. If everything looks OK, replace the CCC.

5. To restore the bill changer to service, press the FUNCTION button after correcting the problem.

For a more complete troubleshooting sequence, refer to Troubleshooting Chart 040 at the end of this DETECTOR troubleshooting.

R DETCTR ON LONG

Symptom:

While replenishing, the right detector was blocked too long.

Corrective Action:

During the last replenish cycle, the system detected a coin pulse from the dispenser that was much longer than normal. Most likely, an incorrect change load has been deposited into one of the change buckets.

1. A detector LED could have burned out during the replenish cycle. If the LEDs are lit, reset the bill changer and see if it goes back into SHUTDOWN. If so, refer to new status message that will appear.

2. If the bill changer stays in service, then check the right photo detector (per *Section 3*) and wiring.

3. Also, check the upper coin chute for anything that would hold a coin up and block the detector.

4. If everything looks OK, replace the CCC.

5. To restore the bill changer to service, press the FUNCTION button after correcting the problem.

For a more complete troubleshooting sequence, refer to Troubleshooting Chart 040 at the end of this DETECTOR troubleshooting.

DETCTRS ON LONG

Symptom:

While replenishing, more than one detector was blocked too long.

Corrective Action:

During the last replenish cycle, the system detected a coin pulse from the dispenser that was much longer than normal. Most likely, an incorrect change load has been deposited into one of the change buckets.

1. A detector LED could have burned out during the replenish cycle. If the LEDs are lit, reset the bill changer and see if it goes back into SHUTDOWN. If so, refer to new status message that will appear.

2. If the bill changer stays in service, then check the photo detectors (per *Section 3*) and wiring.

3. If all three LEDs are not lit, check the +5 VDC LED on the power supply. If the +5 VDC LED is OFF, check the power supply. If the +5 VDC LED is ON, check the harness.

4. Also, check the upper coin chute for anything that would hold a coin up and block the detectors.

5. If everything looks OK, replace the CCC.

6. To restore the bill changer to service, press the FUNCTION button after correcting the problem.

For a more complete troubleshooting sequence, refer to Troubleshooting Chart 040 at the end of this DETECTOR troubleshooting.

CANNOT PAYOUT VALUE

Symptom:

Unable to pay out inserted combination.

Corrective Action:

Check to make sure the coin mechanism is wired correctly. Reset by pressing the FUNCTION button.

ERROR ??

Symptom:

Unknown error code xxx.

Corrective Action:

The changer detected an unknown error.

1. Press the FUNCTION button to reset the bill changer.
2. Run a few test vends.
3. If the error returns, replace the CCC.
4. If OK, put the changer back in service and watch for recurrence of the error.

Chart 040 - Shutdown - Out Of Service Lamp Lit

Display shows: **L DETCTR ON LONG** *– OR –* **C DETCTR ON LONG** *– OR –* **R DETCTR ON LONG**

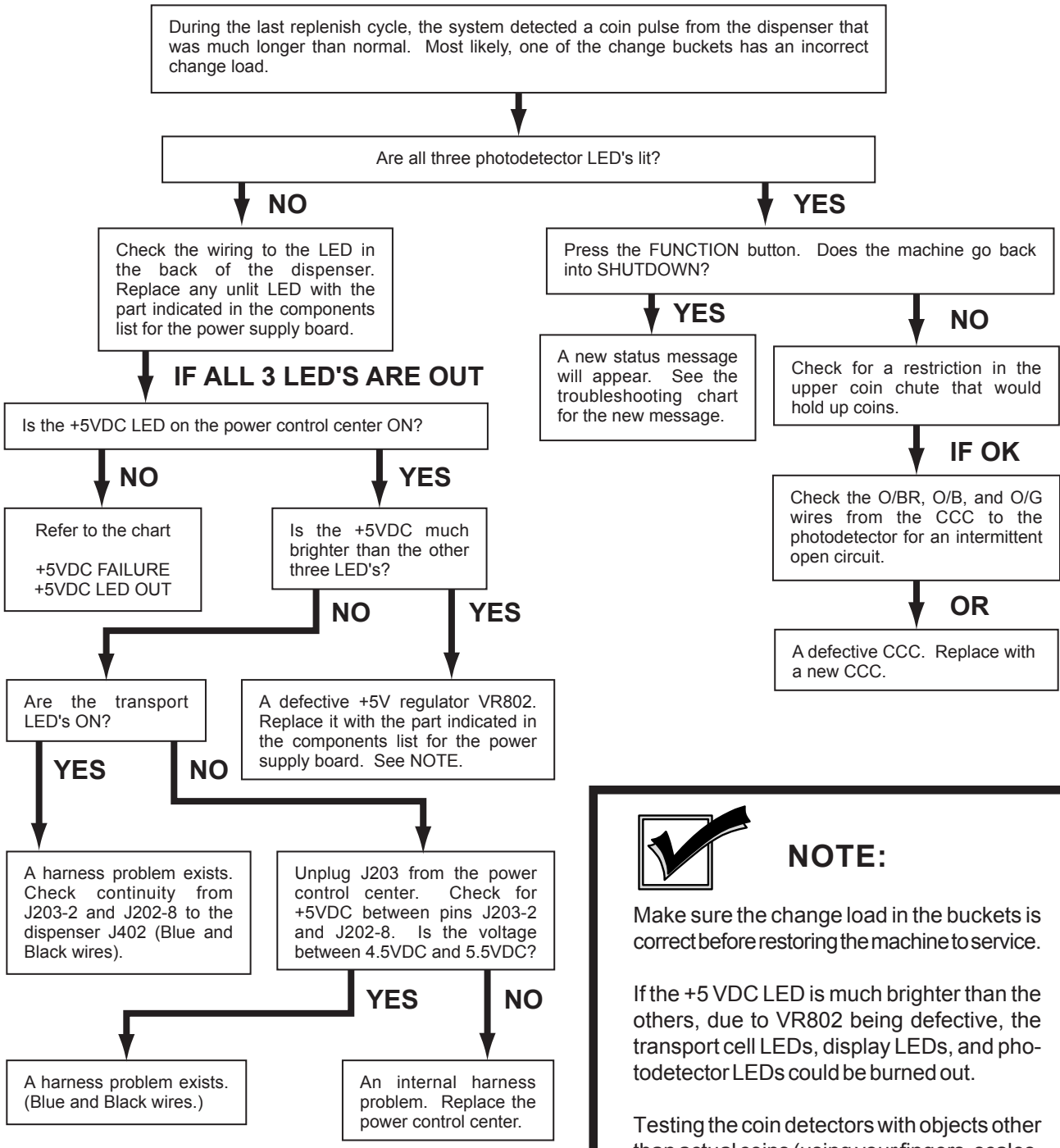

NOTE:

Make sure the change load in the buckets is correct before restoring the machine to service.

If the +5 VDC LED is much brighter than the others, due to VR802 being defective, the transport cell LEDs, display LEDs, and photodetector LEDs could be burned out.

Testing the coin detectors with objects other than actual coins (using your fingers, scales, metal strips, etc.) may cause the machine to shutdown with this fault message showing.

EXTRA COIN - L HOP

Symptom:

More than one extra coin was detected passing through the left detector.

Corrective Action:

Since last time bill changer was reset, the bill changer may have dispensed two more coins than it should have during the replenish cycle. One of the buckets could have an incorrect change load.

1. Most likely, the problem is not electrical. Probable causes are: Faulty hopper motor brakes, or worn parts on hopper motors.

2. Also, the possible cause could be intermittent connections to the coin detectors, detector LEDs, or wiring.

3. To restore the bill changer to operation, press the FUNCTION button after correcting the problem.

For a more complete troubleshooting sequence, refer to Troubleshooting Chart 050 at the end of this EXTRA COIN troubleshooting.

EXTRA COIN - C HOP

Symptom:

More than one extra coin was detected passing through the center detector.

Corrective Action:

Since last time bill changer was reset, the bill changer may have dispensed two more coins than it should have during the replenish cycle. One of the buckets could have an incorrect change load.

1. Most likely, the problem is not electrical. Probable causes are: Faulty hopper motor brakes, or worn parts on hopper motors.

2. Also, the possible cause could be intermittent connections to the coin detectors, detector LEDs, or wiring.

3. To restore the bill changer to operation, press the FUNCTION button after correcting the problem.

For a more complete troubleshooting sequence, refer to Troubleshooting Chart 050 at the end of this EXTRA COIN troubleshooting.

EXTRA COIN - R HOP

Symptom:

More than one extra coin was detected passing through the right detector.

Corrective Action:

Since last time bill changer was reset, the bill changer may have dispensed two more coins than it should have during the replenish cycle. One of the buckets could have an incorrect change load.

1. Most likely, the problem is not electrical. Probable causes are: Faulty hopper motor brakes, or worn parts on hopper motors.

2. Also, the possible cause could be intermittent connections to the coin detectors, detector LEDs, or wiring.

3. To restore the bill changer to operation, press the FUNCTION button after correcting the problem.

For a more complete troubleshooting sequence, refer to Troubleshooting Chart 050 at the end of this EXTRA COIN troubleshooting.

Chart 050 - Shutdown - Out Of Service Lamp Lit

Display shows: **EXTRA COIN L HOP** *– OR –* **EXTRA COIN C HOP** *– OR –* **EXTRA COIN R HOP**

Since the last time the bill changer was reset, it may have dispensed two more coins than it should have. Most likely, one of the change buckets has an incorrect change load.

↓

Check the indicated hopper motor for faulty brake operation or coasting armatures. If bad, replace the motor.

↓ **IF OK**

The computer received wrong count signals. Check the O/G, O/BR, and O/B wires from the CCC (P4 & P5) to the dispenser. Check the +5V (Blue wire) and the Ground (Black wire) to the dispenser.

↓ **IF OK**

Check for dirt or film on the photodetector and LED. Clean if dirty.

↓ **IF OK**

Make several test vends. If the problem recurs, replace the CCC. If not, restore the machine to service and watch for recurrences.

NOTE:

Make sure change load in buckets is correct before restoring machine to service.

Testing the detectors with objects other than actual coins (using your fingers, scales, metal strips, etc.) may cause the machine to shutdown with this fault message showing.

L HOPPER EMPTY

Symptom:

The left hopper is empty.

Corrective Action:

The bill changer was shutdown because the count from the left-hand hopper was not satisfied within 180 seconds.

One change bucket will have an incorrect change load from the left hopper.

1. Check the left-hand hopper. If not empty or low on coins, check for dirt buildup on the coin path or a jammed hopper.

2. If the hopper looks OK, check the change buckets to see if one is overloaded with coins from the left-hand hopper.

3. If it is overloaded, check the left coin detector or the wiring to the detector. If these check OK, replace the CCC.

4. If the buckets are not overloaded, reset the bill changer and TEST VEND to see if the left-hand hopper runs. If the motor does not run, check the motor and wiring to it. If OK, replace the CCC.

5. To restore the bill changer to operation, press the FUNCTION button after correcting the problem.

NOTE:

If a customer has been "shortchanged" on a $10 or $20 bill when this fault occurred, after resetting the changer to normal operation the display will show "AMT DUE X Y Z" with X, Y, and Z being the number of coins or tokens the customer is owed from the left, center, and right hoppers respectively.

For a more complete troubleshooting sequence, refer to Troubleshooting Chart 060 at the end of this HOPPER EMPTY troubleshooting.

C HOPPER EMPTY

Symptom:

The center hopper is empty.

Corrective Action:

The bill changer was shutdown because the count from the center hopper was not satisfied within 180 seconds.

One change bucket will have an incorrect change load from the center hopper.

1. Check the center hopper.
2. If it is not empty or low on coins, check for dirt buildup on the coin path or a jammed hopper.
3. If the hopper looks OK, check the change buckets to see if one is overloaded with coins from the center hopper.
4. If it is overloaded, check the center coin detector or the wiring to the detector. If these check OK, replace the CCC.
5. If the buckets are not overloaded, reset the bill changer and TEST VEND to see if the center hopper runs. If the motor does not run, check the motor and the wiring to it. If OK, replace the CCC.
6. To restore the bill changer to operation, press the FUNCTION button after correcting the problem.

NOTE:

If a customer has been "shortchanged" on a $10 or $20 bill when this fault occurred, after resetting the changer to normal operation the display will show "AMT DUE X Y Z" with X, Y, and Z being the number of coins or tokens the customer is owed from the left, center, and right hoppers respectively.

For a more complete troubleshooting sequence, refer to Troubleshooting Chart 060 at the end of this HOPPER EMPTY troubleshooting.

R HOPPER EMPTY

Symptom:

The right hopper is empty.

Corrective Action:

The bill changer was shutdown because the count from the right-hand hopper was not satisfied within 180 seconds.

One change bucket will have an incorrect change load from the right-hand hopper.

1. Check the right-hand hopper.
2. If it is not empty or low on coins, check for dirt buildup on the coin path or a jammed hopper.
3. If the hopper looks OK, check the change buckets to see if one is overloaded with coins from the right-hand hopper.
4. If it is overloaded, check the right-hand coin detector or the wiring to the detector. If these check OK, replace the CCC.
5. If the buckets are not overloaded, reset the bill changer and TEST VEND to see if the right-hand hopper runs. If the motor does not run, check the motor and the wiring to it. If it is OK, replace the CCC.
6. To restore the bill changer to operation, press the FUNCTION button after correcting the problem.

NOTE:

If a customer has been "shortchanged" on a $10 or $20 bill when this fault occurred, after resetting the changer to normal operation the display will show "AMT DUE X Y Z" with X, Y, and Z being the number of coins or tokens the customer is owed from the left, center, and right hoppers respectively.

For a more complete troubleshooting sequence, refer to Troubleshooting Chart 060 at the end of this HOPPER EMPTY troubleshooting.

HOPPERS EMPTY

Symptom:

All hoppers are empty (MC mode message).

Corrective Action:

1. Refill all the hoppers.
2. The changer shut down because the count could not be satisfied using any of the hoppers.
3. One change bucket will have an incorrect load.
4. If any of he hoppers are not empty, check for dirt buildup on the coin path or a jammed hopper.
5. Reset the bill changer by pushing the FUNCTION button then TEST VEND to see if all the hopper motors start running. If one or more motors fail to run, check the motors and associated wiring. If they are OK, replace the CCC.
6. When the problem is corrected, press the FUNCTION button to return the changer to service.

NOTE:

If a customer has been "shortchanged" on a $10 or $20 bill when this fault occurred, after resetting the changer to normal operation the display will show "AMT DUE X Y Z" with X, Y, and Z being the number of coins or tokens the customer is owed from the left, center, and right hoppers respectively.

For a more complete troubleshooting sequence, refer to Troubleshooting Chart 060 at the end of this HOPPER EMPTY troubleshooting.

Chart 060 - Shutdown - Out Of Service Lamp Lit

Display shows: **L HOPPER EMPTY** *– OR –* **C HOPPER EMPTY** *– OR –* **R HOPPER EMPTY** *– OR –* **HOPPERS EMPTY**

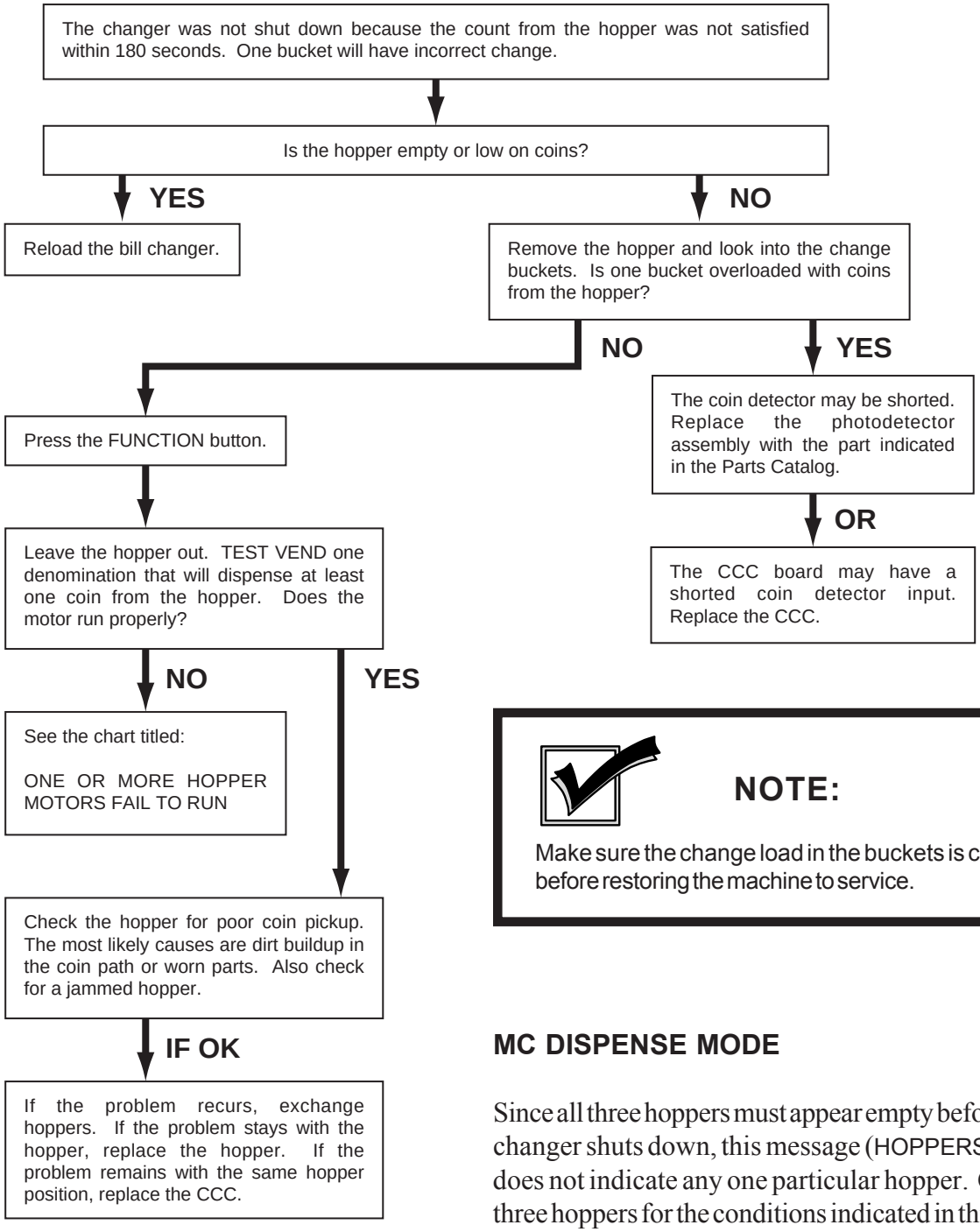

NOTE:

Make sure the change load in the buckets is correct before restoring the machine to service.

MC DISPENSE MODE

Since all three hoppers must appear empty before the bill changer shuts down, this message (HOPPERS EMPTY) does not indicate any one particular hopper. Check all three hoppers for the conditions indicated in this chart.

CK STACKER

Symptom:

The stacker did not return to the HOME position.

If the machine is in SHUTDOWN and this message is showing, the bill stacker monitor input is active.

1. Leave the power ON. Disconnect the main harness at the bill stacker. Press the FUNCTION button.
2. If the message disappears, replace the bill stacker. If the message reappears, replace the computer control center.
3. If the message still exists, check the stacker monitor line (Green/White wire) from the stacker plug to the CCC for a short to the chassis.
4. The stacker cam switch may be out of adjustment, the stacker relay may be stuck, the stacker motor brake may be stuck, or the motor itself may be defective.
5. To restore the machine to operation, press the FUNCTION button after correcting the problem.

For a more complete troubleshooting sequence, refer to Troubleshooting Chart 070.

CK STACKER NL

Symptom:

The stacker engages, but does not leave the HOME position.

1. Leave the power ON. Disconnect the main harness at the bill stacker. Press the FUNCTION button.
2. If the message disappears, replace the bill stacker. If the message reappears, replace the computer control center.
3. If the message still exists, check the stacker monitor line (Green/White wire) from the stacker plug to the CCC for a short to the chassis.
4. The stacker cam switch may be out of adjustment, the stacker relay may be stuck, the stacker motor brake may be stuck, or the motor itself may be defective.
5. To restore the machine to operation, press the FUNCTION button after correcting the problem.

For a more complete troubleshooting sequence, refer to Troubleshooting Chart 070.

Chart 070 - Shutdown - Out Of Service Lamp Lit

Display shows: **CK STACKER**

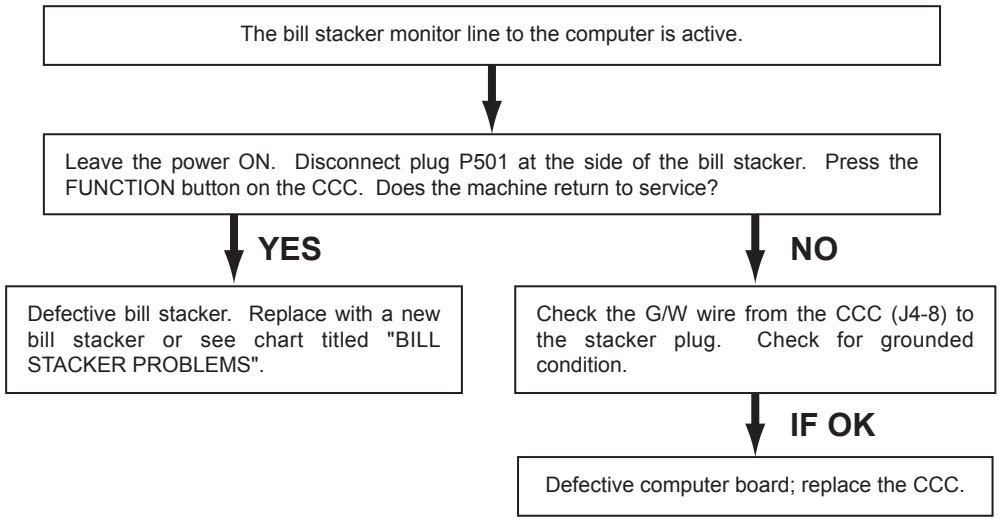

NOTE:

The machine can be returned to service by turning the power OFF and correcting the problem. (In some cases, the FUNCTION button may have to be pressed.)

BUCKET PWR FLT

Symptom:

One of the bucket coils was detected active when it should not be.

Corrective Action:

Machine has been shut down because one or more of the bucket solenoids were energized during standby. Most likely, one of the buckets has an incorrect change load.

1. Check R813 on the power supply assembly for possible shorts to the chassis.
2. Check C816 on the power supply circuit board for excess leakage.
3. Check for a faulty CCC or a short in the wiring to the buckets.
4. Also check for a faulty suppression diode on the dispenser.
5. Check the diodes.
6. To restore the machine to service, press the FUNCTION button after correcting the problem.

Use a volt-ohmmeter in accordance with the troubleshooting chart for this error to establish whether on not it is safe to install a replacement CCC[1].

For a more complete troubleshooting sequence, refer to Troubleshooting Chart 080 on the next page.

[1]Installing a replacement CCC in the machine without determining the cause of the original failure may destroy the replacement CCC.

Chart 080 - Shutdown - Out Of Service Lamp Lit

Display shows: **BUCKET PWR FLT**

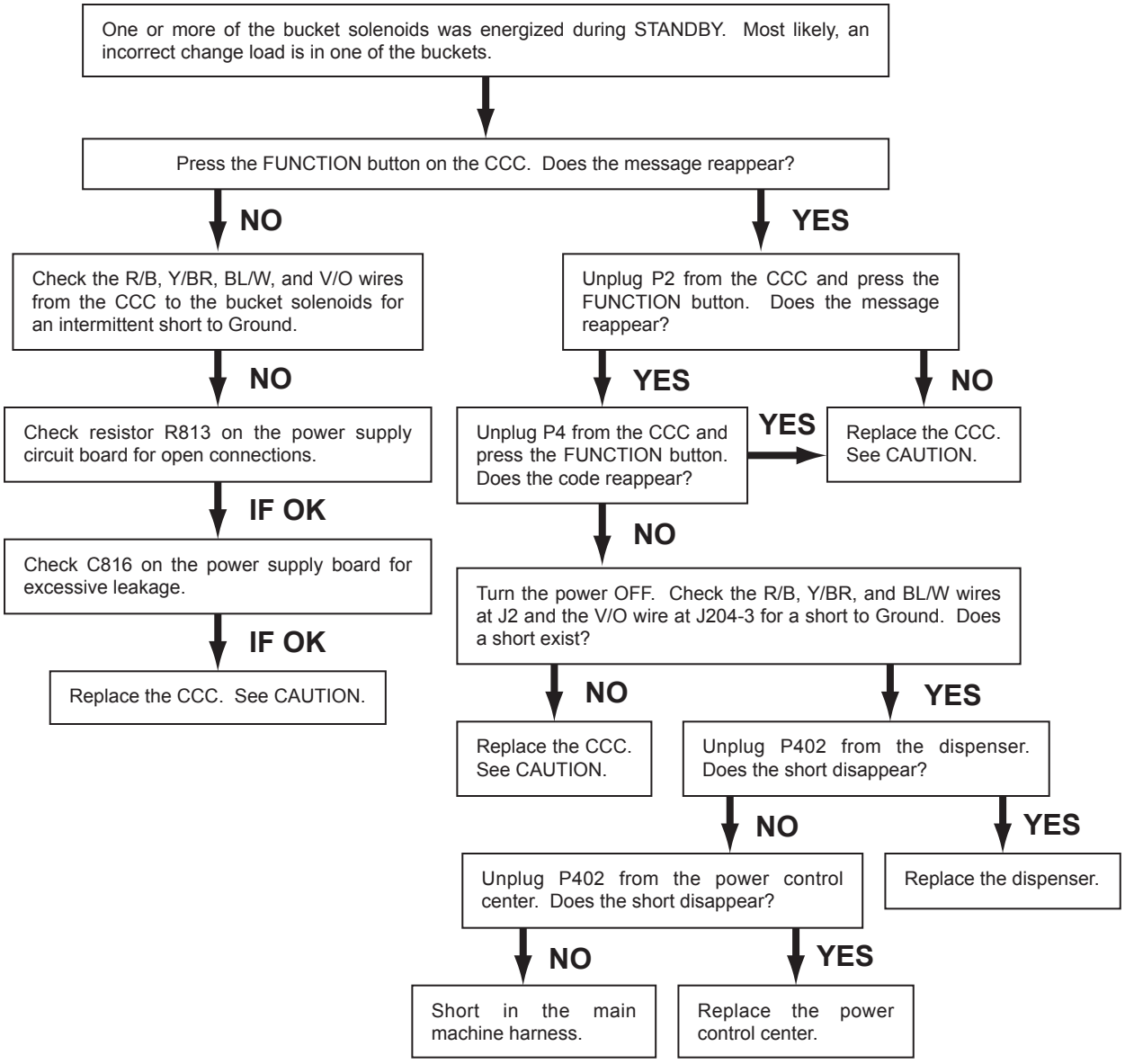

CAUTION:

Installing a new CCC without determining the cause of the failure may destroy the new board. Use an ohmmeter to determine if it is safe to install a new CCC. If you use an ohmmeter, check for shorts (less than seven ohms) between the V/O wire, Y/BR, and BL/W or Ground.

BUCKET NOT OPEN

Symptom:

A bucket coil did not draw current when it was energized.

This is a fault code.

The machine has been shut down because one of the bucket solenoids failed to energize properly for a normal vend. An incorrect change load may be in one of the buckets.

Corrective Action:

1. The most likely cause in a faulty computer control center or open connection in the wiring to the bucket.
2. Check R813 on the power supply assembly for possible open circuit conditions.
3. Possible defective drive transistor on the CCC – replace the CCC[1].
4. To restore the machine to service, press the FUNCTION button after correcting the problem.

For a more complete troubleshooting sequence, refer to Troubleshooting Chart 090 on the next page.

[1]Use a volt-ohmmeter in accordance with the troubleshooting chart for this error to establish whether on not it is safe to install a replacement board. Installing a replacement CCC in the machine without determining the cause of the original failure may destroy the replacement CCC.

Chart 090 - Shutdown - Out Of Service Lamp Lit

Display shows: **BUCKET NOT OPEN**

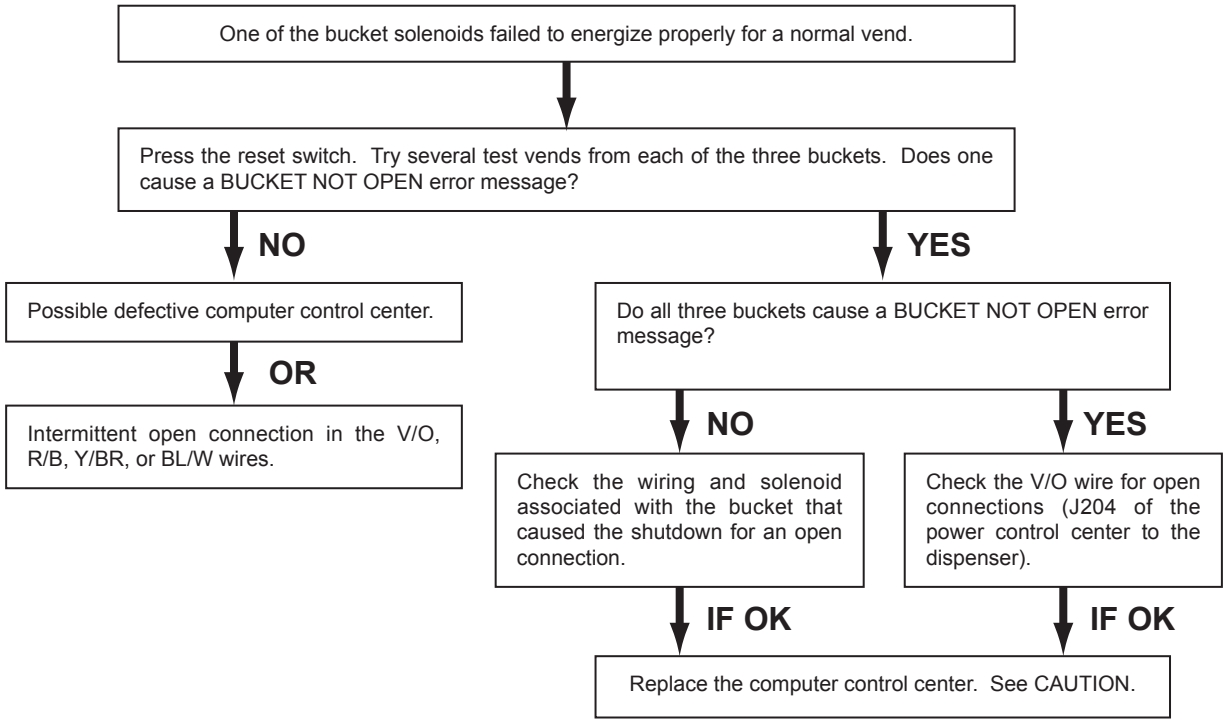

CAUTION:

Installing a new CCC without determining the cause of the failure may destroy the new board. Use an ohmmeter to determine if it is safe to install a new CCC. If you use an ohmmeter, check for shorts (less than seven ohms) between the V/O wire, Y/BR, and BL/W or Ground.

BUCKET STAYS ON

Symptom:

A bucket solenoid continued to draw current after it was de-energized.

This is a fault code.

The machine has been shut down because one of the bucket solenoids was energized too long during a normal vend. Most likely, one of the buckets has an incorrect change load.

Corrective Action:

1. The most likely cause in a faulty computer control center or an intermittent short in the wiring to the buckets.
2. Also, check for a faulty suppression diode on the dispenser.
3. Check the diodes.
4. To restore the machine to service, press the FUNCTION button after correcting the problem.
5. Use a volt-ohmmeter in accordance with *Troubleshooting Chart 100* for this error to establish whether on not it is safe to install a replacement CCC[1].

For a more complete troubleshooting sequence, refer to Troubleshooting Chart 100 on the next page.

[1]Installing a replacement CCC in the machine without determining the cause of the original failure may destroy the replacement CCC.

Chart 100 - Shutdown - Out Of Service Lamp Lit

Display shows: **BUCKET STAYS ON**

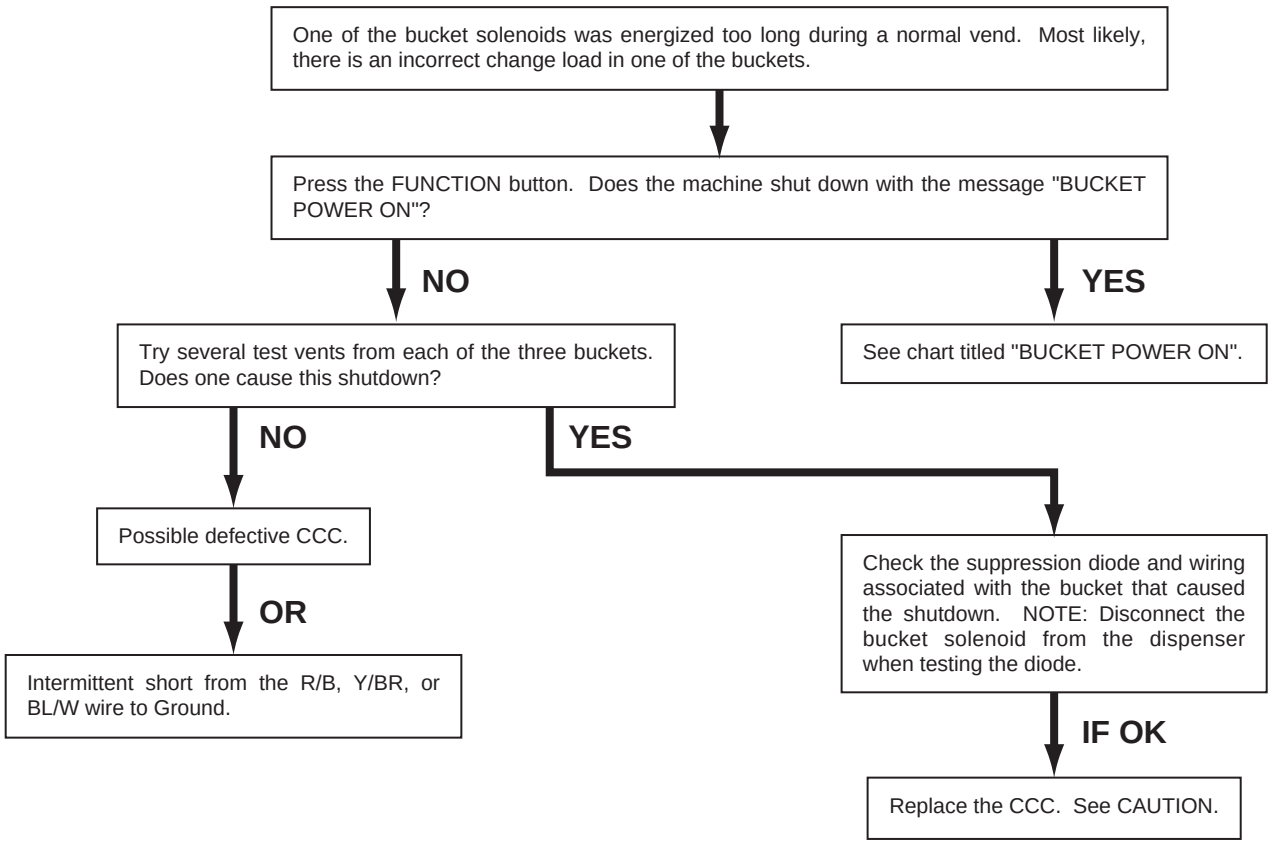

CAUTION:

Installing a new CCC without determining the cause of the failure may destroy the new board. Use an ohmmeter to determine if it is safe to install a new CCC. If you use an ohmmeter, check for shorts (less than seven ohms) between the V/O wire, Y/BR, and BL/W or Ground.

One or More Hopper Motors Fail to Run

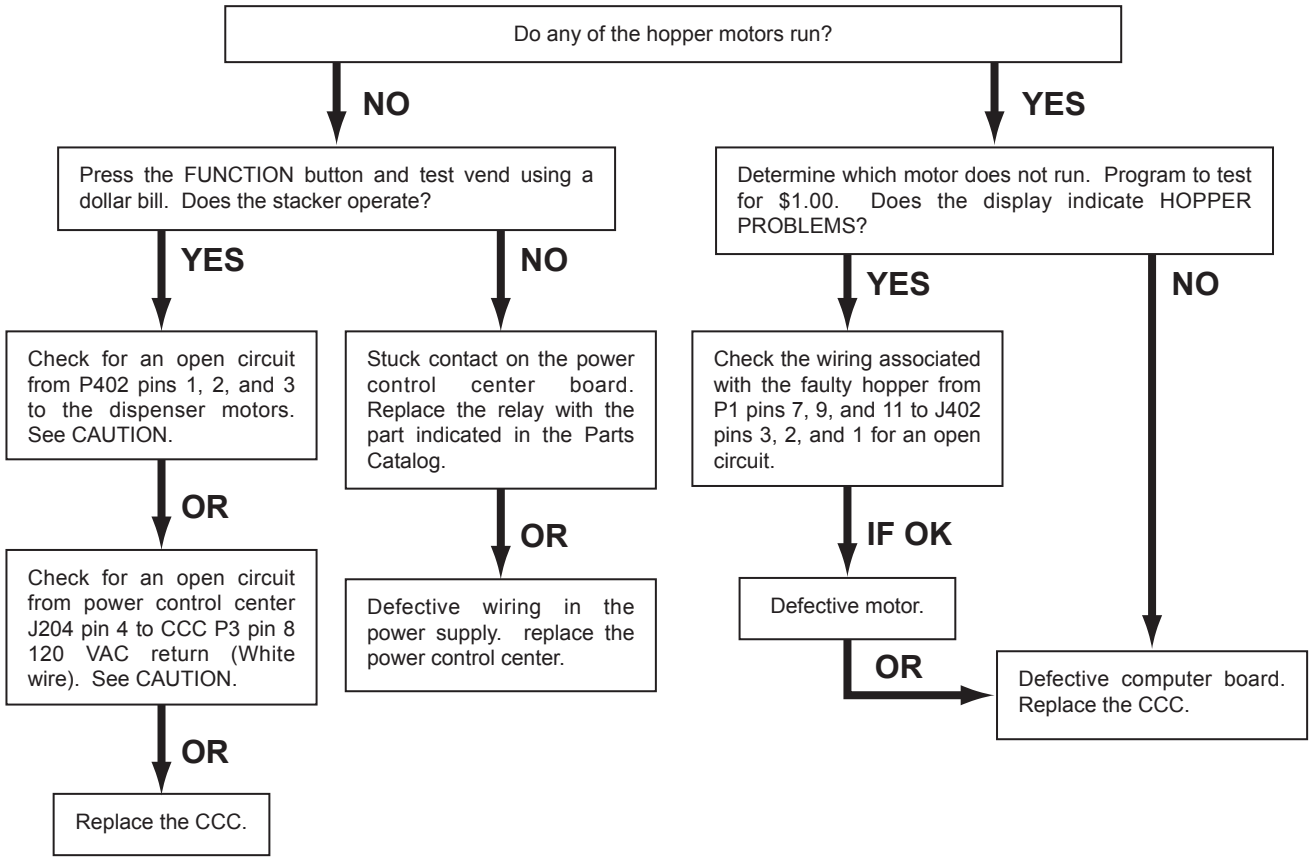

WARNING:

120 VAC circuitry. Turn the power OFF and pull the plug from the wall before making this check.

Bill Transport Fails to Run in One or Both Directions (Works OK for Coins and Test Switches)

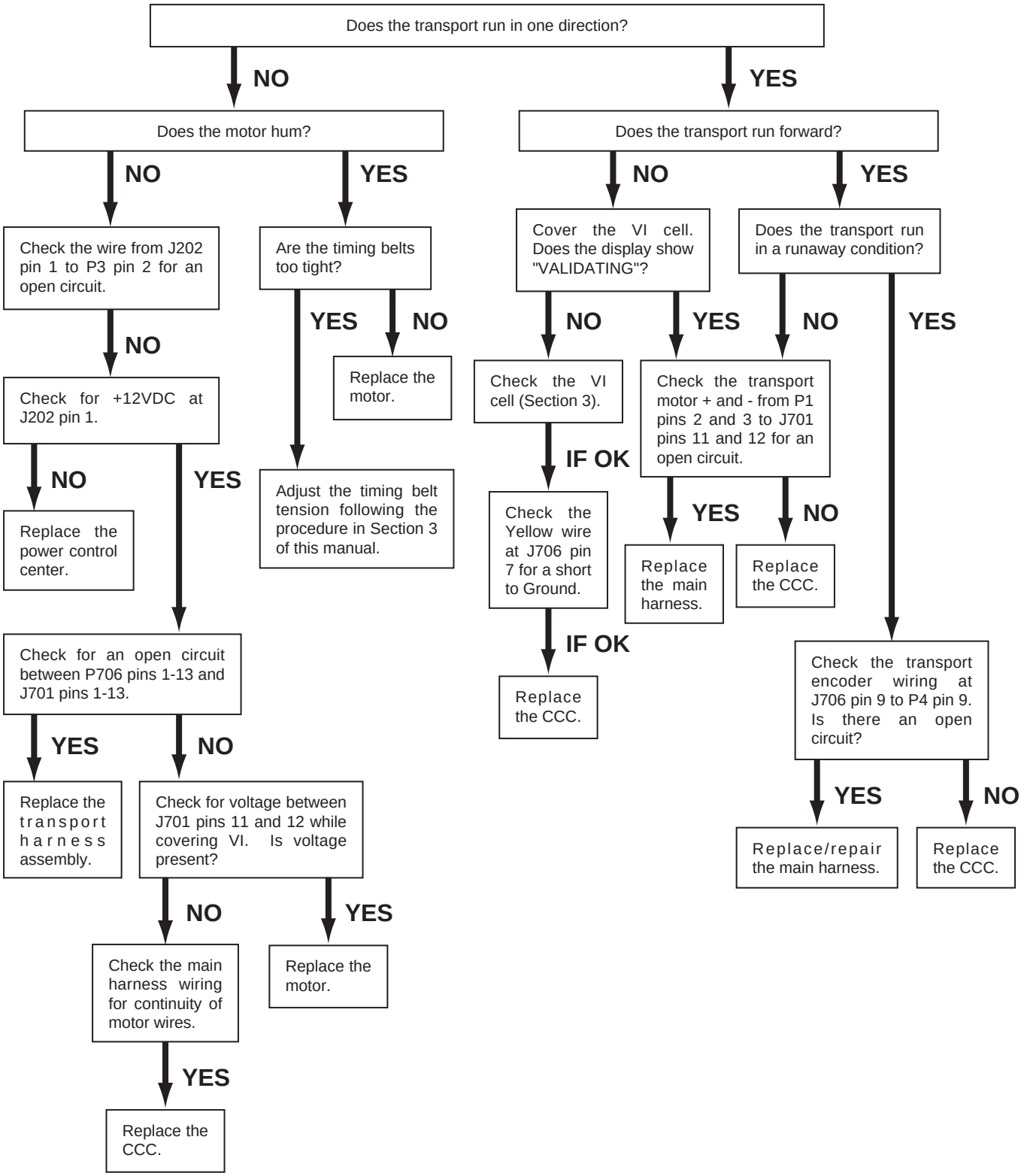

Bill Changer Steals Coins - Works OK with Bills

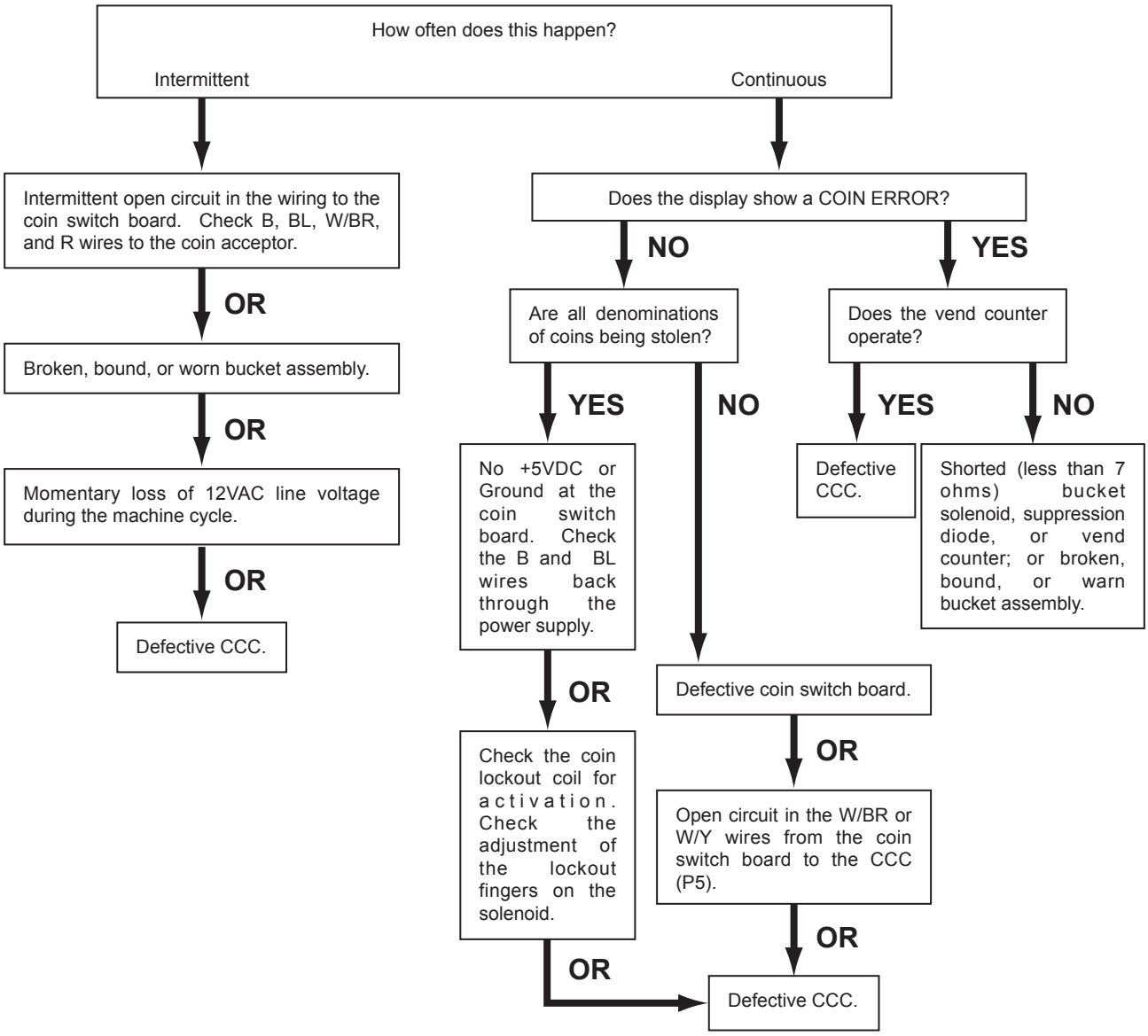

Bill Changer Steals Bills - Works OK with Coins

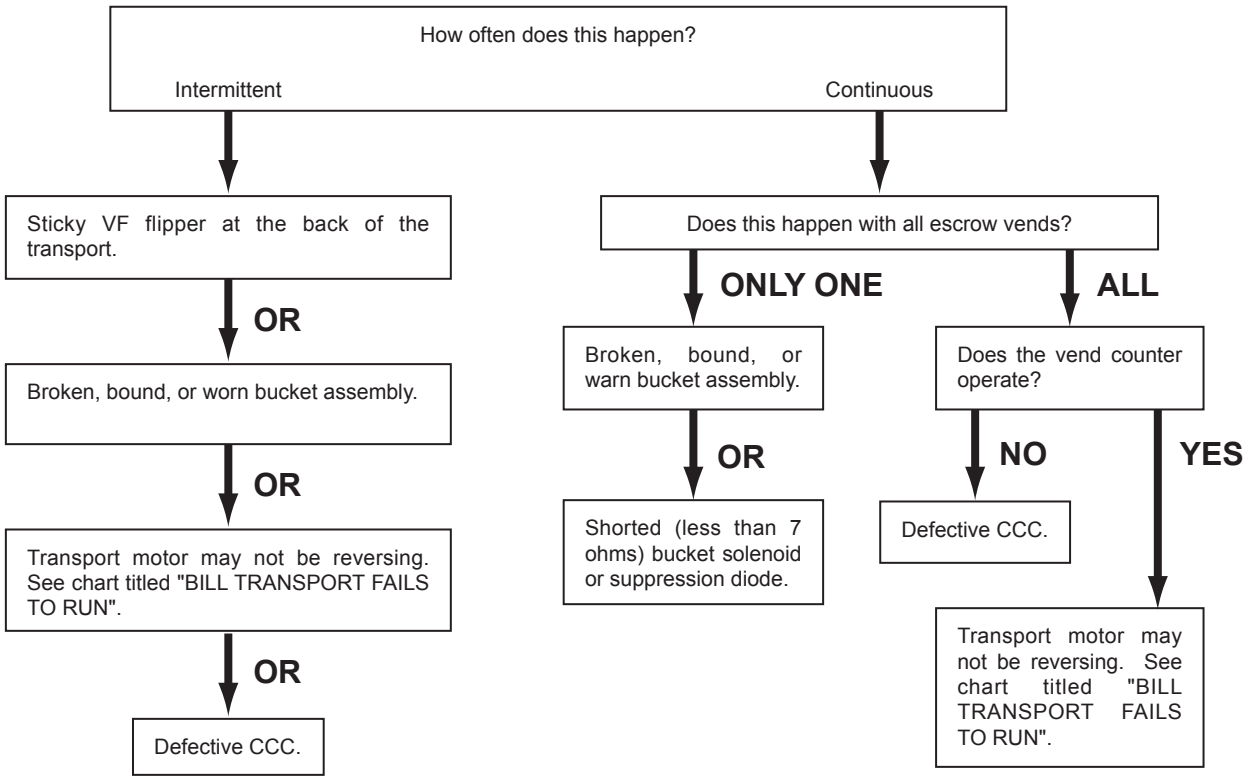

Bill Changer Steals Bills and Coins (Gives No Change)

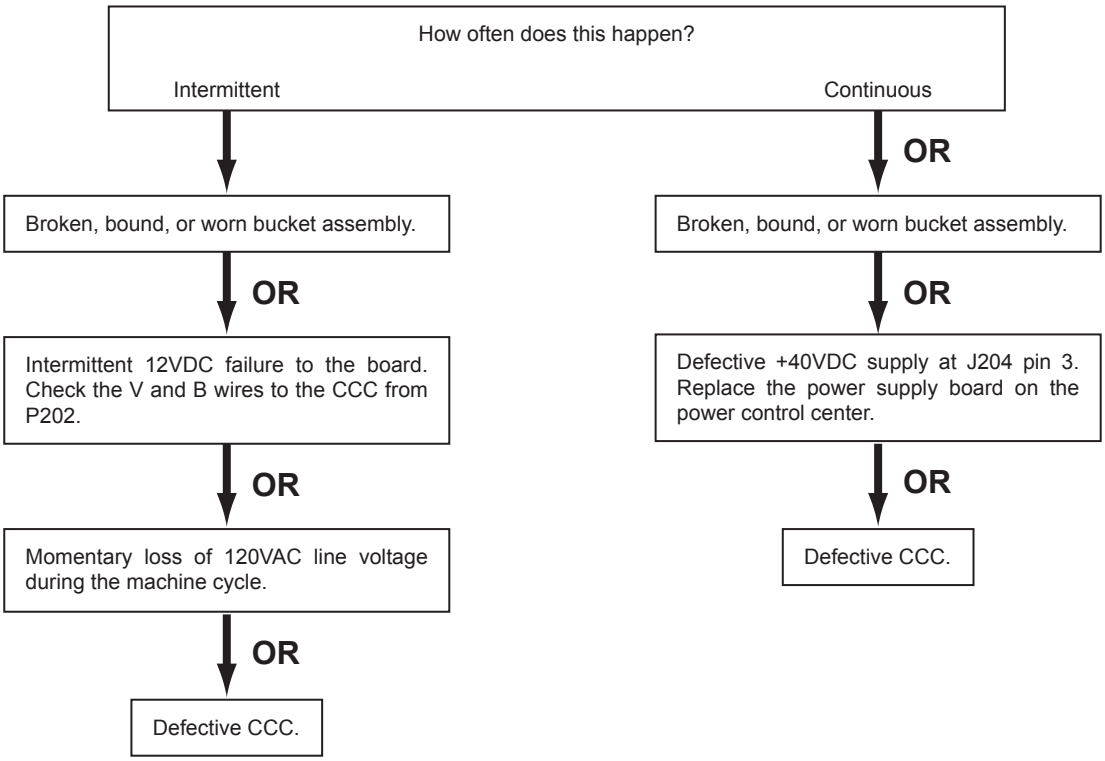

Bill Changer Gives Erratic Payout for Bills and Coins (No Error Messages)

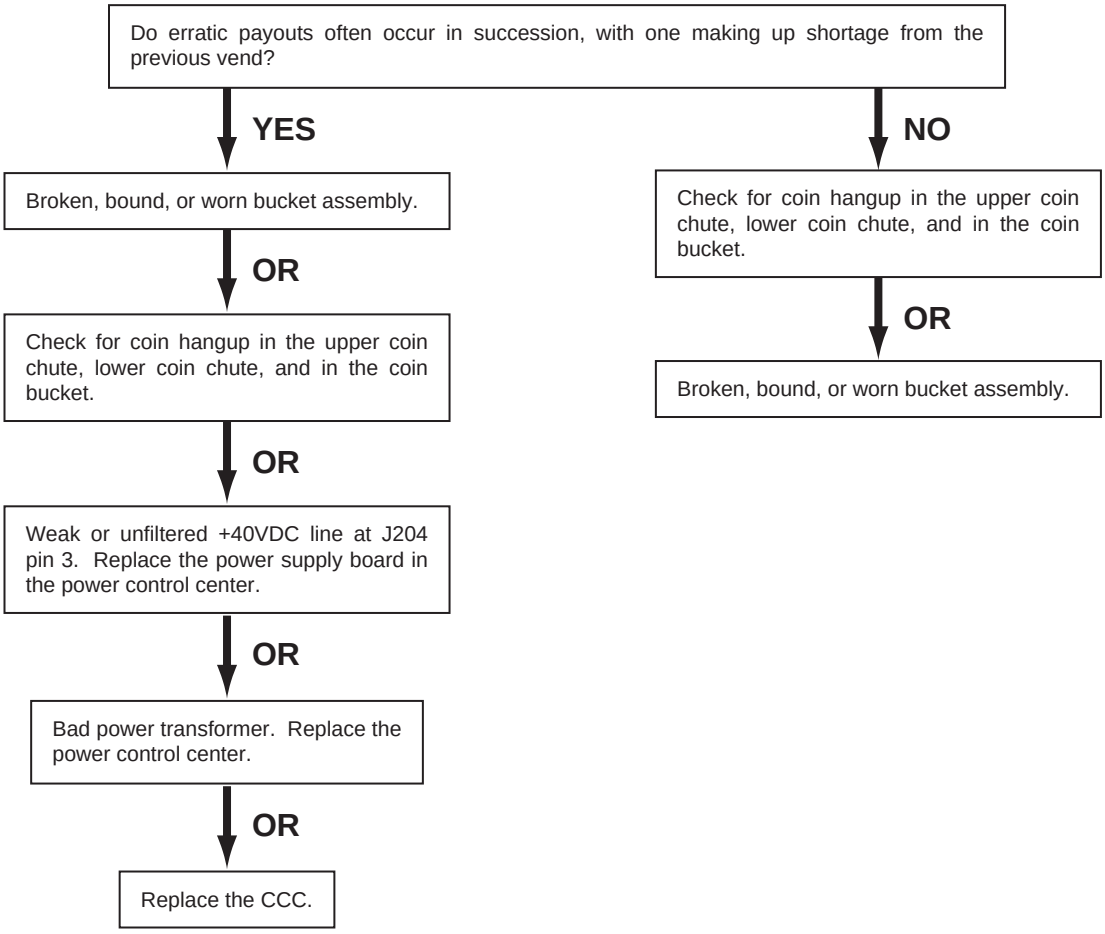

Bill Stacker Problems

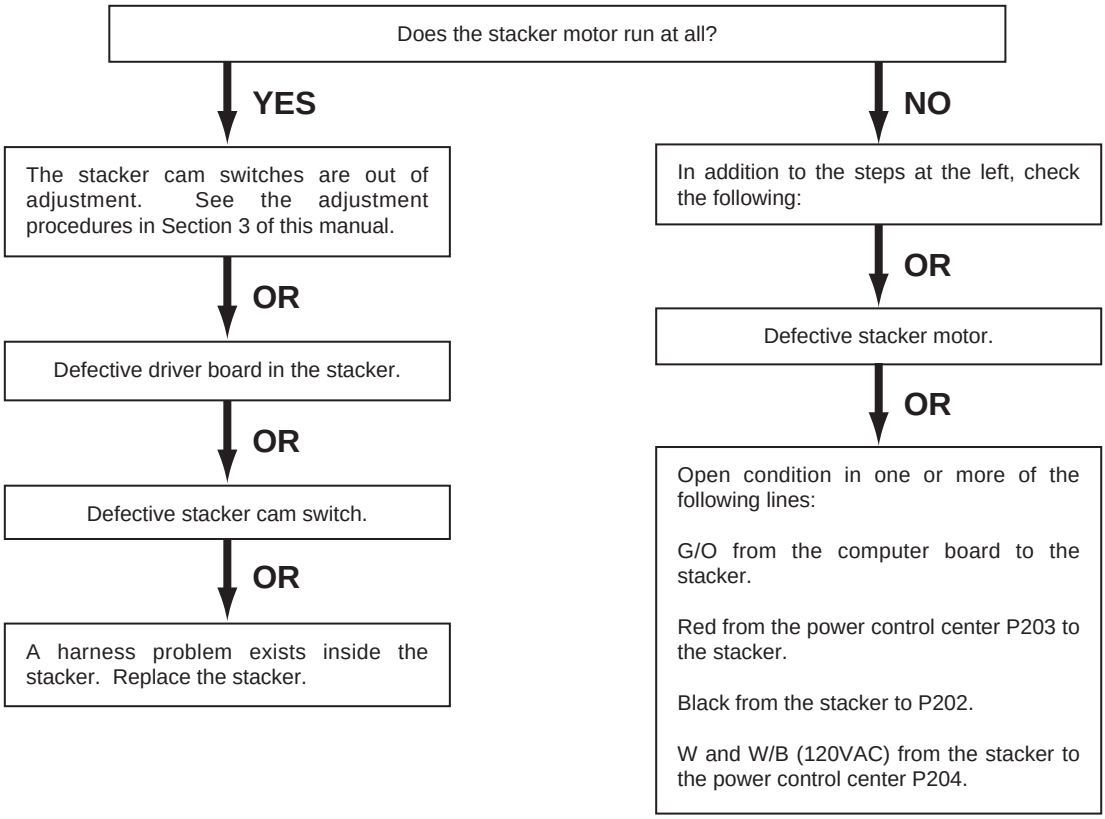

+5 VDC Failure, +5 VDC LED Out

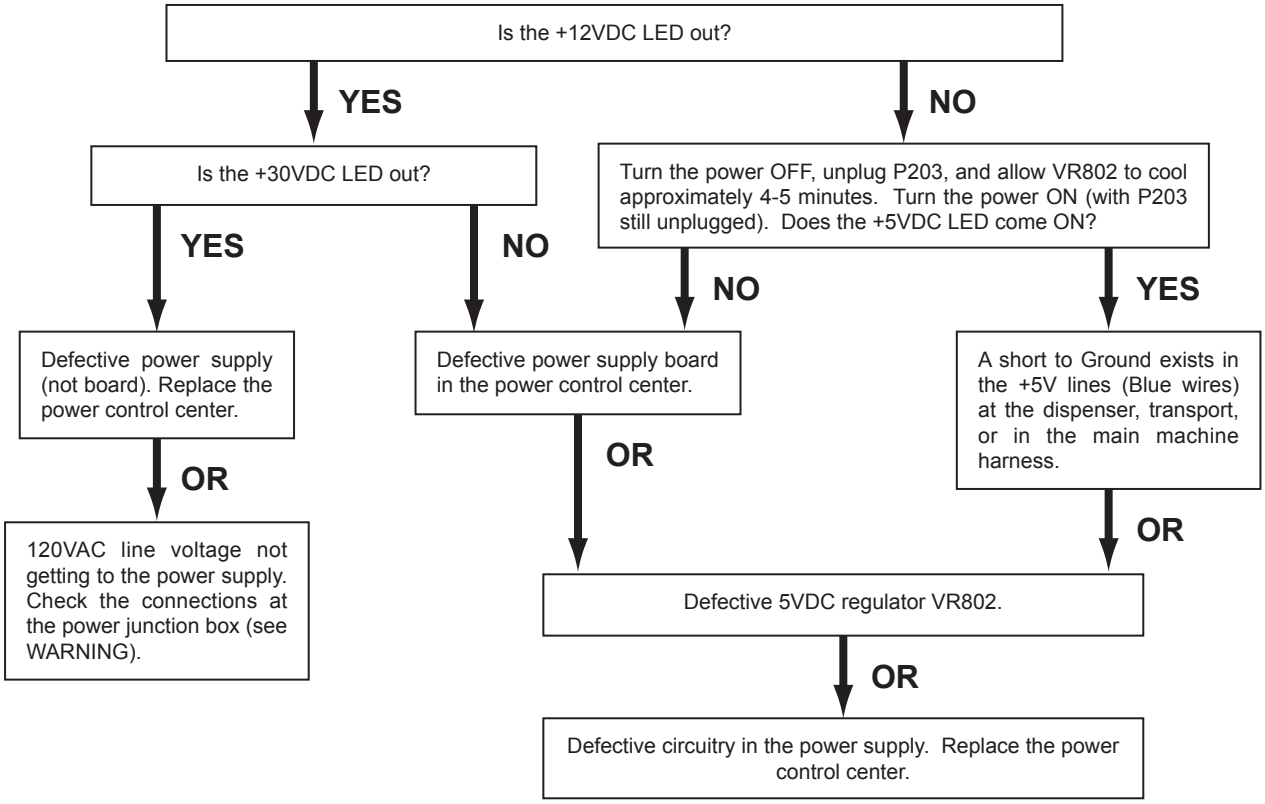

WARNING:

120 VAC circuitry. Turn the power OFF and pull the plug from the wall before making this check.

DETAILED CONTROL COMPUTER BOARD OPERATION

The following description is not intended for the casual repair person or the novice technician. It details the electronics found on the control computer board. No attempt should be made to repair this board unless you have had considerable experience troubleshooting and repairing complex, microprocessor-controlled electronic circuit boards. Rowe suggests that you send any defective CCC boards back to the factory for proper servicing.

Figure 4-5 is a four-sheet schematic of the 65077458 Changer Control Computer board. Sheet 1 shows the microprocessor, memory, and address decoding circuits. Sheet 2 shows the 16-character alphanumeric display and its control circuits. Sheet 3 shows the output interface circuits. Sheet 4 shows the input interface circuits.

Sheet 1: Control Computer

U20 is a 8097 microprocessor. It has eight channels of analog-to-digital conversion on it used to process analog signals coming from the transport. There are also a number of special high-speed input and output pins along with several I/O port pins. The CMOS version of the microprocessor (80C196) may be used in place of the NMOS 8097. When the CMOS version is used, the crystal frequency must change from 12 MHz to 3 MHz, and jumper J1 must be in the 1-2 position. J1 must be in the 2-3 position when the NMOS 8097 microprocessor is used.

CAUTION:

Damage to the microprocessor (V20) may result if the J1 jumper is installed wrong. Use position 1-2 for the CMOS 80C196 and position 2-3 for the NMOS 8097.

RESET CIRCUIT

The reset circuit is based on the U21, which is a low-voltage detector circuit. Voltage is applied to Pin 2 from the 5-volt regulator VR1. When the input voltage on Pin 2 reaches the proper level, the Reset output on Pin 1 goes HIGH. When Reset goes HIGH, U20 Pin 16 also goes HIGH, taking the processor out of reset. Reset also goes to the base of Q18, which controls RAM selection, battery power, and the switched 12-volt source.

With U21 Pin 1 LOW (RESET active), Q18 is OFF. R74 will pull down the base of Q9, Q17, and Q20, keeping all three turned OFF.

With Q9 OFF, the RAM chip select from U12A Pin 3 is blocked form reaching the RAM, U10. R73 pulls the RAM chip select up and keeps it deselected.

With Q17 OFF, Q15 stays OFF, allowing the battery voltage to be applied to the RAM. U10 Pins 26 and 28 through R150. The battery voltage will allow the RAM to retain its memory during RESET and whenever there is no power applied to the board.

With Q18 OFF, Q20 is kept OFF by R107, which in turn keeps Q13 OFF, which leaves the switched 12-volt supply OFF.

When U21 Pin 1 goes HIGH (RESET not active), Q18 supplies +5 volts to the bases of Q9, Q17, and Q18, turning each of them ON.

With Q9 ON, the RAM chip select form U12A Pin 3 is allowed to pass through Q9 and be applied to the RAM U10 Pin 20. When Q9 is ON, it effectively becomes transparent.

With Q17 ON, the base of Q15 is pulled down, turning on Q15. When Q15 is ON, the +5-volt supply is applied to the RAM U10 Pins 26 and 28 through Q15, relieving the battery.

With Q18 ON, voltage is applied to R157, providing a pull up for Q20. In this case, U20 Pin 30 through Q19 is the controlling factor. When U20 Pin 30 is HIGH, Q19 is turned ON, which keeps Q20 OFF, which in turn keeps Q13 and the switched 12-volt supply OFF. When U20 Pin 30 is LOW, Q19 turns OFF, allowing Q20 to turn ON through the pull up R157. This turns ON Q13 and the switched 12-volt supply.

I/O PORTS

U8 is an input buffer decoded by U13 at address C200 hex. This port reads the PROGRAMMING/NORMAL mode switch, all pushbutton switches, and the machine code information. When the processor reads memory locations C200, the information on the switches will be brought into the processor.

U19 is an input buffer decoded by U13 at address C600. This port reads the TEST switches, coin switches, and dispenser coin detectors. When the processor reads memory location C600, the information on these devices will be brought into the processor.

U5 is and output latch decoded by U13 at address C100 hex. U5 controls the hopper motors, the stacker, and coin lockout coil. The interface circuits for these functions are contained on sheet 3.

U16 is an RS485 interface chip allowing communication to test equipment and the Rowe BC programming aid.

U15 is an EPROM used to store information that must be kept, even if the battery voltage to the RAM dies. Original date of manufacture, programming information, and other things are stored in the EPROM.

Sheet 2: Digital Display Driver

DS1 is the vacuum fluorescent display. It normally requires a negative supply voltage to operate. The bill changer does not provide a negative supply, so the display tube and the display driver chip U1 are both "floating", that is, they do not have a direct ground reference. This effectively simulates a negative supply.

R17 through R22 provide level shifting of the display clock, data, and reset control lines. Each pair of resistors sets up a voltage divider, allowing the digital input signals on U14 to be level shifted to the voltages needed by U1.

When investigating this area, verify the proper voltages developed by the zener diodes. Referencing all measurements to ground, U1 Pin 1 should be +30 VDC, U1 Pin 18 should be +14 VDC, DS1 Pin 1 should be +6.2 VDC, and DS1 Pin 34 should be +11.8 VDC. Voltages on U1 Pins 20, 21, and 22 should swing between +30 VDC and +20 VDC.

Sheet 3: Output Circuits

All output circuits, except the transport transmissive/reflective LED driver circuit, are inactive when the switched +12 VDC supply is OFF. This keeps all the motors, solenoids, and coils in the machine from operating when the machine is turned ON and OFF, or whenever the RESET line from U21 is LOW.

TRANSPORT MOTOR CONTROL

The transport motor drive comes in to U6B Pin 3. U6B buffers the signal and inverts it through U11C, applying it to the base of Q5. the transport motor is a DC motor that runs on +12 volts. Motor speed is controlled by switching Q5 ON and OFF based on the transport motor drive signal. The transport drive signal is not a constant DC voltage applied to the base of Q5 but a switching signal. If the motor is running too fast, Q5 is turned OFF; if the motor is running too slow, Q5 is turned back ON.

The transport motor direction is controlled through relay K1. When the relay is in the normal de-energized position, as shown on the schematic, the motor will run in reverse when Q5 is turned ON. The transport motor runs in the forward direction when relay K1 is energized. The transport motor direction comes from the processor on Sheet 1 into Pin 5 of U6. It is inverted through U7, then applied to relay K1. Diode D2 suppresses back EMF from K1's coil as it de-energizes. D6 and D7 do the same thing for the motor coils when the motor is turned OFF.

HOPPER MOTOR CONTROL

All three hopper motor circuits operate in the same manner, so only the left motor circuit will be discussed.

A low at U11A Pin 1 causes Pin 16 to turn OFF. No current flows through the LED half of U4, so no gate current is provided to Q3. Without gate current, Q3 stays OFF, keeping the hopper motor OFF. When U11A Pin 1 goes HIGH, Pin 16 switches to ground, turning ON the LED in U4. Current flows in U4 Pins 4 and 6, supplying current to the base on Q3, turning Q3 ON. When Q3 is ON, the hopper motor will run.

WARNING:

The hopper motors run on 120 VAC and can cause severe electrical shock. Be very careful whenever you work with these circuits.

LED DRIVE

The LED drive signal controls the intensity of the reflective-transmissive LED in the transport. The light is similar to the transport motor in that it is not driven from a constant DC voltage, but is pulsed. If you look at the LED in the transport, it looks like it is on constant, but it is not. It is pulsing. By changing the duty cycle of the pulse, the brightness of the LED can be controlled.

OUT OF SERVICE LAMP

The OUT OF SERVICE lamp is controlled by the switched +12 VDC supply through U7G Pins 7 and 10. Whenever the switched +12 VDC supply is ON, the power control relay is energized and the OUT OF SERVICE lamp is OFF. Whenever the switched 12 VDC supply is turned OFF, the power control relay de-energizes and the OUT OF SERVICE lamp will be lit.

STACKER DRIVE

The stacker drive signal though U12D and U14E is applied to the stacker control board in the stacker. The stacker drive signal is a 200 ms pulse, just long enough to start the stacker motor and move it off its HOME switch.

DOLLAR COUNTER

The dollar counter is controlled by signals sent through U6D and U7F. A HIGH on U6D Pin 9 turns the counter ON while a LOW on U6D Pin 9 turns the counter OFF. The counter is pulsed 50 ms ON, 50 ms OFF when counting.

BUCKET DRIVE

All three bucket drive circuits operate in the same manner, so only the left bucket drive circuit will be discussed.

When the bucket circuit is OFF, U11D Pin 4 is LOW, U11D Pin 13 is open, so R106 keeps Q12 OFF. With Q12 OFF, R106 keeps Q8 OFF. When U11D Pin 4 goes HIGH, U11D Pin 13 goes LOW, turning ON Q12. Q12 supples base current to Q8, turning it ON, which turns ON the bucket coil.

STACKER SOLENOID

When the stacker solenoid is OFF, U6F Pin 13 is LOW, Pin 12 will also be LOW, keeping Q4 OFF. When U6F Pin 13 goes HIGH, Pin 12 will open, allowing base current to Q4 through R83, turning Q4 ON, which turns ON the stacker solenoid in the stacker. The solenoid controls the flipper which determines whether the bill gets stacked in the upper or lower box.

COIN LOCKOUT

The coin lockout is controlled by signals sent through U6A and U7E. A HIGH on U6A Pin 1 turns the coin lockout ON, while a LOW on U6A Pin 1 turns the coin lockout OFF. When the coin lockout is ON, coins may pass through the coin acceptor to the coins switches.

Sheet 4: Input Circuits

Most of the input circuits are straightforward. A series resistor, usually 100 ohms or 1 K-ohms, and either a .01 or .1 microfarad capacitor to ground provide a little noise filtering. Several inputs have pull up resistors.

Seven inputs from P4 are connected to A/D conversion inputs on the processor. All the other inputs are digital signals. The circuits involving U17A, U17B, Q14, and Q16 convert analog inputs to digital signals.

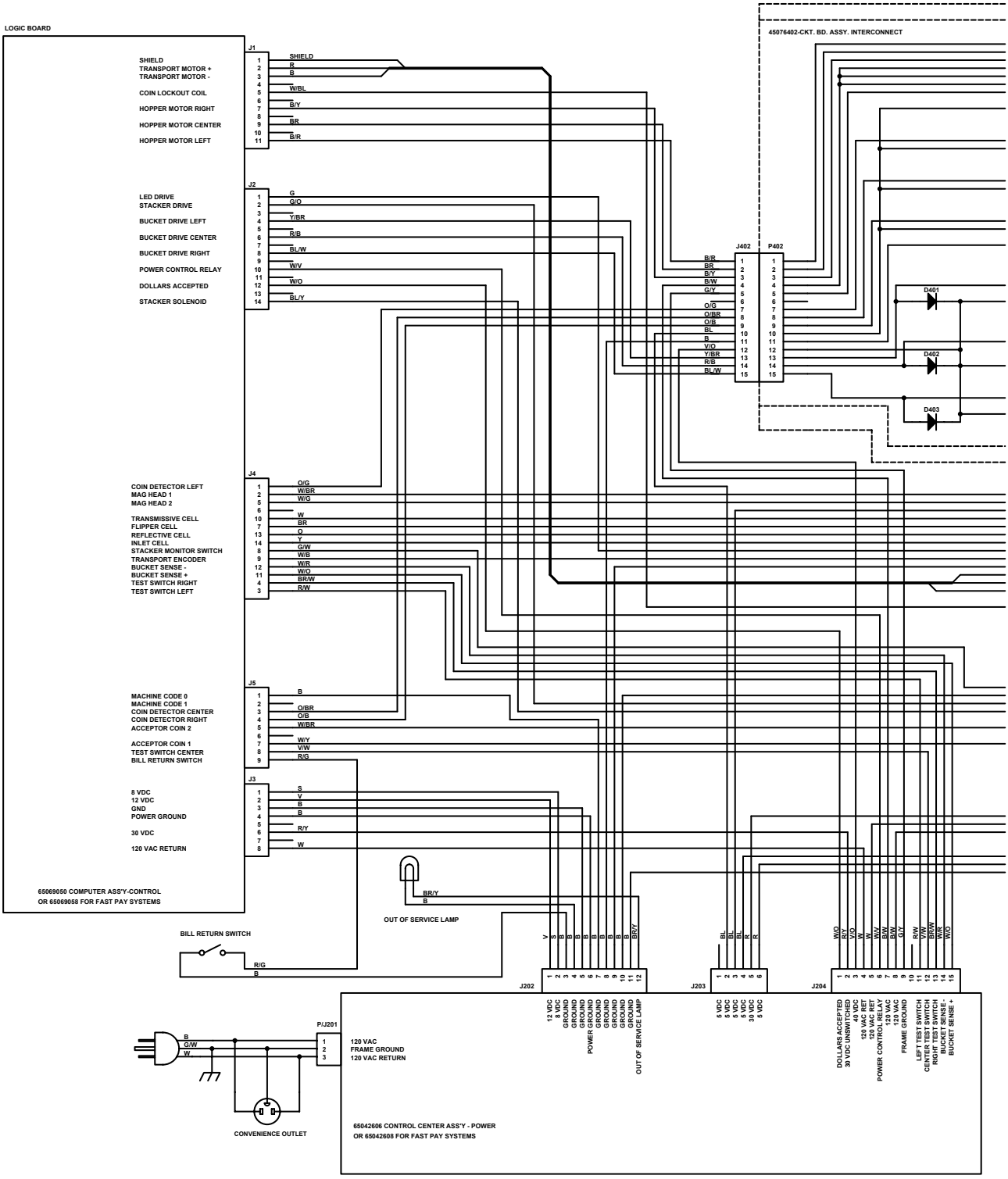
LOGIC BOARD
J1
SHIELD
TRANSPORT MOTOR +
TRANSPORT MOTOR -
COIN LOCKOUT COIL
HOPPER MOTOR RIGHT
HOPPER MOTOR CENTER
HOPPER MOTOR LEFT
J2
LED DRIVE
STACKER DRIVE
BUCKET DRIVE LEFT
BUCKET DRIVE CENTER
BUCKET DRIVE RIGHT
POWER CONTROL RELAY
DOLLARS ACCEPTED
STACKER SOLENOID
J4
COIN DETECTOR LEFT
MAG HEAD 1
MAG HEAD 2
TRANSMISSIVE CELL
FLIPPER CELL
REFLECTIVE CELL
INLET CELL
STACKER MONITOR SWITCH
TRANSPORT ENCODER
BUCKET SENSE -
BUCKET SENSE +
TEST SWITCH RIGHT
TEST SWITCH LEFT
J5
MACHINE CODE 0
MACHINE CODE 1
COIN DETECTOR CENTER
COIN DETECTOR RIGHT
ACCEPTOR COIN 2
ACCEPTOR COIN 1
TEST SWITCH CENTER
BILL RETURN SWITCH
J3
8 VDC
12 VDC
GND
POWER GROUND
30 VDC
120 VAC RETURN
65069050 COMPUTER ASS'Y-CONTROL
OR 65069058 FOR FAST PAY SYSTEMS
45076402-CKT. BD. ASSY. INTERCONNECT
J402
P402
D401
D402
D403
BILL RETURN SWITCH
OUT OF SERVICE LAMP
J202
J203
J204
P/J201
120 VAC
FRAME GROUND
120 VAC RETURN
CONVENIENCE OUTLET
65042606 CONTROL CENTER ASS'Y - POWER
OR 65042608 FOR FAST PAY SYSTEMS

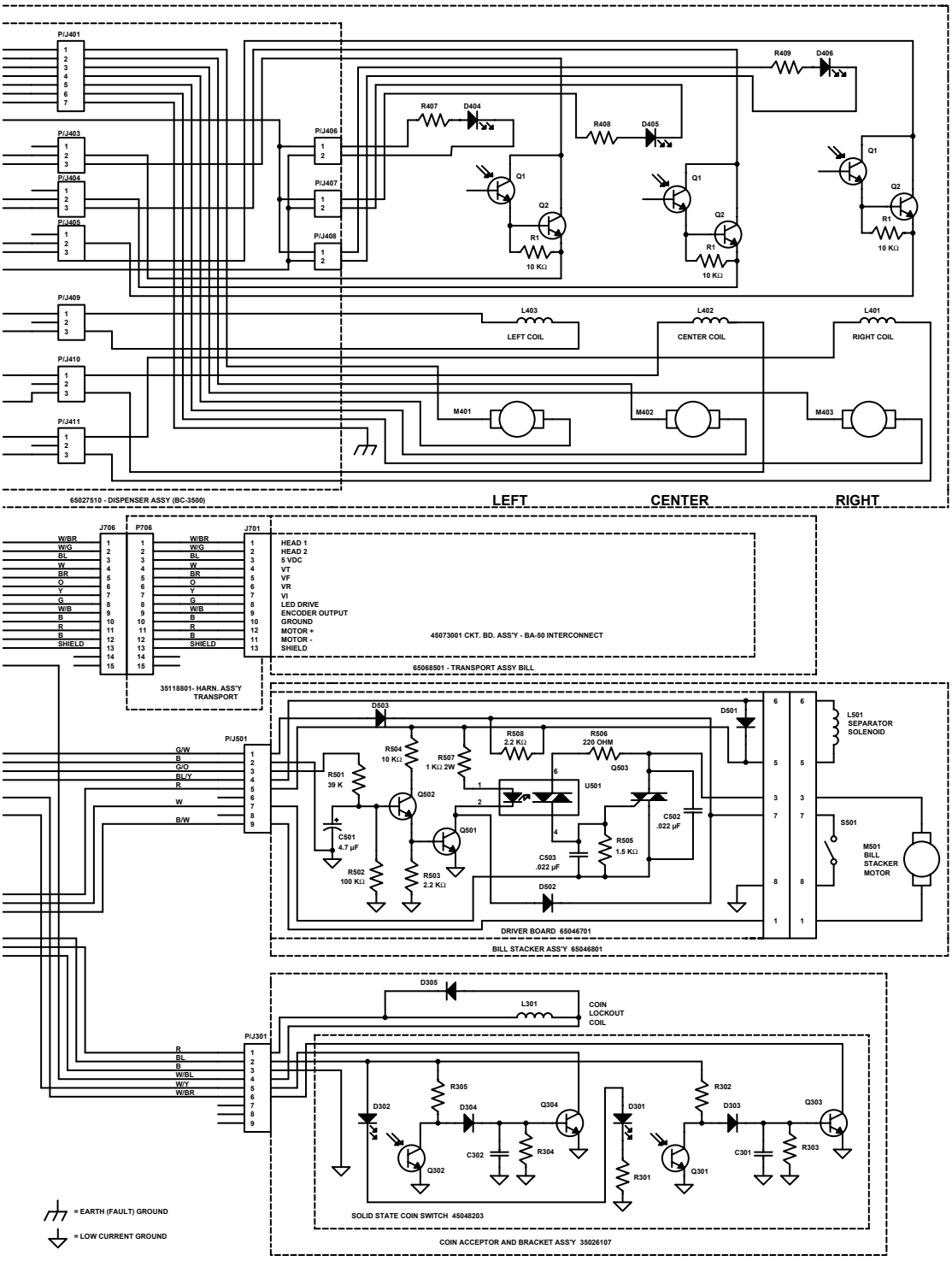

Figure 4-1. BC-3500 Schematic Diagram

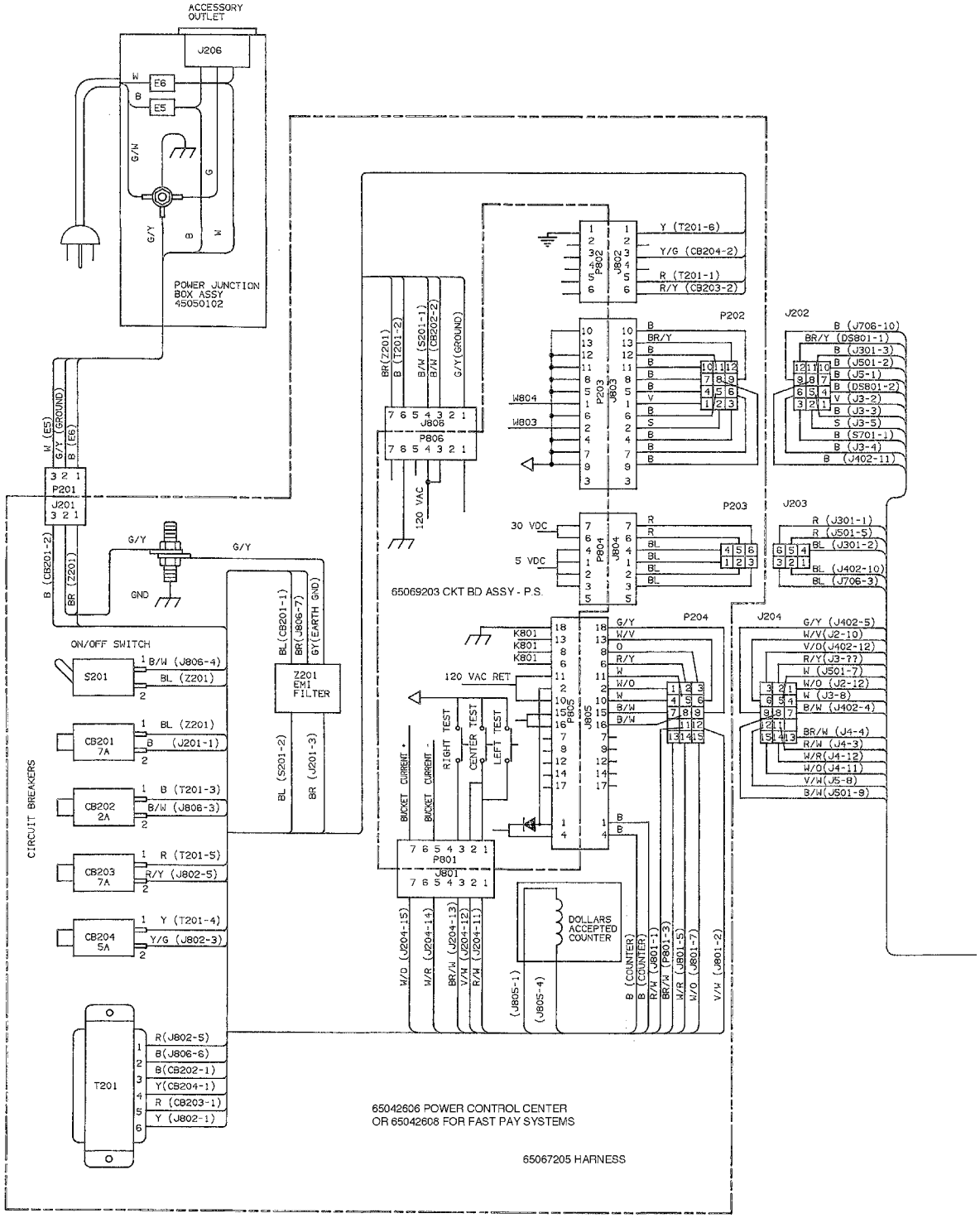
ACCESSORY OUTLET
J206
E6
E5
POWER JUNCTION BOX ASSY 45050102
P201
J201
ON/OFF SWITCH
S201
CB201 7A
CB202 2A
CB203 7A
CB204 5A
CIRCUIT BREAKERS
Z201 EMI FILTER
T201
GND
120 VAC
120 VAC RET
30 VDC
5 VDC
65069203 CKT BD ASSY - P.S.
P801
P802
P803
P804
P805
P806
P202
P203
P204
J202
J203
J204
J801
J802
J803
J804
J805
J806
RIGHT TEST
CENTER TEST
LEFT TEST
BUCKET CURRENT +
BUCKET CURRENT -
DOLLARS ACCEPTED COUNTER
65042606 POWER CONTROL CENTER
OR 65042608 FOR FAST PAY SYSTEMS
65067205 HARNESS

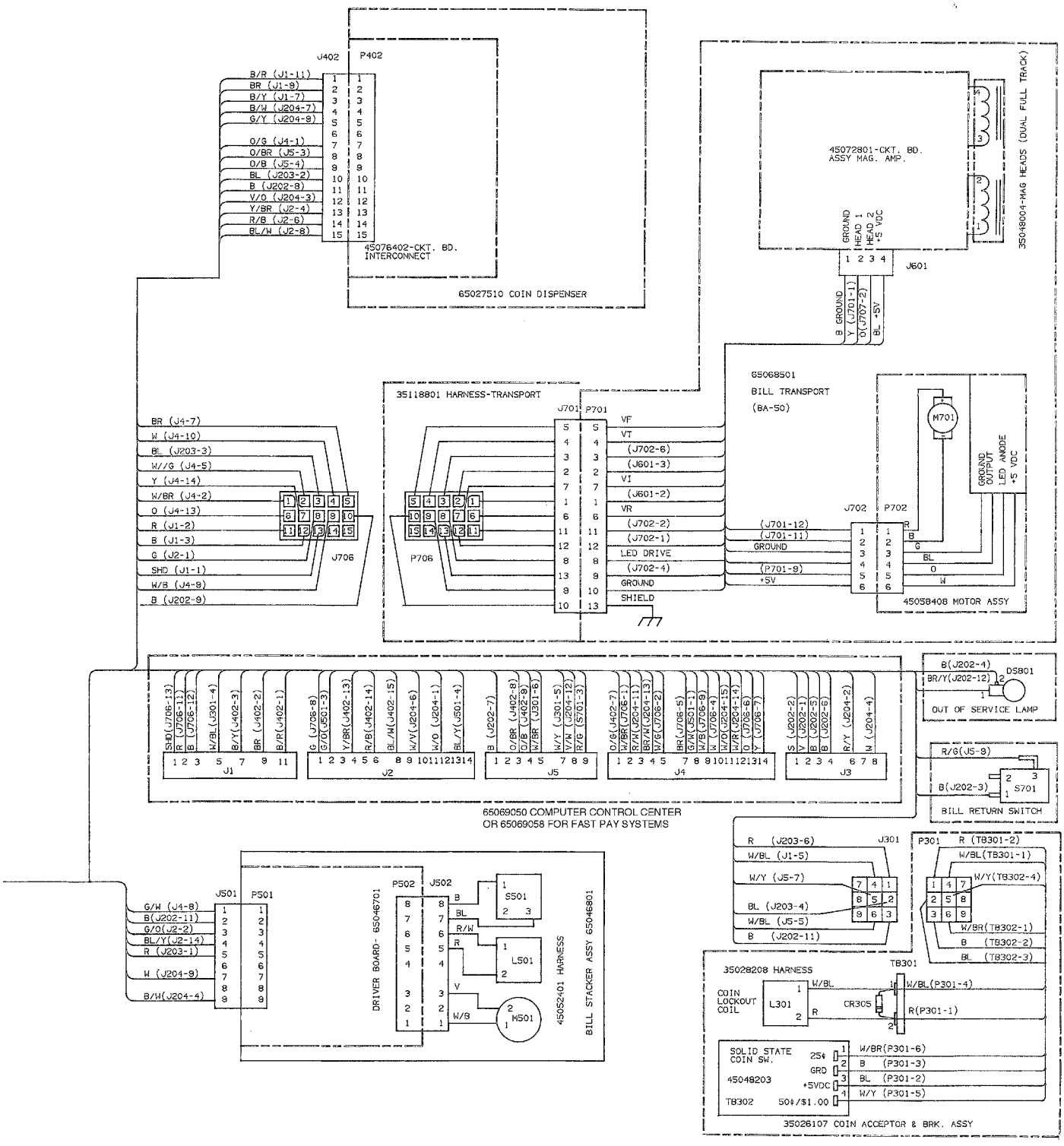

Figure 4-1. BC-3500 Wiring Diagram

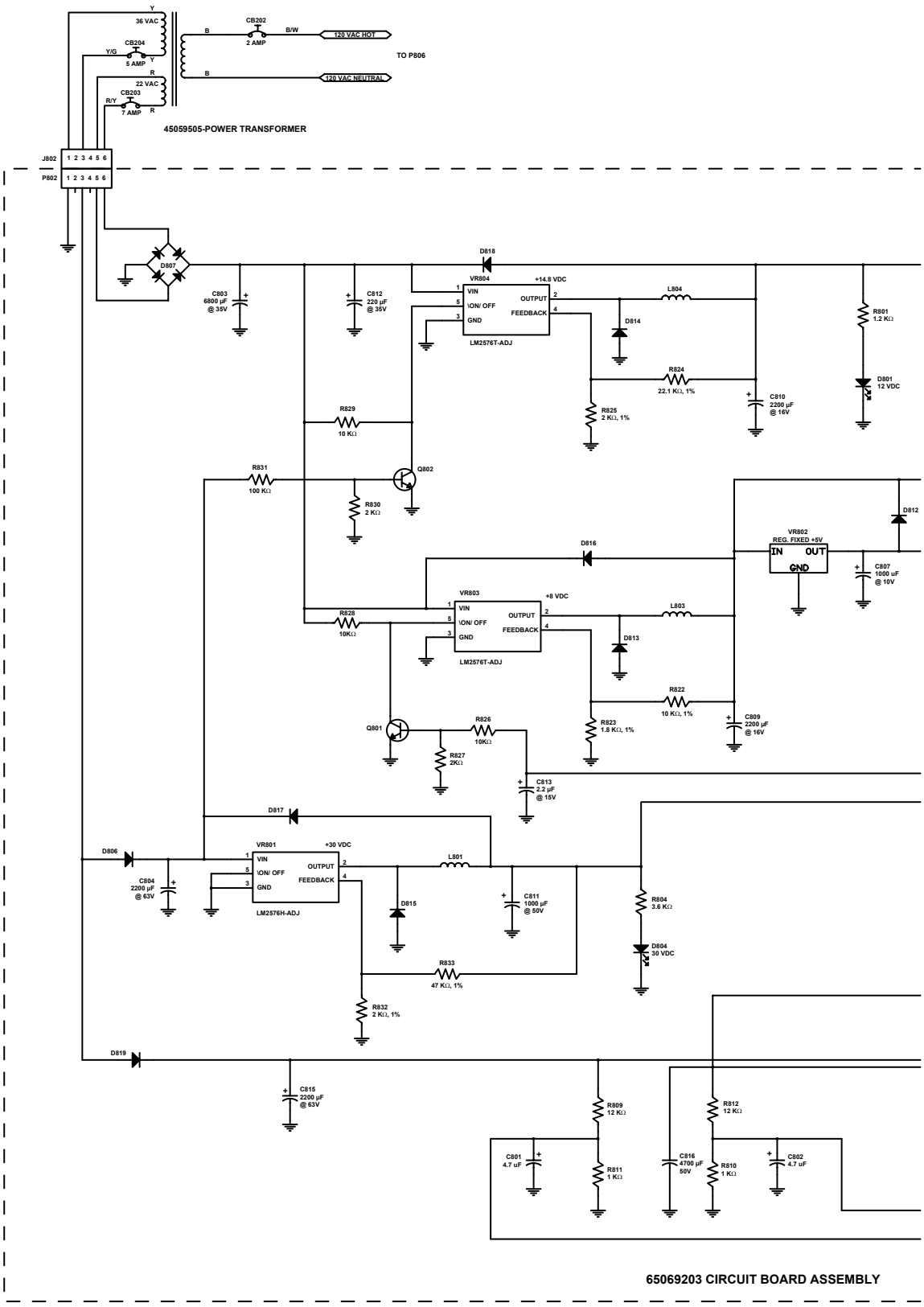
Y
36 VAC
CB202
2 AMP
B
B/W
120 VAC HOT
TO P806
CB204
Y/G
5 AMP
Y
R
B
120 VAC NEUTRAL
22 VAC
CB203
R/Y
7 AMP
R
45059505-POWER TRANSFORMER
J802 1 2 3 4 5 6
P802 1 2 3 4 5 6
D807
D818
VR804
+14.8 VDC
VIN
ON/ OFF
GND
OUTPUT
FEEDBACK
LM2576T-ADJ
C803 6800 µF @ 35V
C812 220 µF @ 35V
L804
D814
R824 22.1 KΩ, 1%
R825 2 KΩ, 1%
C810 2200 µF @ 16V
R801 1.2 KΩ
D801 12 VDC
R829 10 KΩ
R831 100 KΩ
Q802
R830 2 KΩ
D812
VR802
REG. FIXED +5V
IN OUT GND
C807 1000 uF @ 10V
D816
VR803
+8 VDC
R828 10KΩ
L803
D813
R822 10 KΩ, 1%
R823 1.8 KΩ, 1%
C809 2200 µF @ 16V
Q801
R826 10KΩ
R827 2KΩ
C813 2.2 µF @ 15V
D817
D806
VR801
+30 VDC
C804 2200 µF @ 63V
L801
D815
C811 1000 µF @ 50V
R804 3.6 KΩ
D804 30 VDC
R833 47 KΩ, 1%
R832 2 KΩ, 1%
D819
C815 2200 µF @ 63V
R809 12 KΩ
R812 12 KΩ
C801 4.7 uF
R811 1 KΩ
C816 4700 µF 50V
R810 1 KΩ
C802 4.7 uF
65069203 CIRCUIT BOARD ASSEMBLY

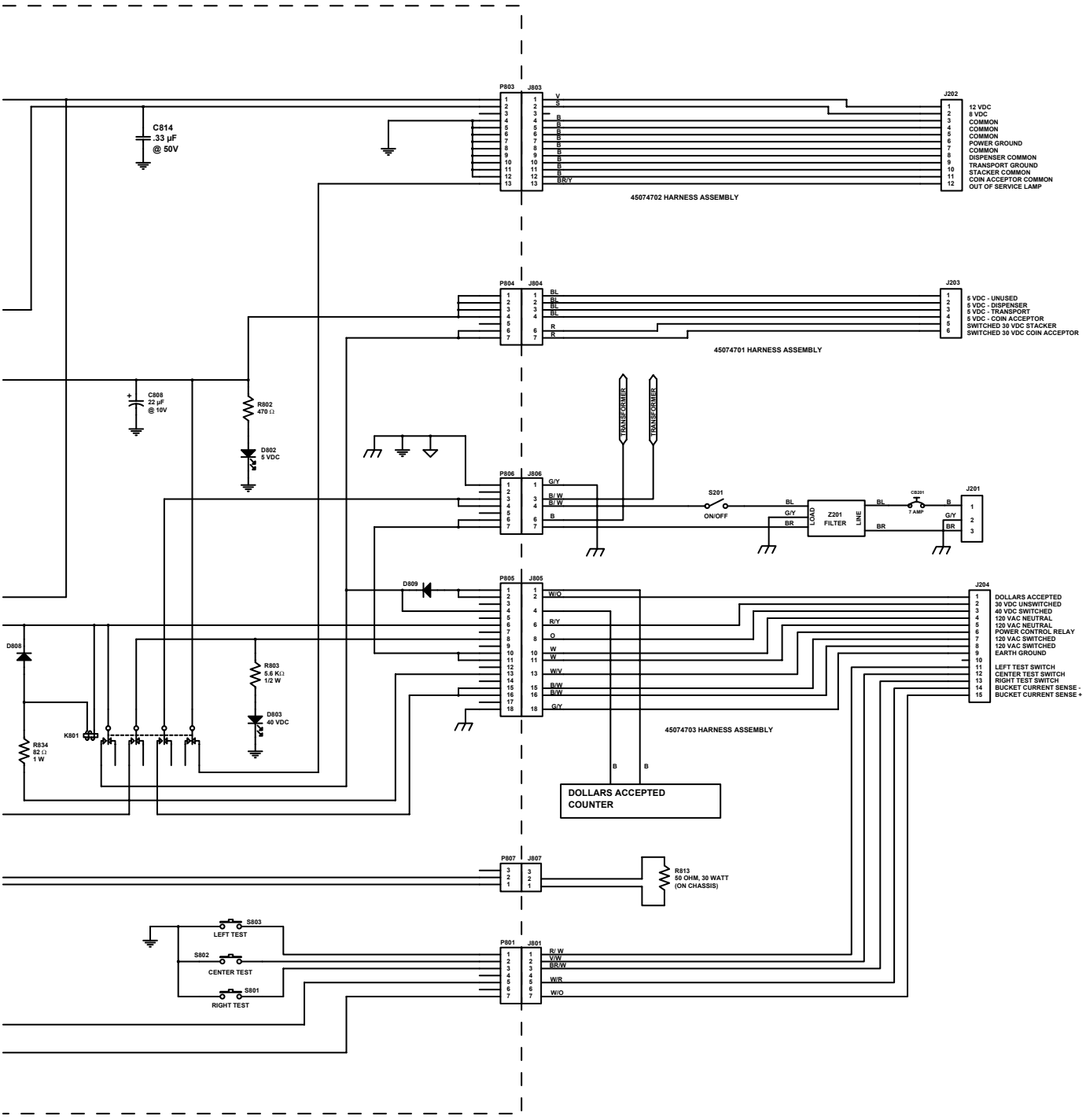

Figure 4-2. Schematic Diagram - Power Supply

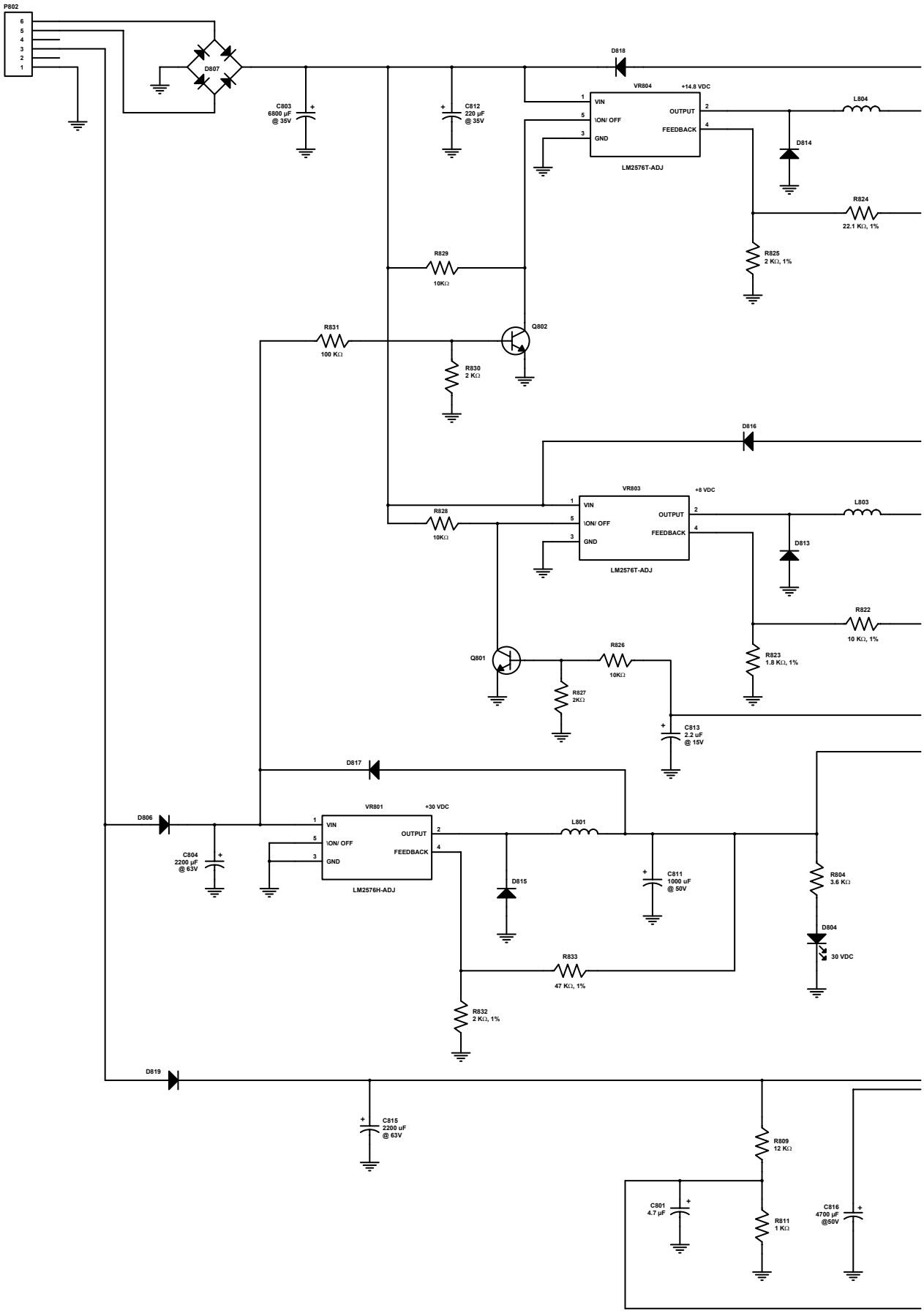
P802
6
5
4
3
2
1
D807
C803
6800 µF
@ 35V
C812
220 µF
@ 35V
D818
VR804
+14.8 VDC
VIN
\ON/ OFF
GND
OUTPUT
FEEDBACK
LM2576T-ADJ
L804
D814
R824
22.1 KΩ, 1%
R825
2 KΩ, 1%
R829
10KΩ
R831
100 KΩ
Q802
R830
2 KΩ
D816
VR803
+8 VDC
R828
10KΩ
L803
D813
LM2576T-ADJ
R822
10 KΩ, 1%
R823
1.8 KΩ, 1%
Q801
R826
10KΩ
R827
2KΩ
C813
2.2 uF
@ 15V
D817
D806
VR801
+30 VDC
C804
2200 µF
@ 63V
LM2576H-ADJ
L801
D815
C811
1000 uF
@ 50V
R804
3.6 KΩ
D804
30 VDC
R833
47 KΩ, 1%
R832
2 KΩ, 1%
D819
C815
2200 uF
@ 63V
R809
12 KΩ
C801
4.7 µF
R811
1 KΩ
C816
4700 µF
@50V

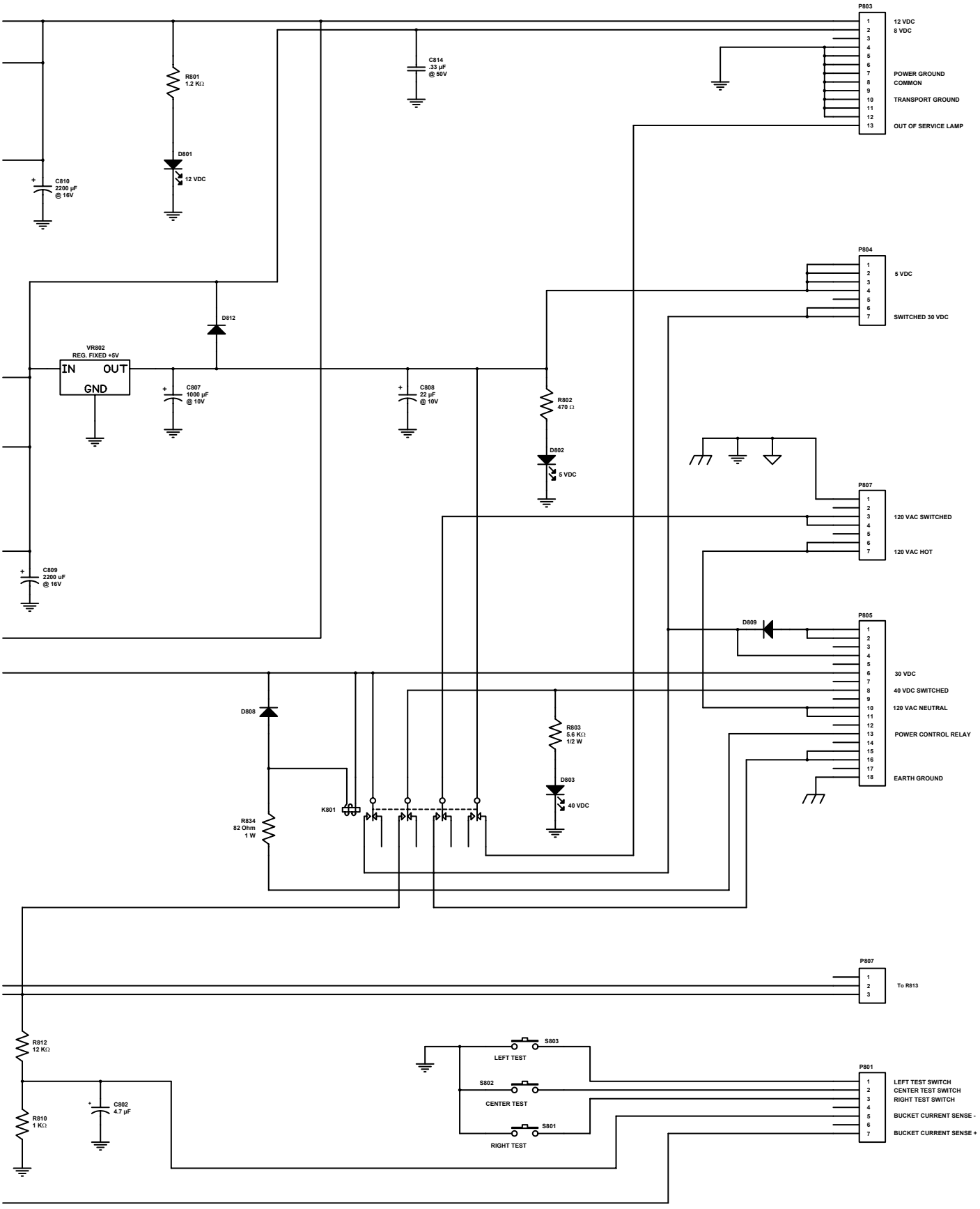

Figure 4-2. Schematic Diagram - Power Supply

Power Supply Circuit Board Assembly - 65069203 (Rev. A)

C801	Capacitor - Electrolytic 50 VDC	4.7 µF	70023806
C802	Capacitor - Electrolytic 50 VDC	4.7 µF	70023806
C803	Capacitor - Electrolytic 35 VDC	6800 µF	70023601
C804	Capacitor - Electrolytic 63 VDC	2200 µF	70023610
C807	Capacitor - Electrolytic 10 VDC	1000 µF	70028117
C808	Capacitor - Tantalum 16 VDC	2200 µF	70025104
C809	Capacitor - Electrolytic 16 VDC	2200 µF	70028311
C810	Capacitor - Electrolytic 16 VDC	2200 µF	70028311
C811	Capacitor - Electrolytic 50 VDC	1000 µF	70028309
C812	Capacitor - Electrolytic 50 VDC	220 µF	70028305
C813	Capacitor - Tantalum 20 VDC	2.2 µF	70025107
C814	Capacitor - Mylar 100 VDC	.33 µF	70021555
C815	Capacitor - Electrolytic 63 VDC	2200 µF	70023610
C816	Capacitor - Electrolytic 50 VDC	4700 µF	70023604
D801	Diode - Light Emitting (Red)	90°	70035201
D802	Diode - Light Emitting (Red)	90°	70035201
D803	Diode - Light Emitting (Red)	90°	70035201
D804	Diode - Light Emitting (Red)	90°	70035201
D806	Diode - Silicon	MR752	70035010
D807	Diode Bridge		21822506
D808	Diode - Silicon	1N4004	70035005
D809	Diode - Silicon	1N4004	70035005
D812	Diode - Silicon	1N4004	70035005
D813	Diode - Silicon	MR820	70035017
D814	Diode - Silicon	MR820	70035017
D815	Diode - Silicon	MR820	70035017
D816	Diode - Silicon	1N4004	70035005
D817	Diode - Silicon	1N4004	70035005
D818	Diode - Silicon	1N4004	70035005
D819	Diode - Silicon	MR752	70035010
K801	Relay - Power		35066802
L801	Inductor	200 µH	21513502
L803	Inductor	200 µH	21513502
L804	Inductor	200 µH	21513502
P801	Header - Polarized	7 Circuit	70075007
P802	Header - Polarized	6 Circuit	70075006
P803	Header - Polarized	13 Circuit	70075013
P804	Header - Polarized	7 Circuit	70075007
P805	Header - Polarized	18 Circuit	70075018
P806	Header - Polarized	7 Circuit	70075007
P807	Header - Polarized	3 Circuit	70075003

Q801	Transistor - NPN	MPSA06	70030008
Q802	Transistor - NPN	MPSA06	70030008

Note: All resistors are ¼ watt 5%, unless otherwise noted.

R801	Resistor - Carbon Film	1.2 kΩ	79901122
R802	Resistor - Carbon Film	470 Ω	79901471
R803	Resistor - Carbon Film 1/2 W 5%	5.6 kΩ	79904562
R804	Resistor - Carbon Film	3.6 kΩ	79901362
R809	Resistor - Carbon Film	12 kΩ	79901123
R810	Resistor - Carbon Film	1 kΩ	79901102
R811	Resistor - Carbon Film	1 kΩ	79901102
R812	Resistor - Carbon Film	12 kΩ	79901123
R822	Resistor - Carbon Film 1/4 W 5%	10 kΩ	799121002
R823	Resistor - Carbon Film 1/4 W 5%	1.8 kΩ	799121801
R824	Resistor - Carbon Film 1/4 W 5%	22.1 kΩ	799122212
R825	Resistor - Carbon Film 1/4 W 5%	2 kΩ	799122001
R826	Resistor - Carbon Film	10 kΩ	79901103
R827	Resistor - Carbon Film	2 kΩ	79901202
R828	Resistor - Carbon Film	10 kΩ	79901103
R829	Resistor - Carbon Film	18 kΩ	79901183
R830	Resistor - Carbon Film	2 kΩ	79901202
R831	Resistor - Carbon Film	100 kΩ	79901104
R832	Resistor - Carbon Film 1/4 W 5%	2 kΩ	799122001
R833	Resistor - Carbon Film 1/4 W 5%	47 kΩ	799124702
R834	Resistor - Carbon Film 1 W	82 Ω	70010825

S801	Switch Pushbutton		21637902
S802	Switch Pushbutton		21637902
S803	Switch Pushbutton		21637902

VR801	I.C. - Voltage Regulator	LM2576T-ADJ (HV)	70036525
VR802	I.C. - Voltage Regulator	LM340T5	70036506
VR803	I.C. - Voltage Regulator	LM2576T-ADJ	70036520
VR804	I.C. - Voltage Regulator	LM2576T-ADJ	70036520

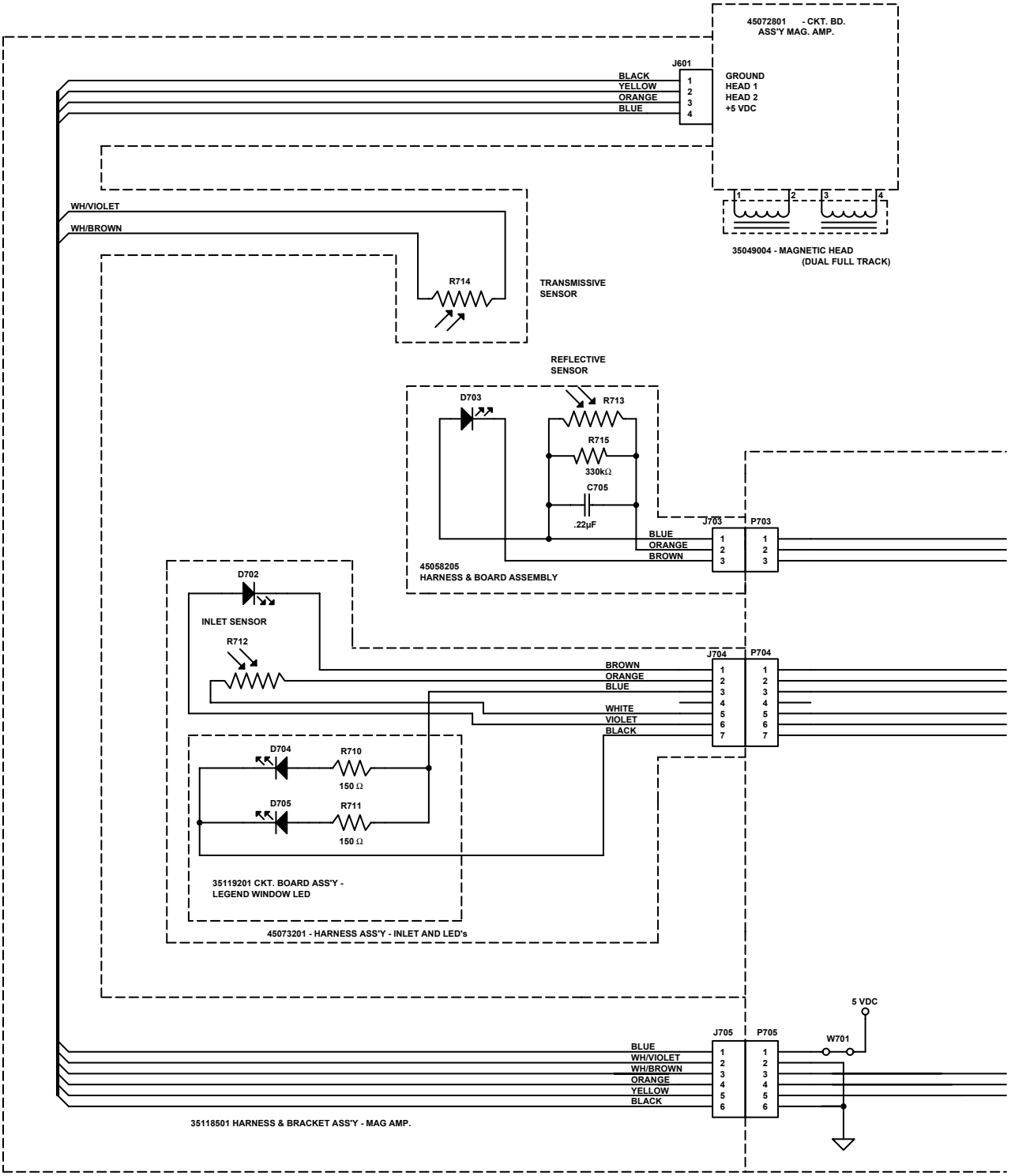
45072801 - CKT. BD.
ASS'Y MAG. AMP.
J601
BLACK
YELLOW
ORANGE
BLUE
GROUND
HEAD 1
HEAD 2
+5 VDC
1
2
3
4
35049004 - MAGNETIC HEAD
(DUAL FULL TRACK)
WH/VIOLET
WH/BROWN
R714
TRANSMISSIVE
SENSOR
REFLECTIVE
SENSOR
D703
R713
R715
330kΩ
C705
.22µF
J703
P703
BLUE
ORANGE
BROWN
45058205
HARNESS & BOARD ASSEMBLY
D702
INLET SENSOR
R712
J704
P704
BROWN
ORANGE
BLUE
WHITE
VIOLET
BLACK
D704
R710
150 Ω
D705
R711
150 Ω
35119201 CKT. BOARD ASS'Y -
LEGEND WINDOW LED
45073201 - HARNESS ASS'Y - INLET AND LED's
5 VDC
W701
J705
P705
BLUE
WH/VIOLET
WH/BROWN
ORANGE
YELLOW
BLACK
35118501 HARNESS & BRACKET ASS'Y - MAG AMP.

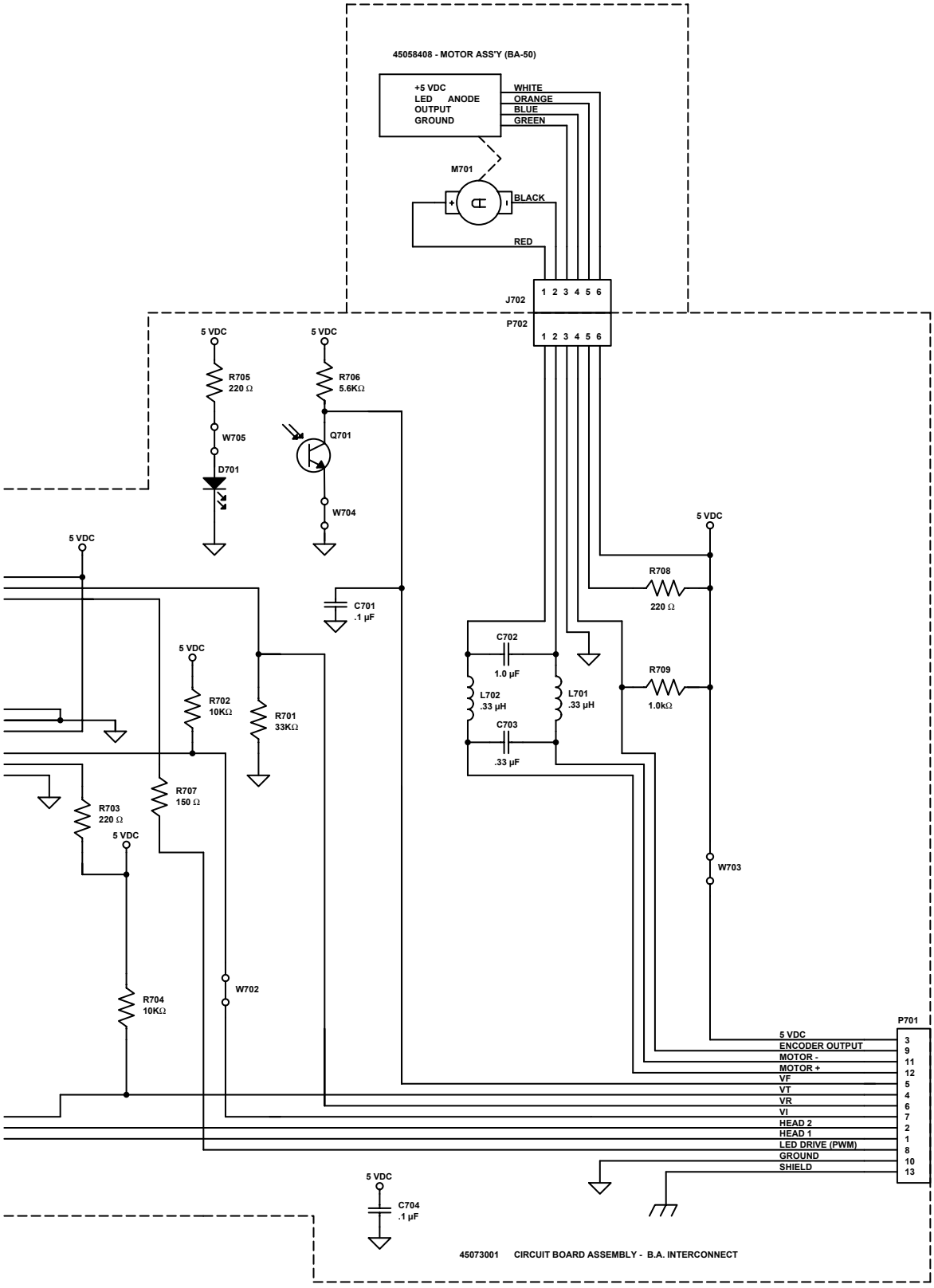

Figure 4-3. Schematic Diagram - BA-50 Transport

Interconnect Circuit Board Assembly - 45073001 (Rev. D)

C701	Capacitor - Ceramic 50 VDC	.1 µF	70028511
C702	Capacitor - Mylar 100 VDC	1.0 µF	70021561
C703	Capacitor - Mylar 100 VDC	.33 µF	70021555
C704	Capacitor - Ceramic 50 VDC	.1 µF	70028511
D701	Sensor LED Pair - Infrared		70033501
L701	Inductor RF	.33 µH	70041502
L702	Inductor RF	.33 µH	70041502
P701	Header - 90 Degree	13 Pin	70074413
P802	Header - Straight	6 Pin	70074306
P803	Header - Straight	3 Pin	70074303
P804	Header - Straight	7 Pin	70074307
P805	Header - Straight	6 Pin	70074306
Q701	Sensor LED Pair - Infrared (see D701)		

Note: All resistors are ¼ watt 5%, unless otherwise noted.

R701	Resistor - Carbon Film	33 kΩ	79901333
R802	Resistor - Carbon Film	10 Ω	79901103
R803	Resistor - Carbon Film	220 Ω	79901221
R804	Resistor - Carbon Film	10 kΩ	79901103
R805	Resistor - Carbon Film	220 Ω	79901221
R806	Resistor - Carbon Film	5.6 kΩ	79901562
R807	Resistor - Carbon Film	150 Ω	79901151
R808	Resistor - Carbon Film	220 Ω	79901221
R809	Resistor - Carbon Film	1.0 kΩ	79901102

This page intentionally left blank.

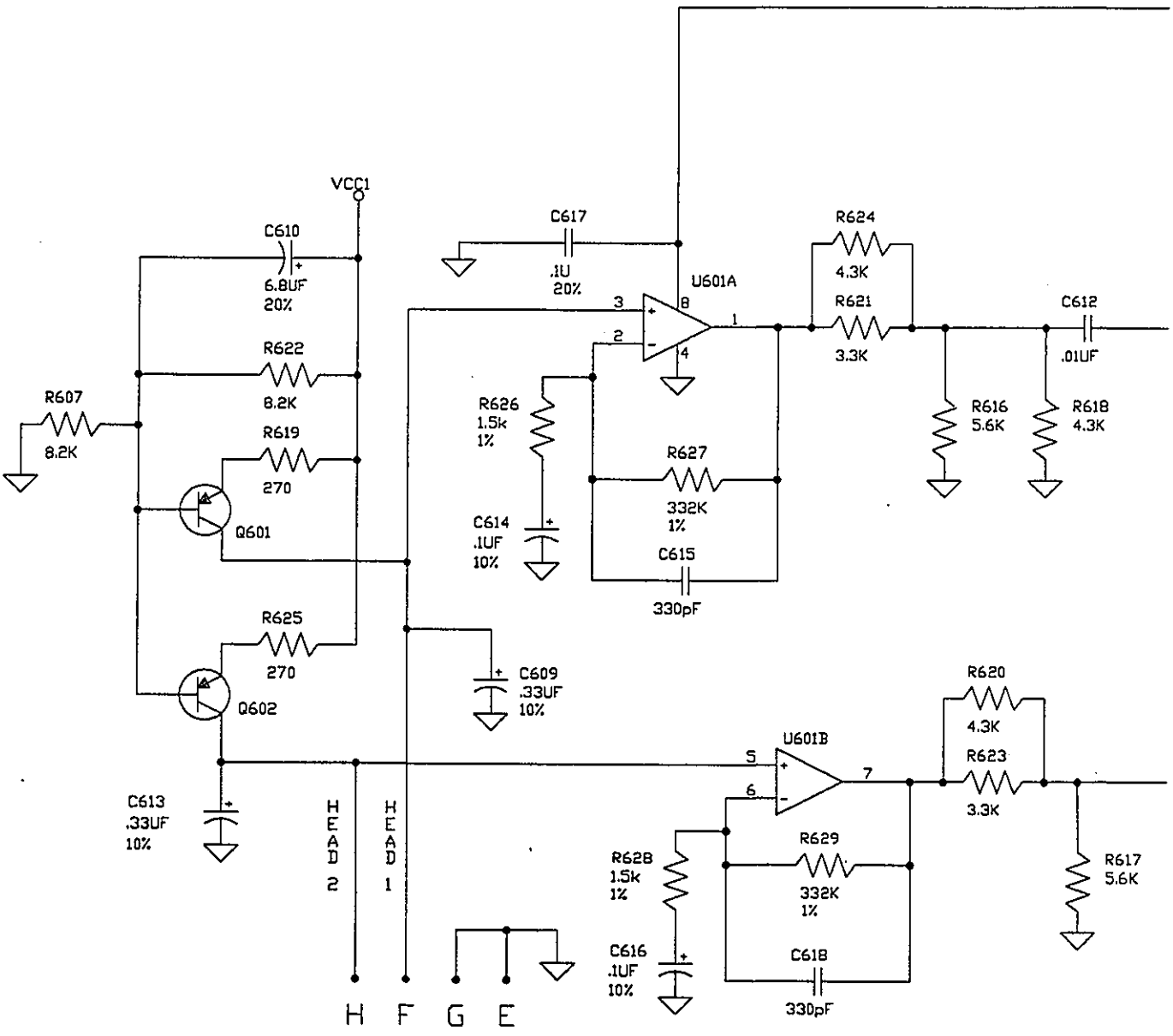
VCC1
C610
6.8UF
20%
R622
8.2K
R607
8.2K
R619
270
Q601
R625
270
Q602
C613
.33UF
10%
C617
.1U
20%
U601A
3
2
8
1
4
R624
4.3K
R621
3.3K
C612
.01UF
R626
1.5k
1%
R627
332K
1%
C614
.1UF
10%
C615
330pF
R616
5.6K
R618
4.3K
C609
.33UF
10%
U601B
5
6
7
R620
4.3K
R623
3.3K
R628
1.5k
1%
R629
332K
1%
C616
.1UF
10%
C618
330pF
R617
5.6K
HEAD 2
HEAD 1
H
F
G
E

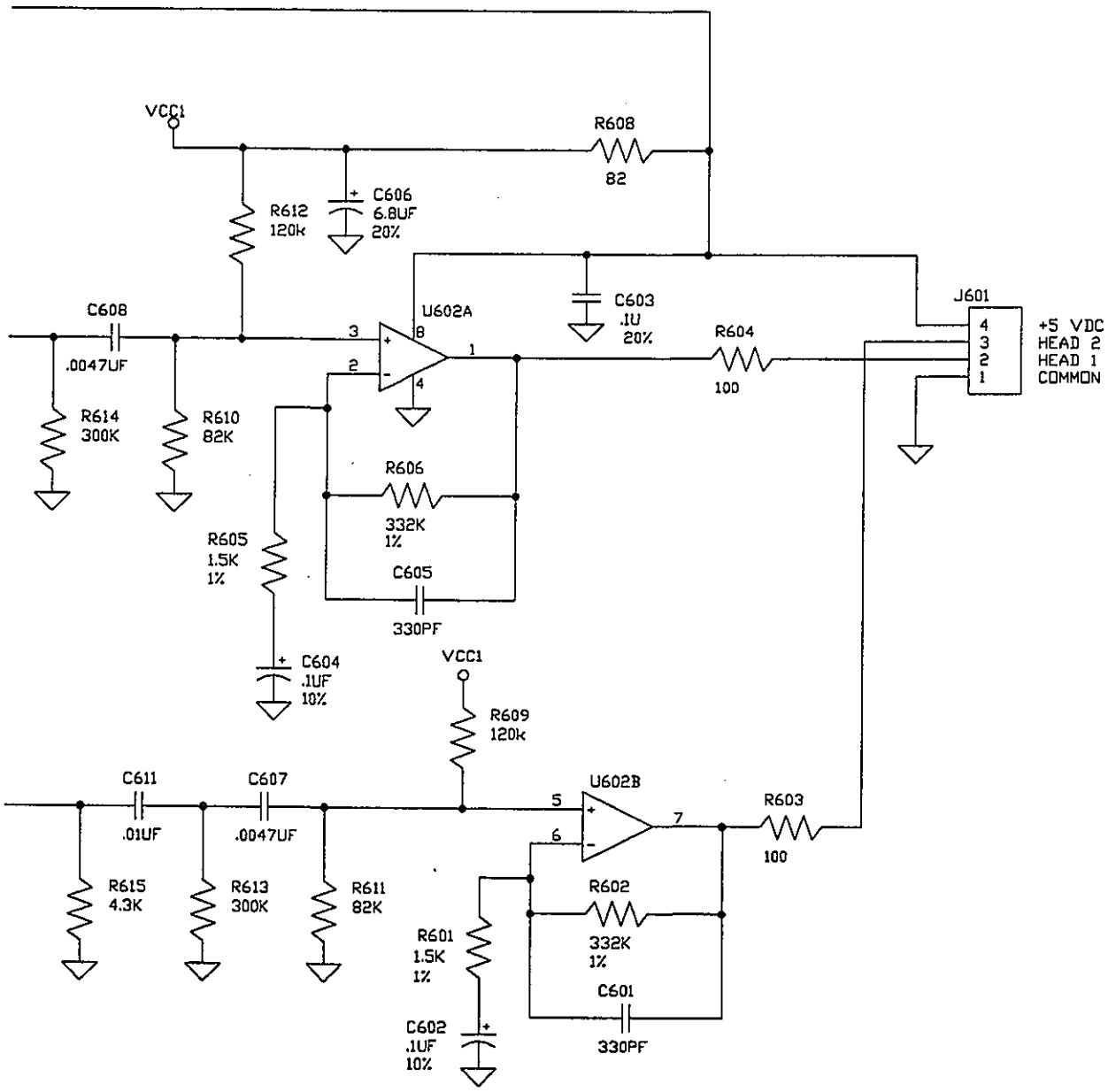

Figure 4-4. Schematic Diagram - Magnetic Amplifier Board

Magnetic Amplifier Circuit Board 45072801 (Rev. E)

NOTE:

This components list is intended as a troubleshooting aid only. Rowe does not recommend replacement of any magnetic amplifier circuit board components. Replacing components on this circuit board may damage the magnetic head.

C601	Capacitor - Ceramic 50 VDC 5%	330 pF	70028837
C602	Capacitor - Tantalum 16 VDC 10%	.1 µF	70025201
C603	Capacitor - Ceramic 50 VDC 5%	.1 µF	70028966
C604	Capacitor - Tantalum 16 VDC 10%	.1 µF	70025201
C605	Capacitor - Ceramic 50 VDC 5%	330 pF	70028837
C606	Capacitor - Tantalum 16 VDC 20%	6.8 µF	70025203
C607	Capacitor - Ceramic 50 VDC 5%	.0047 µF	70025203
C608	Capacitor - Ceramic 50 VDC 5%	.0047 µF	70025203
C609	Capacitor - Tantalum 16 VDC 10%	.33 µF	70025202
C610	Capacitor - Tantalum 16 VDC 20%	6.8 µF	70025203
C611	Capacitor - Ceramic 50 VDC 5%	.01 pF	70028941
C612	Capacitor - Ceramic 50 VDC 5%	.01 pF	70028941
C613	Capacitor - Tantalum 16 VDC 10%	.33 µF	70025202
C614	Capacitor - Tantalum 16 VDC 10%	.1 µF	70025201
C615	Capacitor - Ceramic 50 VDC 5%	330 pF	70028837
C616	Capacitor - Tantalum 16 VDC 10%	.1 µF	70025201
C617	Capacitor - Ceramic 50 VDC 5%	.1 µF	70028966
C618	Capacitor - Ceramic 50 VDC 5%	330 pF	70028837
J601	Polarizing Wafer (90°)	4 Position	70074404
Q601	Transistor - PNP		70030106
Q602	Transistor - PNP		70030106

Note: All resistors are ¼ watt 5%, unless otherwise noted.

R601	Resistor - Carbon Film 1/8 W 1%	1.5 kΩ	799101501
R602	Resistor - Carbon Film 1/8 W 1%	332 kΩ	799103323
R603	Resistor - Carbon Film	100 Ω	79911101
R604	Resistor - Carbon Film	100 Ω	79911101
R605	Resistor - Carbon Film 1/8 W 1%	1.5 kΩ	799101501
R606	Resistor - Carbon Film 1/8 W 1%	332 kΩ	799103323
R607	Resistor - Carbon Film	8.2 kΩ	79911822
R608	Resistor - Carbon Film	82 Ω	79911820
R609	Resistor - Carbon Film	120 kΩ	79911124
R610	Resistor - Carbon Film	82 Ω	79911823
R611	Resistor - Carbon Film	82 Ω	79911823
R612	Resistor - Carbon Film	120 kΩ	79911124
R613	Resistor - Carbon Film	300 kΩ	79911304
R614	Resistor - Carbon Film	300 kΩ	79911304
R615	Not Used		
R616	Resistor - Carbon Film	5.6 kΩ	79911562
R617	Resistor - Carbon Film	5.6 kΩ	79911562
R618	Resistor - Carbon Film	4.3 kΩ	79911432
R619	Resistor - Carbon Film	270 Ω	79911271
R620	Resistor - Carbon Film	4.3 kΩ	79911432
R621	Resistor - Carbon Film	3.3 kΩ	79911332
R622	Resistor - Carbon Film	8.2 kΩ	79911822
R623	Resistor - Carbon Film	3.3 kΩ	79911332
R624	Resistor - Carbon Film	4.3 kΩ	79911432
R625	Resistor - Carbon Film	270 Ω	79911271
R626	Resistor - Carbon Film 1/8 W 1%	1.5 kΩ	799101501
R627	Resistor - Carbon Film 1/8 W 1%	332 kΩ	799103323
R628	Resistor - Carbon Film 1/8 W 1%	1.5 kΩ	799101501
R629	Resistor - Carbon Film 1/8 W 1%	332 kΩ	799103323
U601	IC - Dual OP Amp	LM358	30800244
U602	IC - Dual OP Amp	LM358	30800244

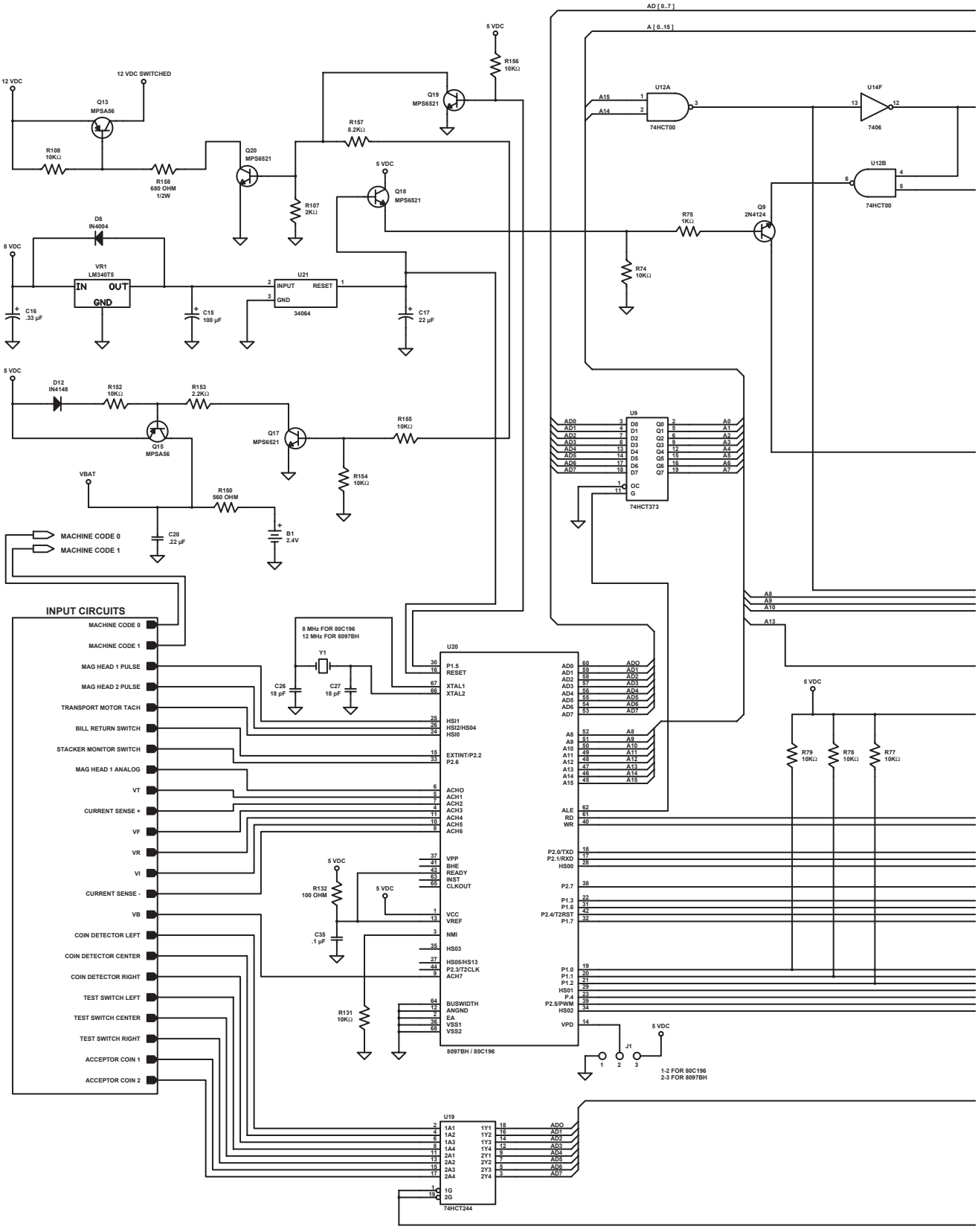
AD [0..7]
A [0..15]
5 VDC
R156 10KΩ
12 VDC
12 VDC SWITCHED
Q13 MPSA56
Q19 MPS6521
R157 8.2KΩ
U12A
74HCT00
U14F
7406
R108 10KΩ
Q20 MPS6521
R158 680 OHM 1/2W
5 VDC
Q18 MPS6521
U12B
74HCT00
D8 IN4004
R107 2KΩ
R75 1KΩ
Q9 2N4124
8 VDC
VR1 LM340T5
IN OUT GND
U21
INPUT RESET GND
34064
R74 10KΩ
C16 .33 µF
C15 100 µF
C17 22 µF
5 VDC
D12 IN4148
R152 10KΩ
R153 2.2KΩ
R155 10KΩ
Q15 MPSA56
Q17 MPS6521
R154 10KΩ
U9
74HCT373
VBAT
R150 560 OHM
C20 .22 µF
B1 2.4V
MACHINE CODE 0
MACHINE CODE 1
INPUT CIRCUITS
MACHINE CODE 0
MACHINE CODE 1
MAG HEAD 1 PULSE
MAG HEAD 2 PULSE
TRANSPORT MOTOR TACH
BILL RETURN SWITCH
STACKER MONITOR SWITCH
MAG HEAD 1 ANALOG
VT
CURRENT SENSE +
VF
VR
VI
CURRENT SENSE -
VB
COIN DETECTOR LEFT
COIN DETECTOR CENTER
COIN DETECTOR RIGHT
TEST SWITCH LEFT
TEST SWITCH CENTER
TEST SWITCH RIGHT
ACCEPTOR COIN 1
ACCEPTOR COIN 2
8 MHz FOR 80C196
12 MHz FOR 8097BH
Y1
C26 18 pF
C27 18 pF
U20
8097BH / 80C196
R132 100 OHM
C35 .1 µF
R131 10KΩ
R79 10KΩ
R78 10KΩ
R77 10KΩ
J1
1-2 FOR 80C196
2-3 FOR 8097BH
U19
74HCT244

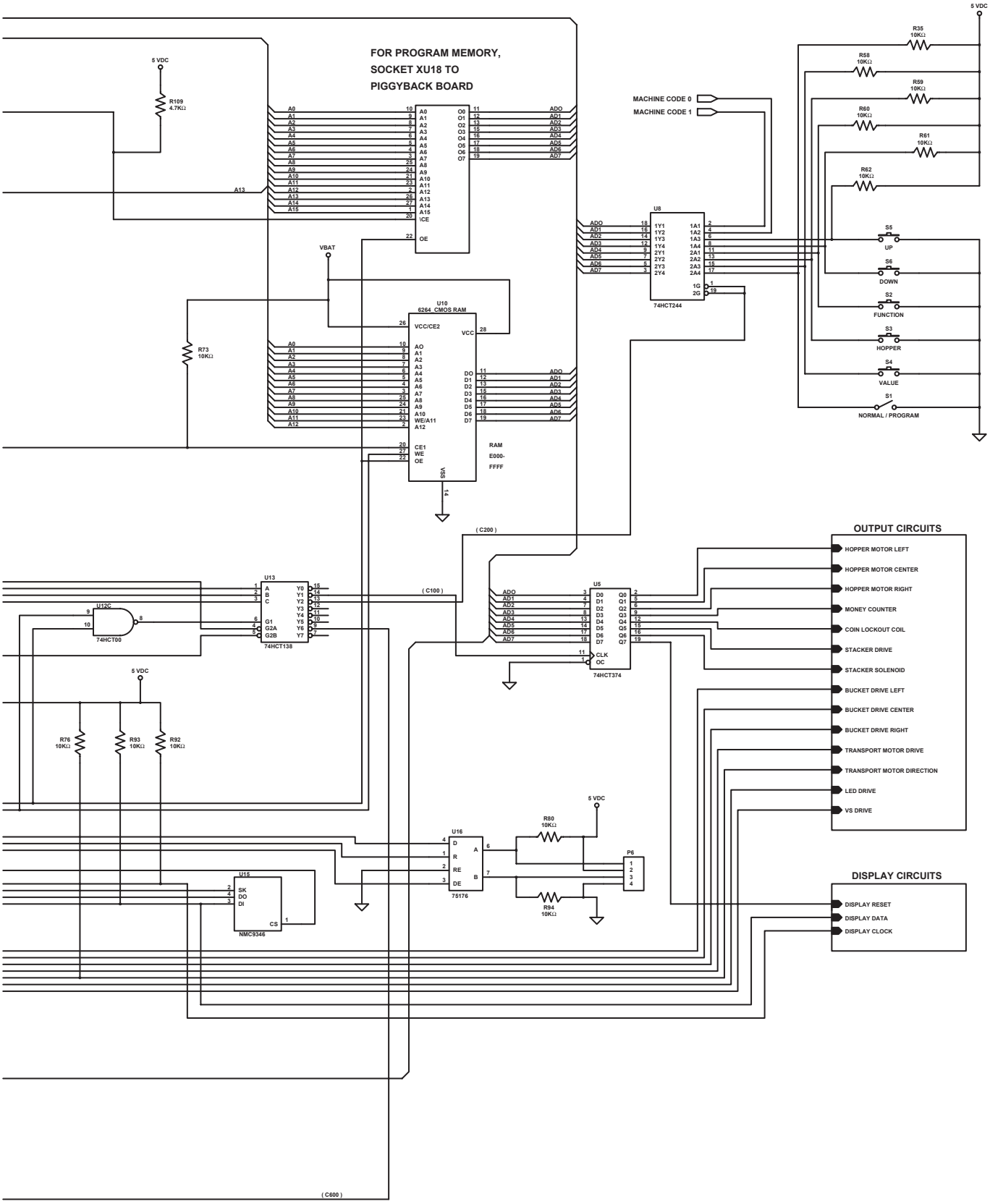

Figure 4-5. Schematic Diagram - Computer Control Board (Sheet 1)
For Equivalent Engineering Drawing See 65077450Q2

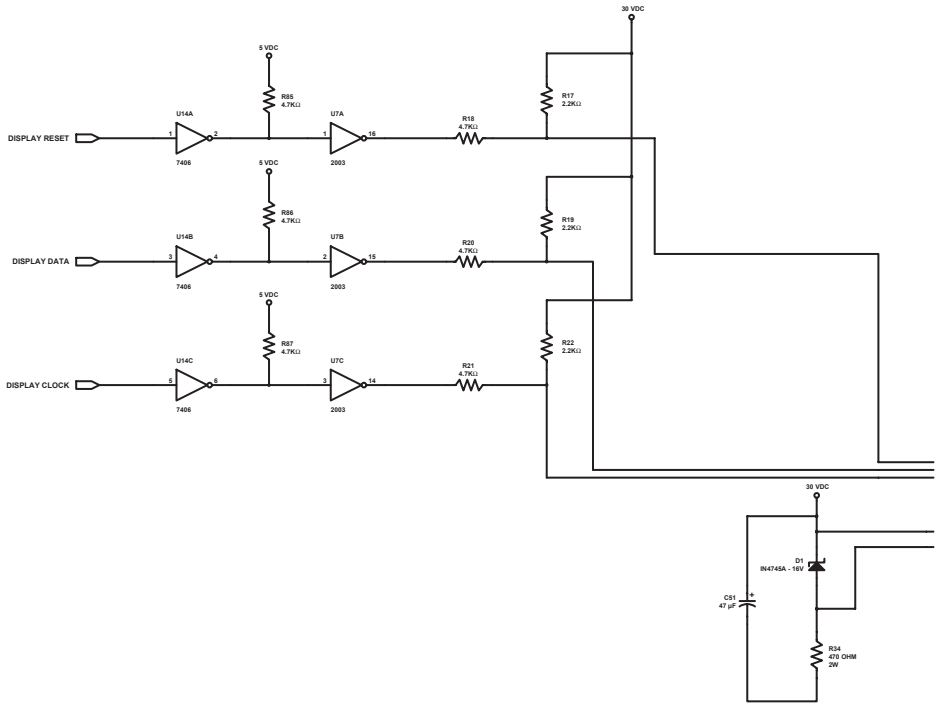

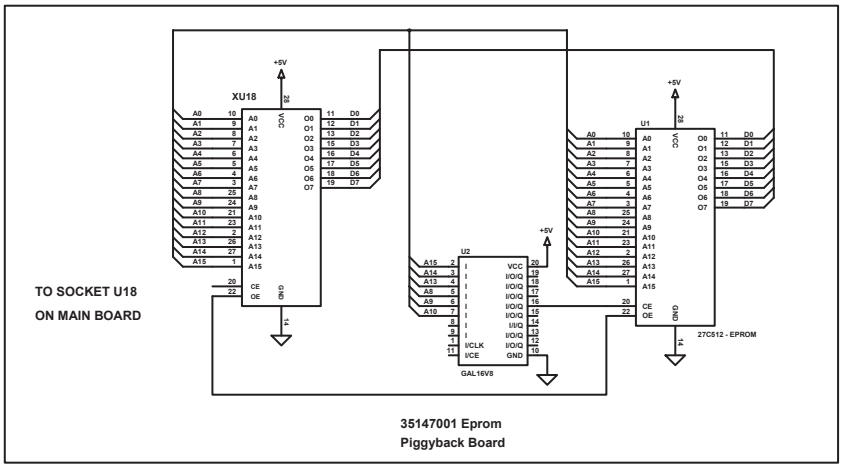

DEVICE	+5 VDC	GND	PGND
U5	20	10	
U6	14	7	
U7		8	
U8	20	10	
U9	20	10	
U11			8
U12	14	7	
U13	16	8	
U14	14	7	
U15	8	5	
U16	8	5	
U17	14	7	
U18	1,28	14	
U19	20	10	

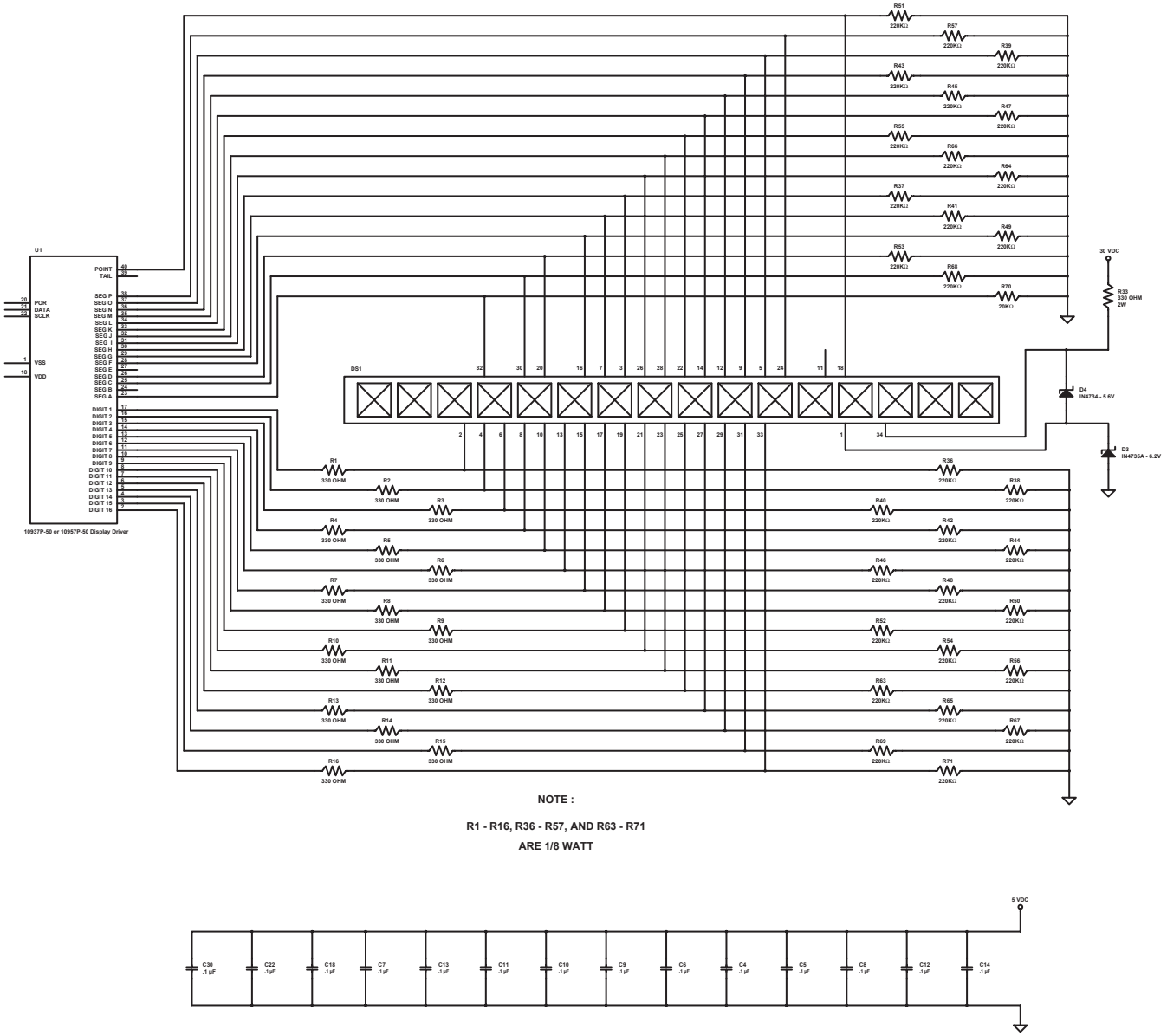

Figure 4-5. Schematic Diagram - Computer Control Board (Sheet 2)

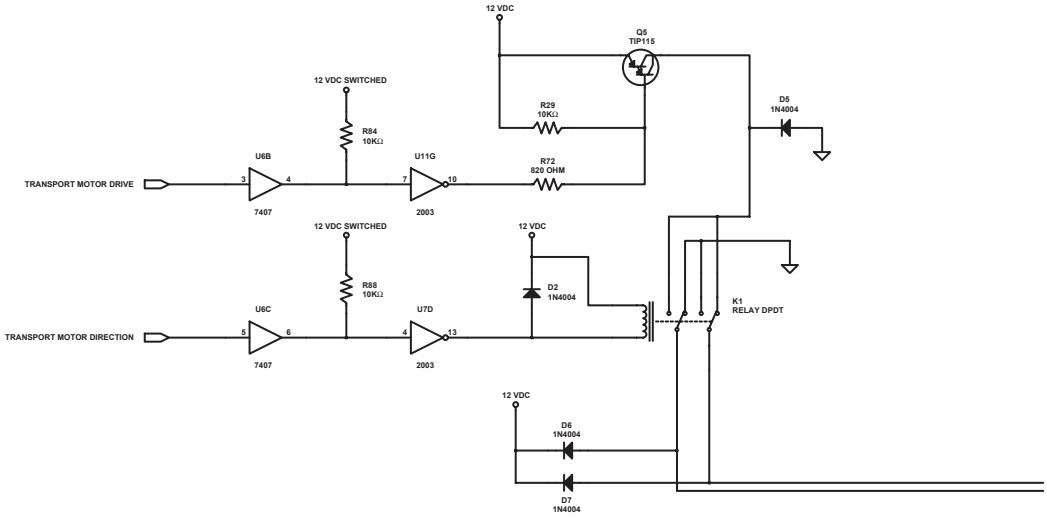
12 VDC
Q5
TIP115
12 VDC SWITCHED
R84
10KΩ
R29
10KΩ
D5
1N4004
U6B
U11G
TRANSPORT MOTOR DRIVE
R72
820 OHM
7407
2003
12 VDC SWITCHED
12 VDC
R88
10KΩ
D2
1N4004
K1
RELAY DPDT
U6C
U7D
TRANSPORT MOTOR DIRECTION
7407
2003
12 VDC
D6
1N4004
D7
1N4004

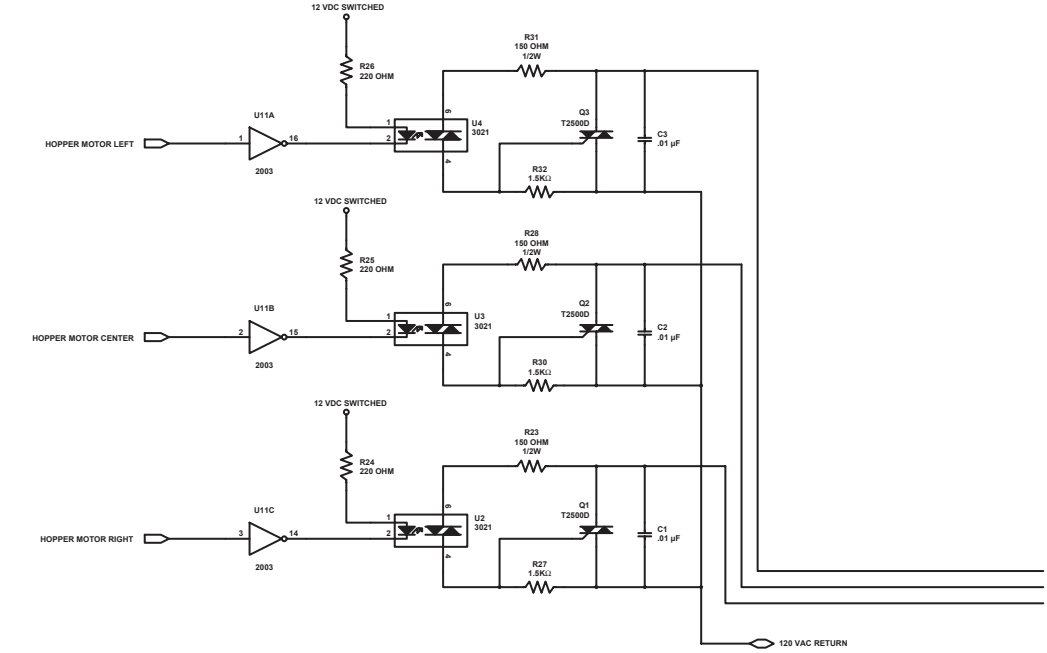
12 VDC SWITCHED
R26
220 OHM
R31
150 OHM
1/2W
U11A
U4
3021
Q3
T2500D
C3
.01 µF
HOPPER MOTOR LEFT
R32
1.5KΩ
2003
12 VDC SWITCHED
R25
220 OHM
R28
150 OHM
1/2W
U11B
U3
3021
Q2
T2500D
C2
.01 µF
HOPPER MOTOR CENTER
R30
1.5KΩ
2003
12 VDC SWITCHED
R24
220 OHM
R23
150 OHM
1/2W
U11C
U2
3021
Q1
T2500D
C1
.01 µF
HOPPER MOTOR RIGHT
R27
1.5KΩ
2003
120 VAC RETURN

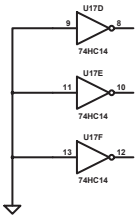
U17D
74HC14
U17E
74HC14
U17F
74HC14

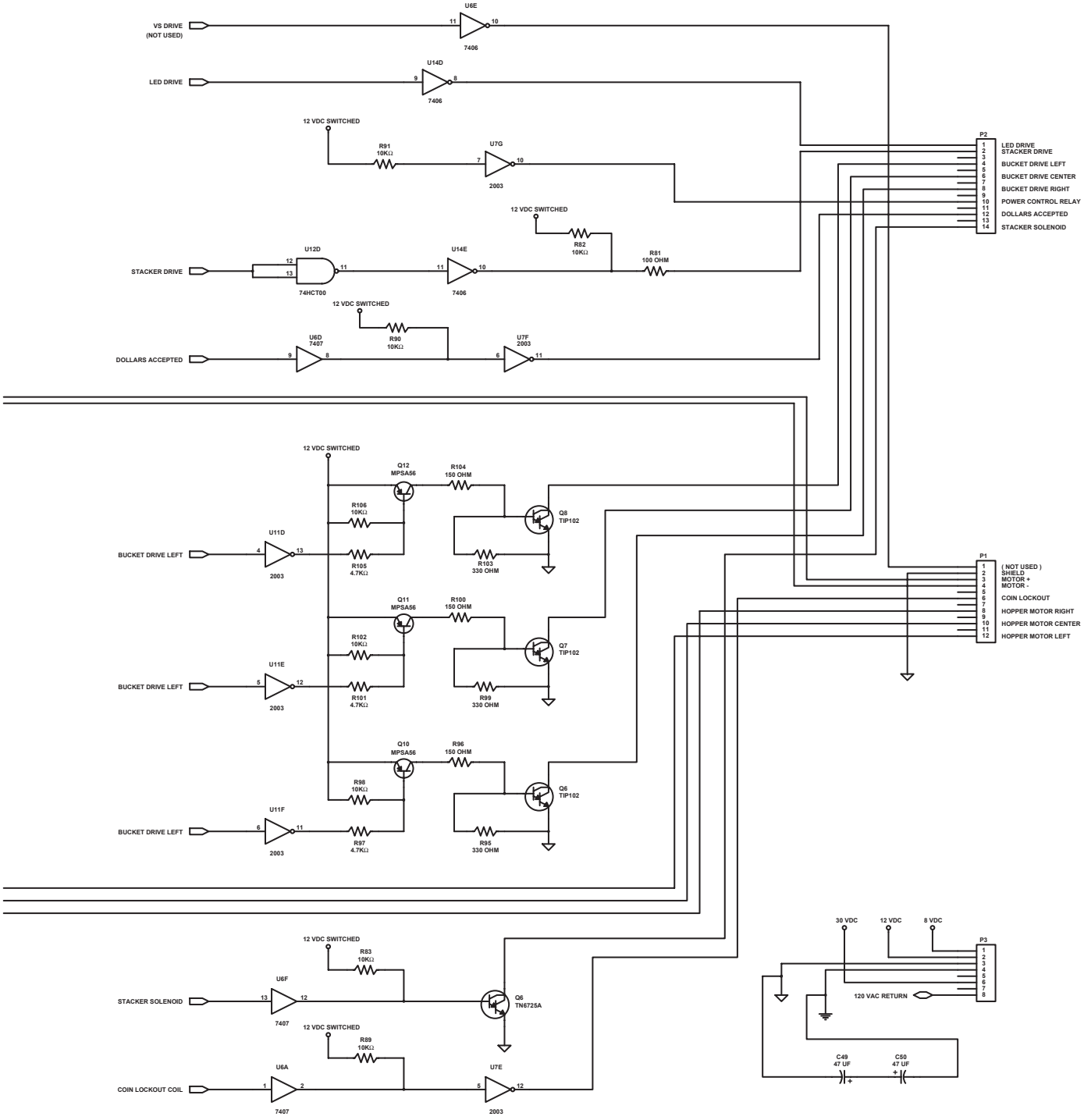

Figure 4-5. Schematic Diagram - Computer Control Board (Sheet 3)

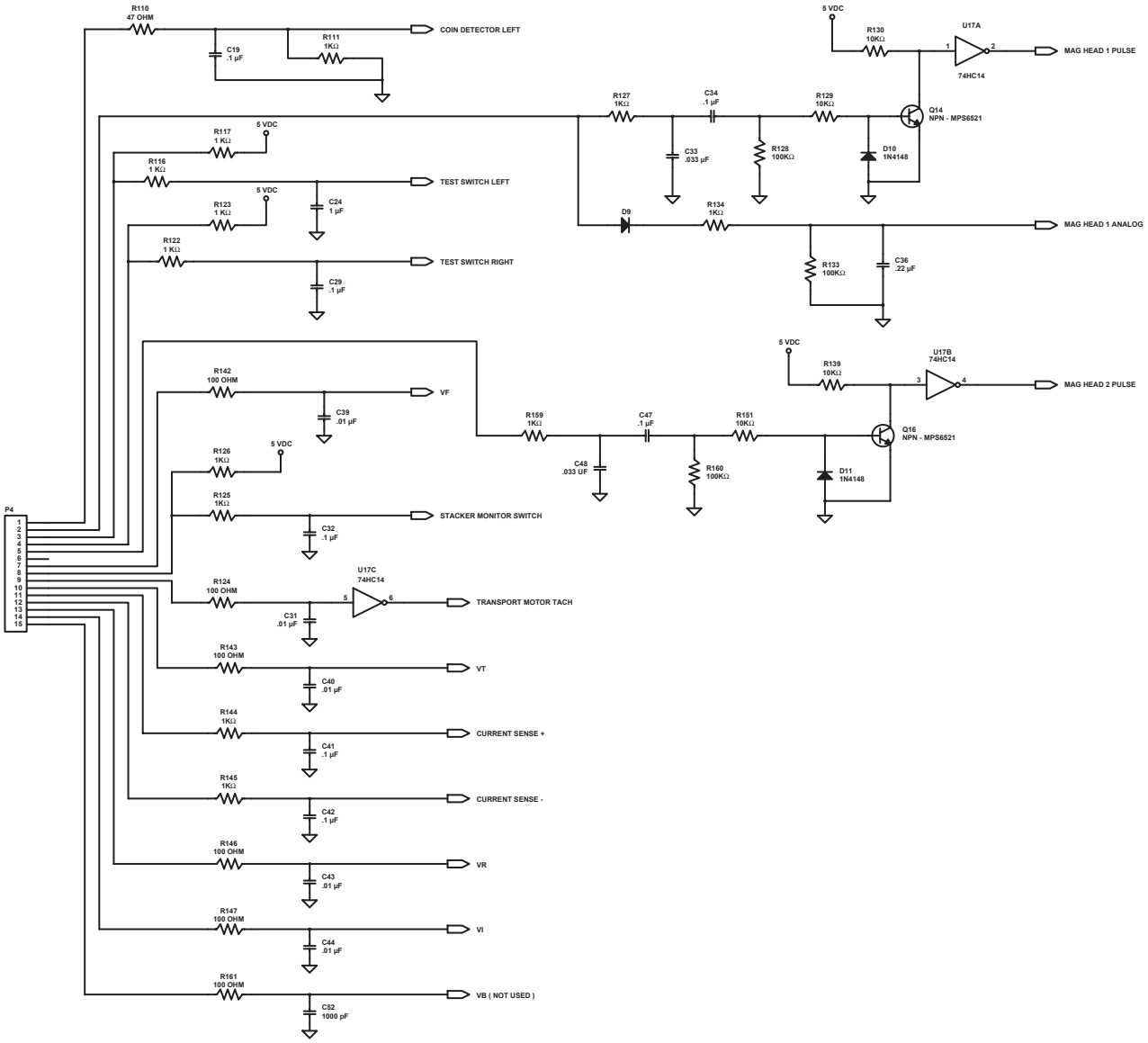
R110
47 OHM
C19
.1 µF
R111
1KΩ
COIN DETECTOR LEFT
5 VDC
R130
10KΩ
U17A
74HC14
MAG HEAD 1 PULSE
R127
1KΩ
C34
.1 µF
R129
10KΩ
Q14
NPN - MPS6521
C33
.033 µF
R128
100KΩ
D10
1N4148
R117
1 KΩ
R116
1 KΩ
TEST SWITCH LEFT
R123
1 KΩ
C24
1 µF
D9
R134
1KΩ
MAG HEAD 1 ANALOG
R122
1 KΩ
TEST SWITCH RIGHT
C29
.1 µF
R133
100KΩ
C36
.22 µF
R142
100 OHM
VF
C39
.01 µF
R139
10KΩ
U17B
74HC14
MAG HEAD 2 PULSE
R159
1KΩ
C47
.1 µF
R151
10KΩ
Q16
NPN - MPS6521
C48
.033 UF
R160
100KΩ
D11
1N4148
R126
1KΩ
R125
1KΩ
STACKER MONITOR SWITCH
C32
.1 µF
P4
U17C
74HC14
R124
100 OHM
TRANSPORT MOTOR TACH
C31
.01 µF
R143
100 OHM
VT
C40
.01 µF
R144
1KΩ
CURRENT SENSE +
C41
.1 µF
R145
1KΩ
CURRENT SENSE -
C42
.1 µF
R146
100 OHM
VR
C43
.01 µF
R147
100 OHM
VI
C44
.01 µF
R161
100 OHM
VB (NOT USED)
C62
1000 pF

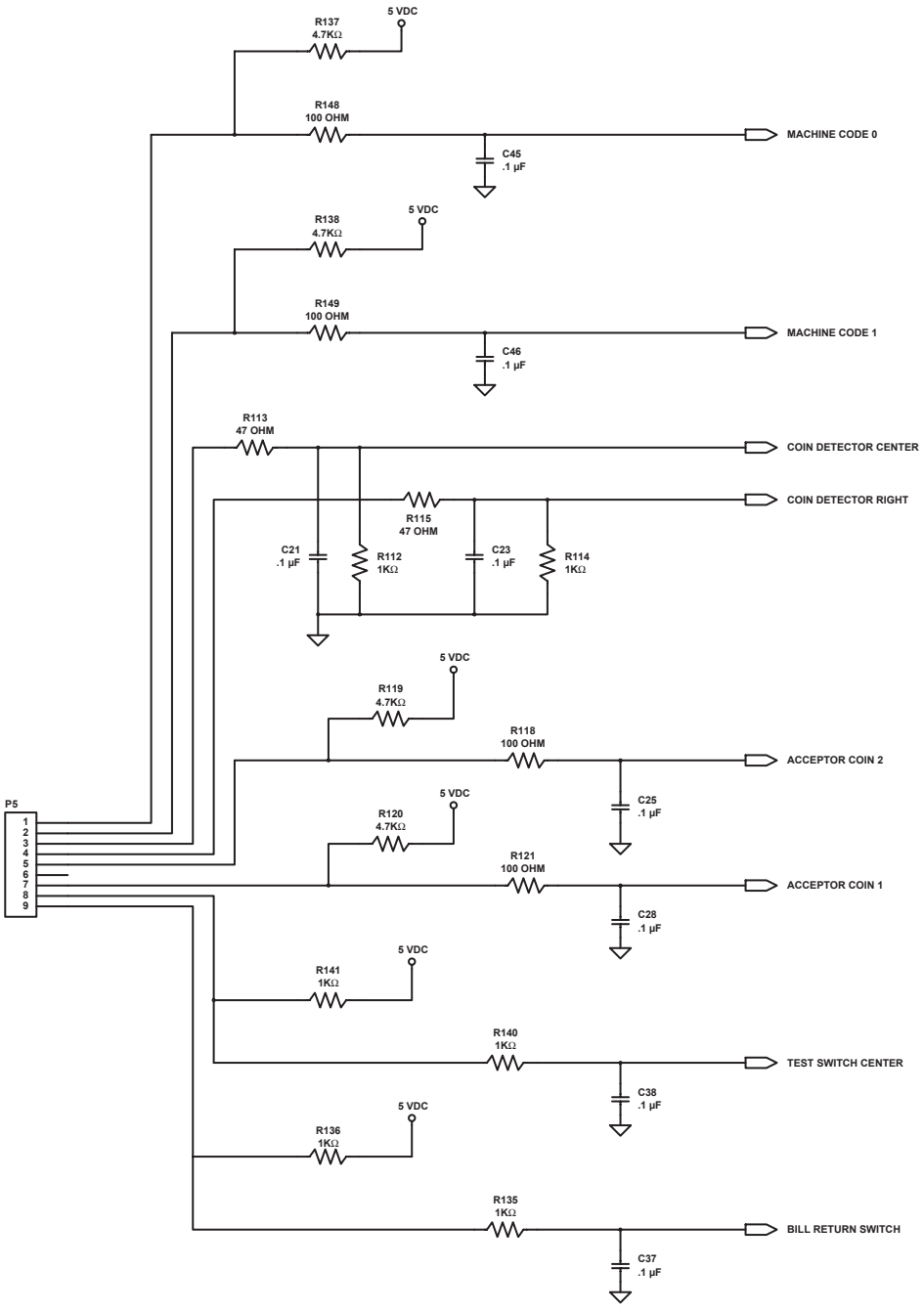

Figure 4-5. Schematic Diagram - Computer Control Board (Sheet 4)

Computer Control Board 65077450 (Rev. C)

B1	Battery - Rechargeable		30763103
C1	Capacitor - Ceramic Disc 1 kV 20%	.01 µF	70022508
C2	Capacitor - Ceramic Disc 1 kV 20%	.01 µF	70022508
C3	Capacitor - Ceramic Disc 1 kV 20%	.01 µF	70022508
C4	Capacitor - Monolithic Ceramic	.1 µF	70028511
C5	Capacitor - Monolithic Ceramic	.1 µF	70028511
C6	Capacitor - Monolithic Ceramic	.1 µF	70028511
C7	Capacitor - Monolithic Ceramic	.1 µF	70028511
C8	Capacitor - Monolithic Ceramic	.1 µF	70028511
C9	Capacitor - Monolithic Ceramic	.1 µF	70028511
C10	Capacitor - Monolithic Ceramic	.1 µF	70028511
C11	Capacitor - Monolithic Ceramic	.1 µF	70028511
C12	Capacitor - Monolithic Ceramic	.1 µF	70028511
C13	Capacitor - Monolithic Ceramic	.1 µF	70028511
C14	Capacitor - Monolithic Ceramic	.1 µF	70028511
C15	Capacitor - Electrolytic 16 VDC 20%	100 µF	70023814
C16	Capacitor - Tantalum 35 VDC 20%	.33 µF	70025119
C17	Capacitor - Electrolytic 35 VDC 20%	22 µF	70023810
C18	Capacitor - Monolithic Ceramic	.1 µF	70028511
C19	Capacitor - Monolithic Ceramic	.1 µF	70028511
C20	Capacitor - Monolithic Ceramic 20%	.22 µF	70028510
C21	Capacitor - Monolithic Ceramic	.1 µF	70028511
C22	Capacitor - Monolithic Ceramic	.1 µF	70028511
C23	Capacitor - Monolithic Ceramic	.1 µF	70028511
C24	Capacitor - Monolithic Ceramic	.1 µF	70028511
C25	Capacitor - Monolithic Ceramic	.1 µF	70028511
C26	Capacitor - Monolithic Ceramic 10%	18 pF	70028704
C27	Capacitor - Monolithic Ceramic 10%	18 pF	70028704
C28	Capacitor - Monolithic Ceramic	.1 µF	70028511
C29	Capacitor - Monolithic Ceramic	.1 µF	70028511
C30	Capacitor - Monolithic Ceramic	.1 µF	70028511
C31	Capacitor - Monolithic Ceramic 20%	.01 µF	70028501
C32	Capacitor - Monolithic Ceramic	.1 µF	70028511
C33	Capacitor - Monolithic Ceramic 20%	.033 µF	70028506
C34	Capacitor - Monolithic Ceramic 20%	.1 µF	70028514
C35	Capacitor - Monolithic Ceramic	.1 µF	70028511
C36	Capacitor - Mylar 10%	22 µF	70021553
C37	Capacitor - Monolithic Ceramic	.1 µF	70028511
C38	Capacitor - Monolithic Ceramic	.1 µF	70028511
C39	Capacitor - Monolithic Ceramic 10%	.01 µF	70028636
C40	Capacitor - Monolithic Ceramic 10%	.01 µF	70028636
C41	Capacitor - Monolithic Ceramic	.1 µF	70028511
C42	Capacitor - Monolithic Ceramic	.1 µF	70028511
C43	Capacitor - Monolithic Ceramic 10%	.01 µF	70028636
C44	Capacitor - Monolithic Ceramic 10%	.01 µF	70028636

C45	Capacitor - Monolithic Ceramic	.1 µF	70028511
C46	Capacitor - Monolithic Ceramic	.1 µF	70028511
C47	Capacitor - Monolithic Ceramic 20%	.1 µF	70028514
C48	Capacitor - Monolithic Ceramic 20%	.033 µF	70028506
C49	Capacitor - Tantalum	47 pF	70025102
C50	Capacitor - Tantalum	47 pF	70025102
C51	Capacitor - Electrolytic 35 VDC 20%	47 pF	70023812
C52	Capacitor - Monolithic Ceramic 20%	.1 µF	70028514
D1	Diode - Zener 15V 1W 5%	1N4744A	70035531
D2	Diode - Silicon	1N4004	70035005
D3	Diode - Zener 6.2V 1W 5%	1N4735A	70035508
D4	Diode - Zener 5.6V 1W 5%	1N4734A	70035507
D5	Diode - Silicon	1N4004	70035005
D6	Diode - Silicon	1N4004	70035005
D7	Diode - Silicon	1N4004	70035005
D8	Diode - Silicon	1N4004	70035005
D9	Diode - Silicon	1N4148	70035012
D10	Diode - Silicon	1N4148	70035012
D11	Diode - Silicon	1N4148	70035012
D12	Diode - Silicon	1N4148	70035012
DS1	Display - Vacuum Fluorescent	16 Char.	30933202
J1	Jumper		00503200
K1	Relay - DPDT		70042405
P1	Header - Polarized .156RT Angle	12 Position	70076012
P2	Header - Polarized .156RT Angle	14 Position	70076014
P3	Header - Polarized .156RT Angle	8 Position	70076008
P4	Header - Polarized .156RT Angle	15 Position	70076015
P5	Header - Polarized .156RT Angle	9 Position	70076009
P6	Header - Polarized	4 Position	70075004
Q1	Thyristor - Triac	T2500D	70038102
Q2	Thyristor - Triac	T2500D	70038102
Q3	Thyristor - Triac	T2500D	70038102
Q4	Transistor - Silicon Darlington		See NOTE 4
Q5	Transistor - Silicon Darlington	TIP115	70030805
Q6	Transistor - Silicon Darlington	TIP102	70030808
Q7	Transistor - Silicon Darlington	TIP102	70030808
Q8	Transistor - Silicon Darlington	TIP102	70030808
Q9	Transistor - Switching NPN	2N4124	70031301
Q10	Transistor - Silicon PNP	MPSA56	70030104
Q11	Transistor - Silicon PNP	MPSA56	70030104

Computer Control Board 65077450 (continued)

Q12	Transistor - Silicon PNP	MPSA56	70030104
Q13	Transistor - Silicon PNP		See NOTE 3
Q14	Transistor - Silicon NPN	MPS6521	70030007
Q15	Transistor - Silicon PNP	MPSA56	70030104
Q16	Transistor - Silicon NPN	MPS6521	70030007
Q17	Transistor - Silicon NPN	MPS6521	70030007
Q18	Transistor - Silicon NPN	MPS6521	70030007
Q19	Transistor - Silicon NPN	MPS6521	70030007
Q20	Transistor - Silicon NPN	MPS6521	70030007
R1	Resistor - Carbon Film 1/8W 5%	330 Ω	79905331
R2	Resistor - Carbon Film 1/8W 5%	330 Ω	79905331
R3	Resistor - Carbon Film 1/8W 5%	330 Ω	79905331
R4	Resistor - Carbon Film 1/8W 5%	330 Ω	79905331
R5	Resistor - Carbon Film 1/8W 5%	330 Ω	79905331
R6	Resistor - Carbon Film 1/8W 5%	330 Ω	79905331
R7	Resistor - Carbon Film 1/8W 5%	330 Ω	79905331
R8	Resistor - Carbon Film 1/8W 5%	330 Ω	79905331
R9	Resistor - Carbon Film 1/8W 5%	330 Ω	79905331
R10	Resistor - Carbon Film 1/8W 5%	330 Ω	79905331
R11	Resistor - Carbon Film 1/8W 5%	330 Ω	79905331
R12	Resistor - Carbon Film 1/8W 5%	330 Ω	79905331
R13	Resistor - Carbon Film 1/8W 5%	330 Ω	79905331
R14	Resistor - Carbon Film 1/8W 5%	330 Ω	79905331
R15	Resistor - Carbon Film 1/8W 5%	330 Ω	79905331
R16	Resistor - Carbon Film 1/8W 5%	330 Ω	79905331
R17	Resistor - Carbon Film 1/4W 5%	2.2 kΩ	79901222
R18	Resistor - Carbon Film 1/4W 5%	4.7 kΩ	79901472
R19	Resistor - Carbon Film 1/4W 5%	2.2 kΩ	79901222
R20	Resistor - Carbon Film 1/4W 5%	4.7 kΩ	79901472
R21	Resistor - Carbon Film 1/4W 5%	4.7 kΩ	79901472
R22	Resistor - Carbon Film 1/4W 5%	2.2 kΩ	79901222
R23	Resistor - Metal Film 1/2W 5%	150 Ω	79904151
R24	Resistor - Carbon Film 1/4W 5%	220 Ω	79901221
R25	Resistor - Carbon Film 1/4W 5%	220 Ω	79901221
R26	Resistor - Carbon Film 1/4W 5%	220 Ω	79901221
R27	Resistor - Carbon Film 1/4W 5%	1.5 kΩ	79901152
R28	Resistor - Metal Film 1/2W 5%	150 Ω	79904151
R29	Resistor - Carbon Film 1/4W 5%	10 kΩ	79901103
R30	Resistor - Carbon Film 1/4W 5%	1.5 kΩ	79901152
R31	Resistor - Metal Film 1/2W 5%	150 Ω	79904151
R32	Resistor - Carbon Film 1/4W 5%	1.5 kΩ	79901152
R33	Resistor - Wirewound 2W 10%	330 Ω	79920331
R34	Resistor - Wirewound 2W 10%	470 Ω	79920471
R35	Resistor - Carbon Film 1/4W 5%	10 kΩ	79901103
R36	Resistor - Carbon Film 1/8W 5%	220 kΩ	79905224

R37	Resistor - Carbon Film 1/8W 5%	220 kΩ	79905224
R38	Resistor - Carbon Film 1/8W 5%	220 kΩ	79905224
R39	Resistor - Carbon Film 1/8W 5%	220 kΩ	79905224
R40	Resistor - Carbon Film 1/8W 5%	220 kΩ	79905224
R41	Resistor - Carbon Film 1/8W 5%	220 kΩ	79905224
R42	Resistor - Carbon Film 1/8W 5%	220 kΩ	79905224
R43	Resistor - Carbon Film 1/8W 5%	220 kΩ	79905224
R44	Resistor - Carbon Film 1/8W 5%	220 kΩ	79905224
R45	Resistor - Carbon Film 1/8W 5%	220 kΩ	79905224
R46	Resistor - Carbon Film 1/8W 5%	220 kΩ	79905224
R47	Resistor - Carbon Film 1/8W 5%	220 kΩ	79905224
R48	Resistor - Carbon Film 1/8W 5%	220 kΩ	79905224
R49	Resistor - Carbon Film 1/8W 5%	220 kΩ	79905224
R50	Resistor - Carbon Film 1/8W 5%	220 kΩ	79905224
R51	Resistor - Carbon Film 1/8W 5%	220 kΩ	79905224
R52	Resistor - Carbon Film 1/8W 5%	220 kΩ	79905224
R53	Resistor - Carbon Film 1/8W 5%	220 kΩ	79905224
R54	Resistor - Carbon Film 1/8W 5%	220 kΩ	79905224
R55	Resistor - Carbon Film 1/8W 5%	220 kΩ	79905224
R56	Resistor - Carbon Film 1/8W 5%	220 kΩ	79905224
R57	Resistor - Carbon Film 1/8W 5%	220 kΩ	79905224
R58	Resistor - Carbon Film 1/4W 5%	10 kΩ	79901103
R59	Resistor - Carbon Film 1/4W 5%	10 kΩ	79901103
R60	Resistor - Carbon Film 1/4W 5%	10 kΩ	79901103
R61	Resistor - Carbon Film 1/4W 5%	10 kΩ	79901103
R62	Resistor - Carbon Film 1/4W 5%	10 kΩ	79901103
R63	Resistor - Carbon Film 1/8W 5%	220 kΩ	79905224
R64	Resistor - Carbon Film 1/8W 5%	220 kΩ	79905224
R65	Resistor - Carbon Film 1/8W 5%	220 kΩ	79905224
R66	Resistor - Carbon Film 1/8W 5%	220 kΩ	79905224
R67	Resistor - Carbon Film 1/8W 5%	220 kΩ	79905224
R68	Resistor - Carbon Film 1/8W 5%	220 kΩ	79905224
R69	Resistor - Carbon Film 1/8W 5%	220 kΩ	79905224
R70	Resistor - Carbon Film 1/8W 5%	220 kΩ	79905224
R71	Resistor - Carbon Film 1/8W 5%	220 kΩ	79905224
R72	Resistor - Carbon Film 1/4W 5%	820 kΩ	79901821
R73	Resistor - Carbon Film 1/4W 5%	10 kΩ	79901103
R74	Resistor - Carbon Film 1/4W 5%	10 kΩ	79901103
R75	Resistor - Carbon Film 1/4W 5%	1 kΩ	79901102
R76	Resistor - Carbon Film 1/4W 5%	10 kΩ	79901103
R77	Resistor - Carbon Film 1/4W 5%	10 kΩ	79901103
R78	Resistor - Carbon Film 1/4W 5%	10 kΩ	79901103
R79	Resistor - Carbon Film 1/4W 5%	10 kΩ	79901103
R80	Resistor - Carbon Film 1/4W 5%	10 kΩ	79901103
R81	Resistor - Carbon Film 1/4W 5%	100 Ω	79901101
R82	Resistor - Carbon Film 1/4W 5%	10 kΩ	79901103

Computer Control Board 65077450 (continued)

R83	Resistor - Carbon Film 1/4W 5%	10 kΩ	79901103
R84	Resistor - Carbon Film 1/4W 5%	10 kΩ	79901103
R85	Resistor - Carbon Film 1/4W 5%	4.7 kΩ	79901472
R86	Resistor - Carbon Film 1/4W 5%	4.7 kΩ	79901472
R87	Resistor - Carbon Film 1/4W 5%	4.7 kΩ	79901472
R88	Resistor - Carbon Film 1/4W 5%	10 kΩ	79901103
R89	Resistor - Carbon Film 1/4W 5%	10 kΩ	79901103
R90	Resistor - Carbon Film 1/4W 5%	10 kΩ	79901103
R91	Resistor - Carbon Film 1/4W 5%	10 kΩ	79901103
R92	Resistor - Carbon Film 1/4W 5%	10 kΩ	79901103
R93	Resistor - Carbon Film 1/4W 5%	10 kΩ	79901103
R94	Resistor - Carbon Film 1/4W 5%	10 kΩ	79901103
R95	Resistor - Carbon Film 1/4W 5%	330 Ω	79901331
R96	Resistor - Carbon Film 1/4W 5%	150 Ω	79901151
R97	Resistor - Carbon Film 1/4W 5%	4.7 kΩ	79901472
R98	Resistor - Carbon Film 1/4W 5%	10 kΩ	79901103
R99	Resistor - Carbon Film 1/4W 5%	330 Ω	79901331
R100	Resistor - Carbon Film 1/4W 5%	150 Ω	79901151
R101	Resistor - Carbon Film 1/4W 5%	4.7 kΩ	79901472
R102	Resistor - Carbon Film 1/4W 5%	10 kΩ	79901103
R103	Resistor - Carbon Film 1/4W 5%	330 Ω	79901331
R104	Resistor - Carbon Film 1/4W 5%	150 Ω	79901151
R105	Resistor - Carbon Film 1/4W 5%	4.7 kΩ	79901472
R106	Resistor - Carbon Film 1/4W 5%	10 kΩ	79901103
R107	Resistor - Carbon Film 1/4W 5%	2 kΩ	79901202
R108	Resistor - Carbon Film 1/4W 5%	10 kΩ	79901103
R109	Resistor - Carbon Film 1/4W 5%	4.7 kΩ	79901472
R110	Resistor - Carbon Film 1/4W 5%	47 kΩ	79901470
R111	Resistor - Carbon Film 1/4W 5%	1 kΩ	79901102
R112	Resistor - Carbon Film 1/4W 5%	1 kΩ	79901102
R113	Resistor - Carbon Film 1/4W 5%	47 kΩ	79901470
R114	Resistor - Carbon Film 1/4W 5%	1 kΩ	79901102
R115	Resistor - Carbon Film 1/4W 5%	47 kΩ	79901470
R116	Resistor - Carbon Film 1/4W 5%	1 kΩ	79901102
R117	Resistor - Carbon Film 1/4W 5%	1 kΩ	79901102
R118	Resistor - Carbon Film 1/4W 5%	100 Ω	79901101
R119	Resistor - Carbon Film 1/4W 5%	4.7 kΩ	79901472
R120	Resistor - Carbon Film 1/4W 5%	4.7 kΩ	79901472
R121	Resistor - Carbon Film 1/4W 5%	100 Ω	79901101
R122	Resistor - Carbon Film 1/4W 5%	1 kΩ	79901102
R123	Resistor - Carbon Film 1/4W 5%	1 kΩ	79901102
R124	Resistor - Carbon Film 1/4W 5%	100 Ω	79901101
R125	Resistor - Carbon Film 1/4W 5%	1 kΩ	79901102
R126	Resistor - Carbon Film 1/4W 5%	1 kΩ	79901102
R127	Resistor - Carbon Film 1/4W 5%	1 kΩ	79901102
R128	Resistor - Carbon Film 1/4W 5%	100 kΩ	79901104

R129	Resistor - Carbon Film 1/4W 5%	10 kΩ	79901103
R130	Resistor - Carbon Film 1/4W 5%	10 kΩ	79901103
R131	Resistor - Carbon Film 1/4W 5%	10 kΩ	79901103
R132	Resistor - Carbon Film 1/4W 5%	100 Ω	79901101
R133	Resistor - Carbon Film 1/4W 5%	100 kΩ	79901104
R134	Resistor - Carbon Film 1/4W 5%	1 kΩ	79901102
R135	Resistor - Carbon Film 1/4W 5%	1 kΩ	79901102
R136	Resistor - Carbon Film 1/4W 5%	1 kΩ	79901102
R137	Resistor - Carbon Film 1/4W 5%	4.7 kΩ	79901472
R138	Resistor - Carbon Film 1/4W 5%	4.7 kΩ	79901472
R139	Resistor - Carbon Film 1/4W 5%	10 kΩ	79901103
R140	Resistor - Carbon Film 1/4W 5%	1 kΩ	79901102
R141	Resistor - Carbon Film 1/4W 5%	1 kΩ	79901102
R142	Resistor - Carbon Film 1/4W 5%	100 Ω	79901101
R143	Resistor - Carbon Film 1/4W 5%	100 Ω	79901101
R144	Resistor - Carbon Film 1/4W 5%	1 kΩ	79901102
R145	Resistor - Carbon Film 1/4W 5%	1 kΩ	79901102
R146	Resistor - Carbon Film 1/4W 5%	100 Ω	79901101
R147	Resistor - Carbon Film 1/4W 5%	100 Ω	79901101
R148	Resistor - Carbon Film 1/4W 5%	100 Ω	79901101
R149	Resistor - Carbon Film 1/4W 5%	100 Ω	79901101
R150	Resistor - Carbon Film 1/4W 5%	560 Ω	79901561
R151	Resistor - Carbon Film 1/4W 5%	10 kΩ	79901103
R152	Resistor - Carbon Film 1/4W 5%	10 kΩ	79901103
R153	Resistor - Carbon Film 1/4W 5%	2.2 kΩ	79901222
R154	Resistor - Carbon Film 1/4W 5%	10 kΩ	79901103
R155	Resistor - Carbon Film 1/4W 5%	10 kΩ	79901103
R156	Resistor - Carbon Film 1/4W 5%	10 kΩ	79901103
R157	Resistor - Carbon Film 1/4W 5%	8.2 kΩ	79901822
R158	Resistor - Metal Film 1/2W 5%	680 Ω	79904681
R159	Resistor - Carbon Film 1/4W 5%	1 kΩ	79901102
R160	Resistor - Carbon Film 1/4W 5%	100 kΩ	79901104
R161	Resistor - Carbon Film 1/4W 5%	100 Ω	79901101
S1	Switch - Slide Micro Miniature		70045001
S2	Switch - Pushbutton		21773303
S3	Switch - Pushbutton		21773303
S4	Switch - Pushbutton		21773303
S5	Switch - Pushbutton		21773303
S6	Switch - Pushbutton		21773303
U1	I.C. - Display Driver	10937P-50	30800237
U2	Photocoupler - Opto-Triac	3021	70033705
U3	Photocoupler - Opto-Triac	3021	70033705
U4	Photocoupler - Opto-Triac	3021	70033705
U5	I.C. - Octal D Latch	74HCT374	79930374

Computer Control Board 65077450 (continued)

U6	I.C. - TTL Hex Buffer O.C.	7407	70036309
U7	I.C. - Darlington Array	ULN2003	70036901
U8	I.C. - Octal Buffer	74HCT244	79930244
U9	I.C. - Octal Transparent Latch	74HCT373	79930373
U10	I.C. - 32K X 8 CMOS RAM	62256	70036619
U11	I.C. - Darlington Array	ULN2003	70036901
U12	I.C. - Quad 2 Input NAND Gate	74HCT00	79930000
U13	I.C. - 1 of 8 Decoder	74HCT138	79930138
U14	I.C. - TTL Hex Inverter O.C.	7406	70036311
U15	I.C. - EEPROM 64X16 Serial	NMC9346N	30800245
U16	I.C. - Transceiver RS-485	75176	70037801
U17	I.C. - Hex Schmitt Trigger Invertor	74HC14	79940014
U18	EPROM Module		See Chart
U19	I.C. - Octal Buffer	74HCT244	79930244
U20	I.C. - Microcomputer	80C196/8097	See NOTE 1
U21	I.C. - Under Voltage Sensing Circuit		30800243
VR1	Voltage Regulator	LM340T5	70036505
Y1	Crystal - Quartz		See NOTE 1

See 65077450 drawing for notes and P/N's.

EPROM Module Chart

Computer	EPROM Module
65077450	35147001
65077458	35147011

This page intentionally left blank.

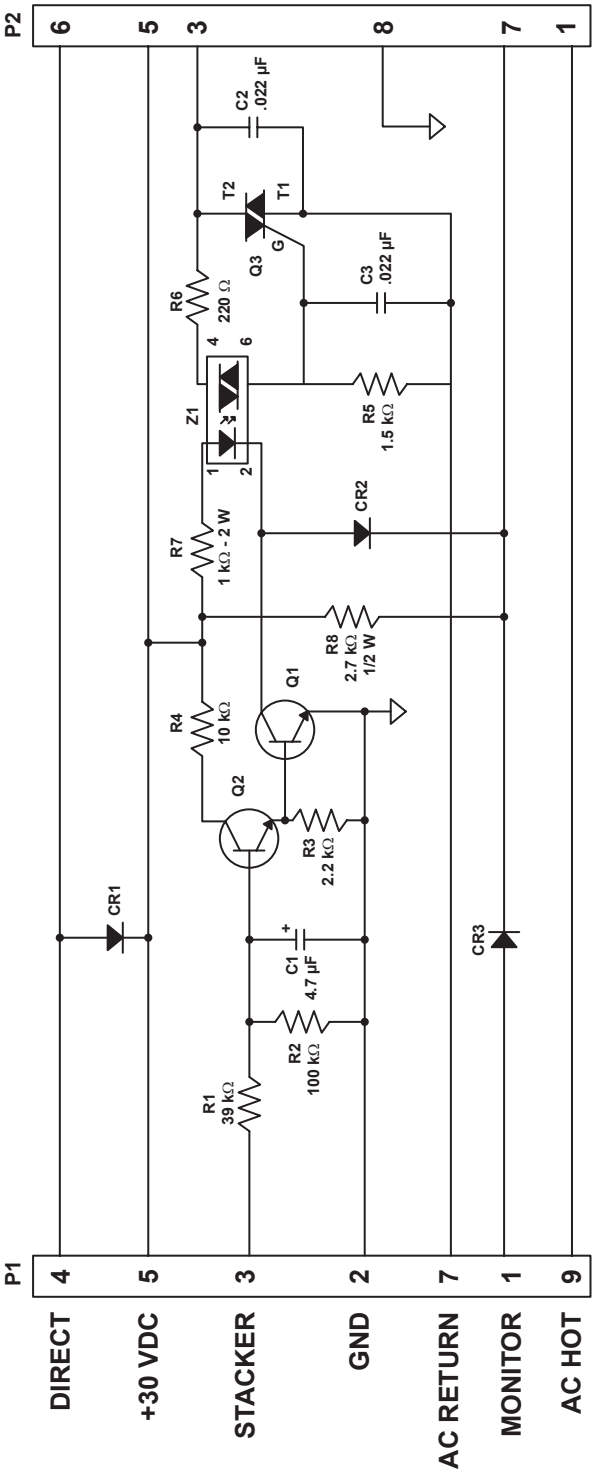

Figure 4-6. Stacker Driver Circuit Board Schematic

Bill Stacker Driver Circuit Board 65046701 (Rev. L)

C1	Capacitor - Electrolytic 50 VDC	4.7 µF	70023806
C2	Capacitor - Mylar 630 VDC	.022 µF	70021609
C3	Capacitor - Mylar 630 VDC	.022 µF	70021609
CR1	Diode - Silicon		70035005
CR2	Diode - Silicon		70035007
CR3	Diode - Silicon		70035101
P1	Polarizing Wafer Assembly (90°)	9 Circuit	70076009
P2	Polarizing Wafer Assembly (90°)	8 Circuit	70076008
Q1	Transistor - Silicon (NPN)		70030004
Q2	Transistor - Silicon (NPN)		70030004
Q3	Thyristor - Triac		70033102

Note: All resistors are ¼ watt 5%, unless otherwise noted.

R1	Resistor - Carbon	39 kΩ	79901393
R2	Resistor - Carbon	100 kΩ	79901104
R3	Resistor - Carbon	2.2 kΩ	79901222
R4	Resistor - Carbon	10 kΩ	79901103
R5	Resistor - Carbon	1.5 kΩ	79901152
R6	Resistor - Carbon	220 Ω	79901221
R7	Resistor - Carbon	100 kΩ	79901104
R8	Resistor - Carbon 2W 10%	1 kΩ	70012007

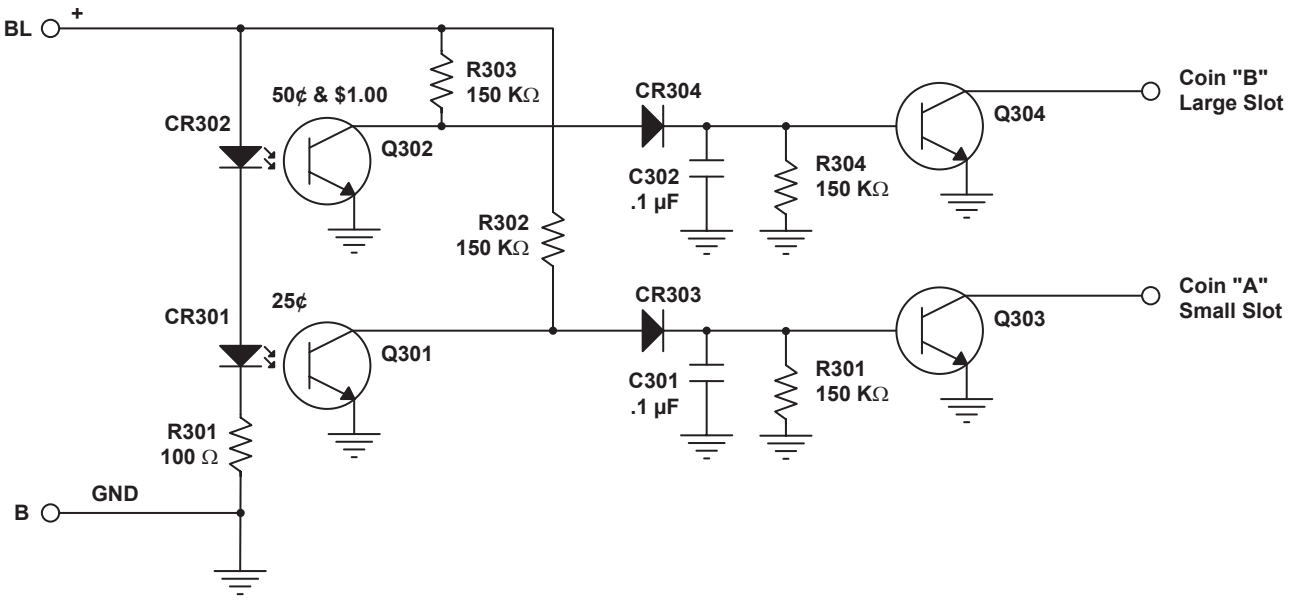

Figure 4-7. Schematic Diagram - Coin Switch

Coin Switch Circuit Board 45048203 (Rev. L)

C301	Capacitor - Monolithic	.1 µF	70028514
C302	Capacitor - Monolithic	.1 µF	70028514
CR301/ Q301	Sensor/LED Pair		70033501
CR302/ Q302	Sensor/LED Pair		70033501
CR303	Diode - Silicon		70035007
CR304	Diode - Silicon		70035007
Q303	Transistor - Silicon (NPN)		70030007
Q304	Transistor - Silicon (NPN)		70030007

Note: All resistors are ¼ watt 5%, unless otherwise noted.

R301	Resistor - Carbon	100 Ω	79901101
R302	Resistor - Carbon	150 Ω	79901154
R303	Resistor - Carbon	150 Ω	79901154
R304	Resistor - Carbon	150 Ω	79901154
R305	Resistor - Carbon	150 Ω	79901154

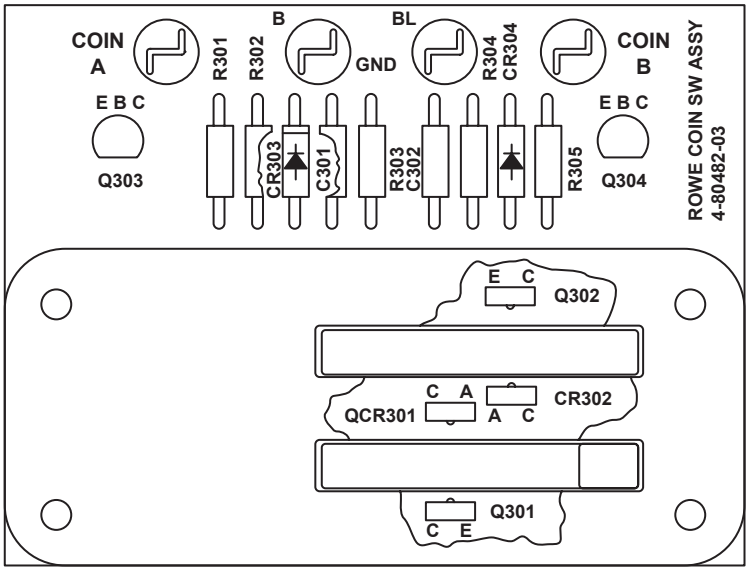

Figure 4-8. Circuit Board Layout

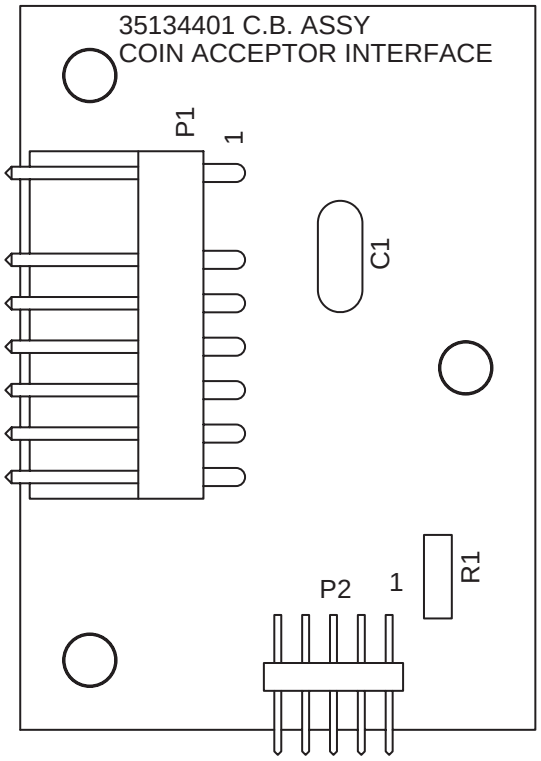

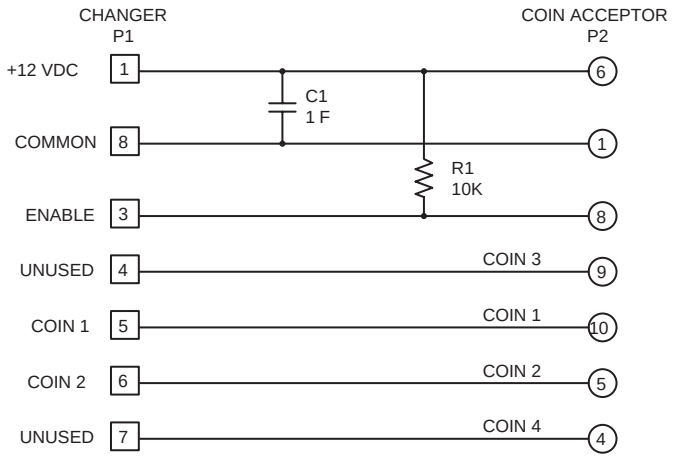

Figure 4-9. Electric Coin Acceptor Interface 35134401

Circuit Board Assembly - Electronic Coin Acceptor Interface 35134401

C1	Capacitor - Monoceramic	.1 µF	70028514
P1	Polarizing Wafer (90°)	8 Circuits	70076008
P2	Terminal Strip (.100) - Double Row (90°)		70089535
R1	Resistor 1/4W 5%	10 kΩ	79901103

Interconnect Circuit Board Assembly - 45076402 (Rev. B)

D1	Diode - Silicon		70035006
D2	Diode - Silicon		70035006
D3	Diode - Silicon		70035006
P1	Wafer - Polarizing	7 Circuit	70075007
P2	Wafer - Polarizing	15 Circuit	70080515
P3	Wafer - Polarizing	3 Circuit	70075003
P4	Wafer - Polarizing	3 Circuit	70075003
P5	Wafer - Polarizing	3 Circuit	70075003
P6	Wafer - Polarizing	2 Circuit	70075002
P7	Wafer - Polarizing	2 Circuit	70075002
P8	Wafer - Polarizing	3 Circuit	70075003
P9	Wafer - Polarizing	3 Circuit	70075003
P10	Wafer - Polarizing	3 Circuit	70075003
P11	Wafer - Polarizing	3 Circuit	70075003

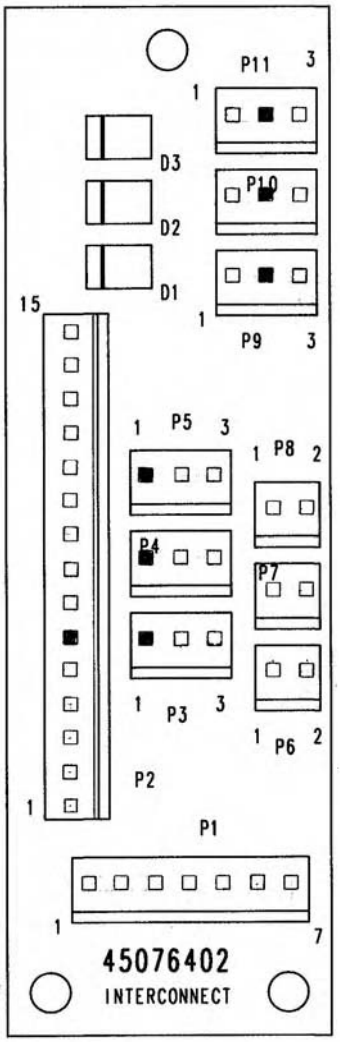

Figure 4-10. Interconnect Circuit Board Assembly

Section 5: Additional Information

HARNESS COLOR CODING

Harness wiring in the BC-3500 is color coded according to function. To check wiring in the machine, find the function you want in the chart below and not the wire color associated with this function. Then, check this color wiring to find the source of the problem. The wiring diagram will tell you where the wires are routed.

FUNCTIONS	WIRE COLOR
SUPPLY VOLTAGES[1]	
120 VAC Hot	Black/White
120 AC Common	White
+40 VDC Sensed	Violet/Orange
+30 VDC	Red
+5 VDC to out of service lamp	Brown/Yellow
+12 VDC	Violet
+8 VDC	Slate
+5 VDC	Blue
GROUNDS	
Earth (Fault) Ground	Green/Yellow
High Current Ground	Black
Low Current Ground	Black
SPECIAL LINES	
Transport:	
Magnetic Head	White/Brown & White/Green
VF Cell	Brown
VI Cell	Yellow
VT Cell	White
VR Cell	Orange
Transport Motor	Shielded Cable
Bill Stacker:	
Stacker Drive Signal	Green/Orange
Stacker Monitor	Green/White
Separator Solenoid	Blue/Yellow

[1] Inside the power control center, as voltage lines pass through the circuit breakers, wire colors change for clarity. See the power control center power supply schematic for these wire colors.

FUNCTIONS	WIRE COLOR
Coin Switch Assembly:	
Coin Lockout Coil	White/Blue
25¢ Coin Switch	White/Brown
50¢/$1.00 Coin Switch	White/Yellow
Dispenser:	
Left Coin Detector	Orange/Green
Center Coin Detector	Orange/Brown
Right Coin Detector	Orange/Black
Left Hopper Motor	Black/Red
Center Hopper Motor	Brown
Right Hopper Motor	Black/Yellow
Left Vend Solenoid	Yellow/Brown
Center Vend Solenoid	Red/Black
Right Vend Solenoid	Blue/White
Bill Return Switch:	Red/Green
Out of Service Lamp:	Brown/Yellow

This page intentionally left blank.

Section 6: Parts Catalog

BC-3500 ORDER CODE SHEET 6-2

INTRODUCTION 6-3
Catalog Description 6-3
Parts List Description 6-3
Ordering Replacement Parts 6-3

PARTS CATALOG
Model BC-3500 Bill and Coin Changer Assembly 6-4
Replacement Cabinet Part Nos. 6-6
Top Cabinet Assembly 6-8
Top Cabinet Door Assembly 6-12
Base Cabinet Assembly 6-14
BA-50 Bill Acceptor Assembly 6-16
Power Control Center Assembly 6-20
Control Computer Assembly 6-22
Coin Dispenser Assembly 6-24
Change Bucket Assembly 6-26
Hi-Capacity Hopper Assembly 6-28
Coin Acceptor Bracket and Harness Assembly 6-30
Dual Bill Stacker Assembly 6-34
Coin Inlet and Chute Assembly 6-38
Accessory Kits 6-40
Repair Parts and Spare Parts 6-40

DIGIT 1 = MODEL IDENTIFICATION

5 = Bill Changer

DIGIT 2 & 3 = CABINET ASSEMBLY/VOLTAGE

02 = Blue/White	-120 Volt = 2-52382-02
08 = White	-120 Volt = 2-52382-08
09 = IBM Black	-120 Volt = 2-52382-09
10 = Special Color	-120 Volt = 2-52382-10
12 = Blue/White	-220 Volt = 2-52382-12
18 = White	-220 Volt = 2-52382-18
20 = Special Color	-220 Volt = 2-52382-20
31 = Black New Style	-120 Volt = 2-52382-31
32 = New Style (IBM Black)	-120/220 Volt = 2-52382-32
33 = New Style (IBM Black)	-120/220 Volt = 2-52382-33
32 = New Style (IBM Black)	-120/220 Volt = 2-52382-32
35 = IBM Black (No BA Opening)	-120 Volt = 2-52382-35
36 = Blue/White (No BA Opening)	-120 Volt = 2-52382-36
37 = Brown	-120 Volt = 2-52382-37

DIGIT 4 & 5 = COMMON PARTS GROUP

73 = BC-3500	=2-52378-01
82 = BC-3500 MDTA	=2-52378-03
85 = BC-3500 CTA	=2-52378-04
94 = Namco	=2-52378-05
05 = BC-3500 Brazil (Cashcode)	=2-52378-06
30 = BC-3500 Columbia (Cashcode)	=2-52378-07
31 = BC-3500 Peru (Cashcode)	=2-52378-08
32 = BC-3500 No Transport/Stacker	=2-52378-09
34 = BC-3500 Canada (Cashcode)	=2-52378-10

DIGIT 6 = COIN ACCEPTORS

0 = None	= 2-52401-01
1 = Mechanical 25/50	= 4-50511-01
2 = Mechanical 0/50	= 4-50511-09
3 = Mechanical 25/0	= 4-50511-10
4 = Mechanical SBA $1	= 4-50511-22
5 = Mechanical SBA $1/25	= 4-50511-23
6 = Electronic CC 5/10/25 $1	= 4-50511-18*
7 = Electronic (NRI) SBA $1/25	= 4-50511-19
8 = Electronic (Mars 330) SBA $1/25	= 4-50511-21
9 = Electronic (Mars 330) CAN $1/$2	= 4-50511-24

* Can only be used with 25237804

DIGIT 7 & 8 = HOPPER COMBINATIONS

01 = 3 Hi-Cap 5/10/25	= 2-51870-05
02 = 3 Hi-Cap Token/$ Coin/25	= 2-51870-06
03 = 2 Hi-Cap 5/10/25, 1 Token/$/25	= 2-51870-08
04 = 1 Hi-Cap 5/10/25, 2 Token/$	= 2-51870-07
05 = 2 Hi-Cap 5/10/25m1 Hi-Cap CTA	= 2-51870-15
06 = 3 Hi-Cap CTA	= 2-51870-16

BC-3500 EXAMPLE:

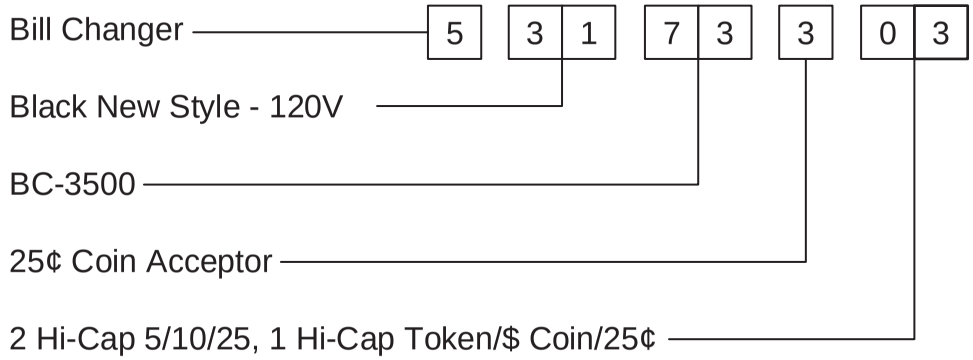

INTRODUCTION

This parts catalog lists replacement parts for the BC-3500. The purpose of this parts catalog is to locate and identify replaceable components and supply information on how to order them.

Catalog Description

This catalog is divided into major sections labeled with figure numbers, which correspond to the illustrations used. Some assemblies require more than one illustration to identify the parts. Each page has a sheet number to identify the sheet as part of that assembly's parts list.

Replacing parts that are welded or riveted onto an assembly is normally impractical. Therefore, replacement parts are not listed for these items. The assembly containing the welded or riveted part should be replaced.

Parts List Description

The parts list contains four columns:

- **Figure, Sheet, and Index Number** — The first entry in this column is the figure number of the corresponding illustration. An index number, when listed, corresponds to the index number appearing on the illustration. Index numbers are not used when items are listed for reference purposes only or when the item listed is an alternate part.
- **Rowe Part Number** — This column lists the part number to use when ordering replacement parts or making inquiries.
- **Description** — This column gives a word description of each part or assembly. Each item is indented to show its relationship to the next higher assembly.
- **Qty** — This column contains the part quantity used in the assembly. When a figure describes more than one model of an assembly, the "Qty" column is divided to show each model.

Ordering Replacement Parts

All replacement parts must be ordered directly from an Authorized Rowe® Distributor.

Once the replacement item has been determined, complete a Standard Parts Order Form (available from your Rowe® Distributor at no charge). Very often, parts orders are delayed because of inadequate or incomplete parts order forms. To enable prompt delivery, always specify the following information:

- Part Number and Description (indicate color, if applicable)
- Quantity Required
- Machine Model and Serial Number
- Complete Shipping Address, including the ZIP code
- Shipping Instructions must be supplied. If the shipping method is Parcel Post, Air Parcel Post, United Parcel Service, or Air UPS, and the packages may exceed the size and weight limits of these services, indicate an alternate shipping method.

If the shipment must be delivered as fast as possible, specify "Fastest Way". Rowe® will select the carrier for orders that justify shipment by truck.

Figure 6-1. Bill and Changer Assembly

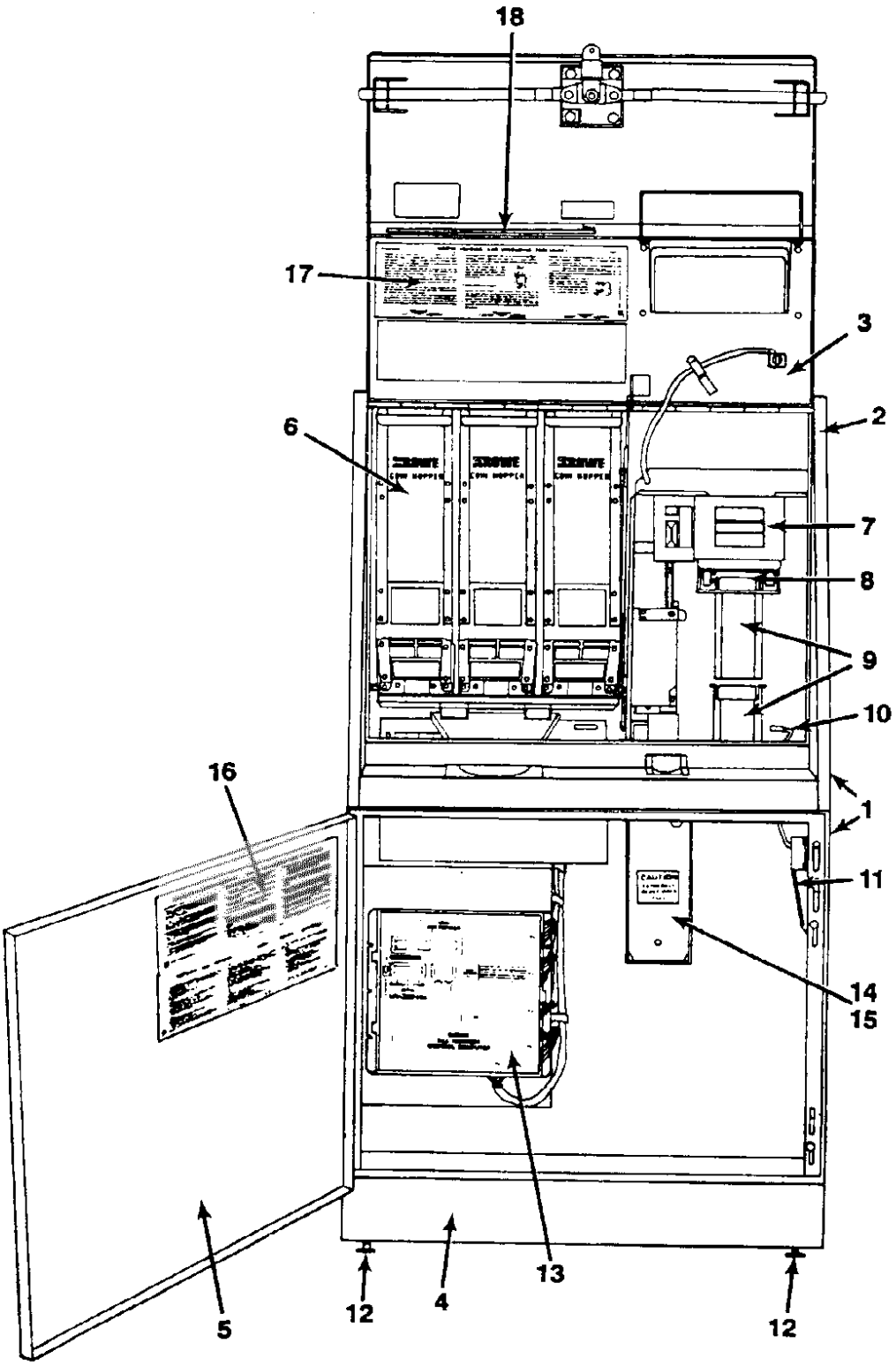

Figure 6-1. Bill and Changer Assembly

Ref.	Part No.	Description	Qty
	Ref.	BC-3500 Bill and Coin Changer Assembly	1
1	See Table 6-1	• Cabinet Assembly (Complete Upper and Base with Doors)	1
2	Ref.	• • Top Cabinet Assembly *(see Figure 6-2, Sheet 2)*	1
3	Ref.	• • • Front Door Assembly *(see Figure 6-3)*	1
4	Ref.	• • Base Cabinet Assembly *(see Figure 6-4)*	1
5	Ref.	• • • Base Door Assembly *(see Figure 6-4)*	1
6	Ref.	• Hi-Capacity Hopper Assembly *(see Figure 6-10)*	3
	65027608	• • Nickel, Dime, and Quarter Hopper	Ref.
	65027609	• • Quarter, Dollar Coin, and Token Hopper	Ref.
7	65068501	• Bill Acceptor Transport Assembly *(see Figure 6-5)*	1
8	65046804	• Dual Bill Stacker Assembly *(see Figure 6-12)*	1
9	45034603	• Bill Box Assembly	2
10	35065103	• Crank Assembly	1
11	25064401	• Tension Spring	1
12	25152301	• Adjustable Foot (shipped in the Accessory Bag)	4
13	65069058	• Control Computer Assembly *(see Figure 6-6)*	1
14	45054301	• Locking Coin Box Assembly	1
15	45054501	• Coin Box Support	1
16	35049309	• Service Label	1
17	35049711	• Hopper Service Label	1
18	27023902	• Hopper Brush	1
	25231312	• Accessory Bag Assembly (not shown)	
Items included in Accessory Bag Assembly (not shown)			
	25238801	• • Service Manual	1
	25165802	• • Hopper Identification Label	1
	25071701	• • Warning Label	1
	25081201	• • Coin Inlet Instruction Panel (Quarters Only)	1
	25061609	• • Coin Inlet Instruction Panel (Quarters Accumulative)	1
	25026501	• • Polyethylene Bag	1
	26598003	• • Shipping Damage Label	1
	27019601	• • Quality Card - BC	1
	25147001	• • Instruction Sheet	1
	00300100	• • Masking Tape - 3/4" Wide	1
	25231201	• • Accessories Bag (Plastic)	1
	25070232	• • BC-3500 Bill Insertion Label ($1 & $5)	1
	25070233	• • BC-3500 Bill Insertion Label ($1, 5, 10)	1
	25070234	• • BC-3500 Bill Insertion Label ($1, 5, 10, 20)	1
	27027204	• • Coin Block Bracket	1
	25081202	• • Instruction Panel	1
	47002004	• • “Pays $1 Coins” Label (BC-1200/3500)	1

Table 6-1. Replacement Cabinet Parts Numbers

Top Cabinet Assembly (without Door) See Figure 6-2, Sheet 1 and 2

65047002 Top Cabinet Weld Assembly - White
65047003 Top Cabinet Weld Assembly - Black

Front Door Assembly - See Figure 6-3

65047502 Door Assembly - Blue
65047503 Door Assembly - White
65047504 Door Assembly - Black

Front Door Weld Assembly - See Figure 6-3

65047302 Door Weld Assembly - Blue
65047303 Door Weld Assembly - White
65047304 Door Weld Assembly - IBM Black
65047310 Door Weld Assembly - Black – New Style

Base Cabinet Weld Assembly - See Figure 6-4

65049202 White
65049203 IBM Black

Base Cabinet Door Assemblies - See Figure 6-4

65049302 Blue
45016517 • Blue Door Weld Assembly
65049313 Walnut/Charcoal Brown
65049308 White
45016512 • White Door Weld Assembly
65049309 Black
45016516 • IBM Black

Standard Top Door

“New Style” Top Door

Figure 6-2. Top Cabinet Assembly

Sheet 1

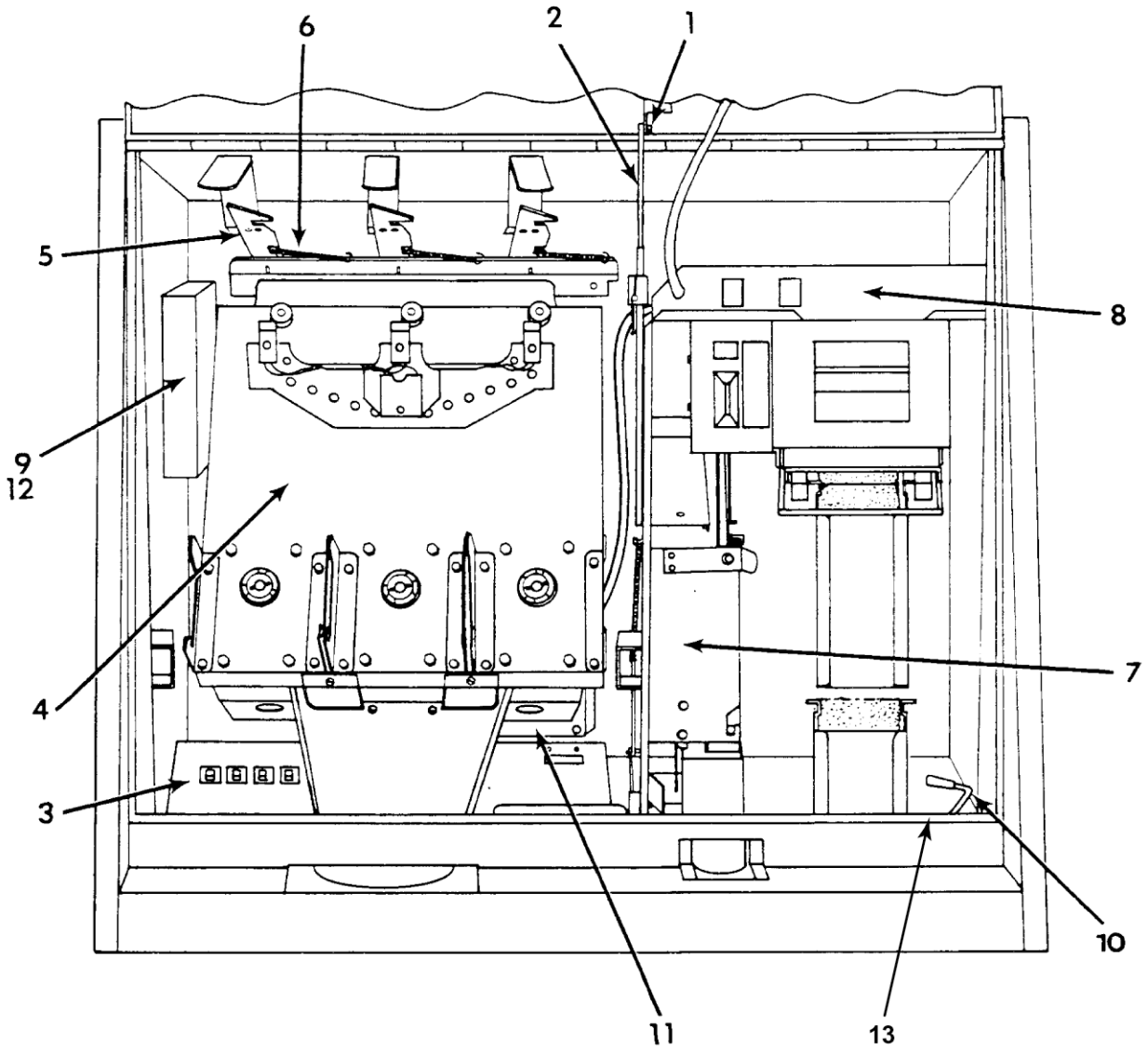

Figure 6-2. Top Cabinet Assembly (Sheet 1)

Ref.	Part No.	Description	Qty
	Ref.	BC-3500 Top Cabinet Assembly	
1	21357804	• Nut - Elastic Stop (1/4-20)	1
	70121408	• Spacer	1
2	35034406	• Door Support Assembly	1
	35032804	• • Pivot Bar Assembly	1
	35032905	• • Slide Bar Assembly	1
	25067903	• • Lever - Latch	1
	25067702	• • Torsion Spring	1
	25163201	• • Pivot Pin	1
	25067803	• • Pivot Plate	1
	70143002	• • External Retaining Ring	1
3	65042608	• Power Control Center Assembly *(see Figure 6-6)*	1
4	65027510	• Dispenser Assembly *(see Figure 6-8)*	1
5	45054201	• Hopper Latch Assembly	1
	45054101	• • Support Plate	1
	25156912	• • Shoulder Washer	3
	70121413	• • Spacer	3
	35074101	• • Lockbar Assembly	3
6	25181401	• • Tension Spring	3
7	35026111	• Bracket and Harness Assembly - Coin Acceptor *(see Figure 6-11)*	1
8	35025902	• Inside Panel Top Support	1
9	45050102	• Power Junction Box Assembly	1
	70097504	• • Contact	3
	70091511	• • Terminal Lug - Ring	1
	35047704	• • Power Junction Box	1
	70232204	• • Strain Relief	1
	21375902	• • Convenience Outlet	1
	30749102	• • Plug Housing (3 Circuit) P201	1
	70099201	• • Terminal	2
10	35065103	• Crank Assembly	1
	70239001	• • Protective Cap	1
	21402401	• • Spring - Handle Return	1
11	65067201	• Main Harness Assembly *(see also Figure 6-2, Sheet 2, Item 28)*	1
	70233103	• • Insulating Bushing - 1 5/8 inch Inside Diameter	2
12	25078403	• • Power Cord Assembly (120V)	1
	70093112	• • Cable Clamp - 1 3/8 Diameter	1
13	25161801	• Label - Door Crank	1

Figure 6-2. Top Cabinet Assembly

Sheet 2

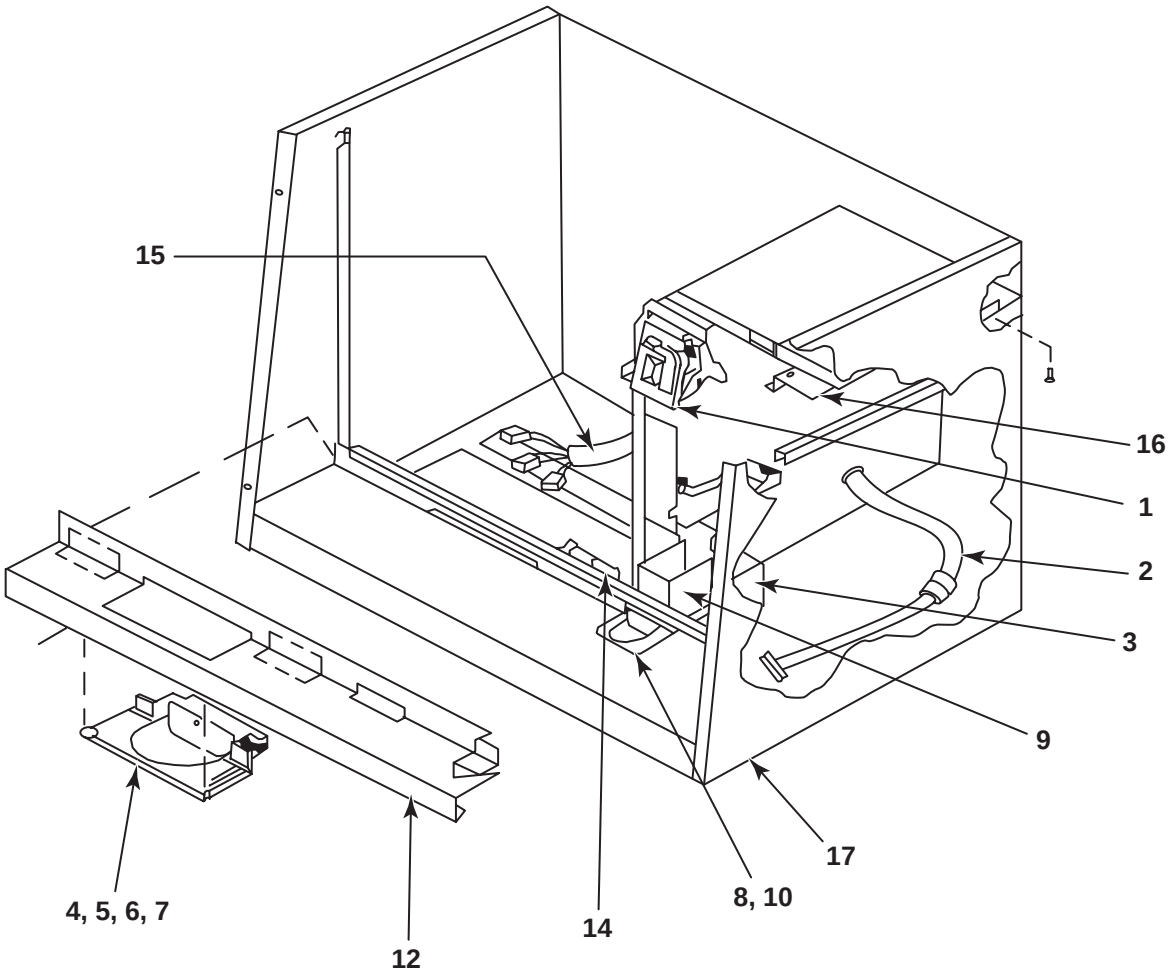

Figure 6-2. Top Cabinet Assembly (Sheet 2)

Ref.	Part No.	Description	Qty
	Ref.	BC-3500 Top Cabinet Assembly	
1	45016710	• Coin Inlet and Chute Assembly (5.5” wide)	1
	45016712	• Coin Inlet and Chute Assembly (3.5” wide)	1
2	35118801	• Harness Assembly - Transport	1
3	35074401	• Chute Assembly - Coin Box	1
4	65017101	• Coin Cup	1
5	35026801	• Change Door	1
6	25055701	• Hinge Wire	1
7	25144201	• Cover Plate (Coin Cup)	1
8	25144202	• Cover Plate (Slug Cup)	1
9	35032203	• Slug Chute Assembly (5.5” wide)	1
	35032203	• Slug Chute Assembly (5.5” wide)	1
10	45019001	• Slug Cup	1
11	25064301	• Slug Cup Door	1
12	45016203	• Front Trim (Cab Shelf)	1
13	89951604	• #4 x 1/4 Drive Screw	2
14	25050202	• Locking Wedge	1
15	65067205	Main Harness Assembly *(see also Figure 6-2, Sheet 1, Item 11)*	1
16	35023307	• Bill Acceptor Mounting Bracket	2
17	650470XX	• Top Cabinet *(reference - see Table 6-1)*	1

Figure 6-3. Front Door Assembly

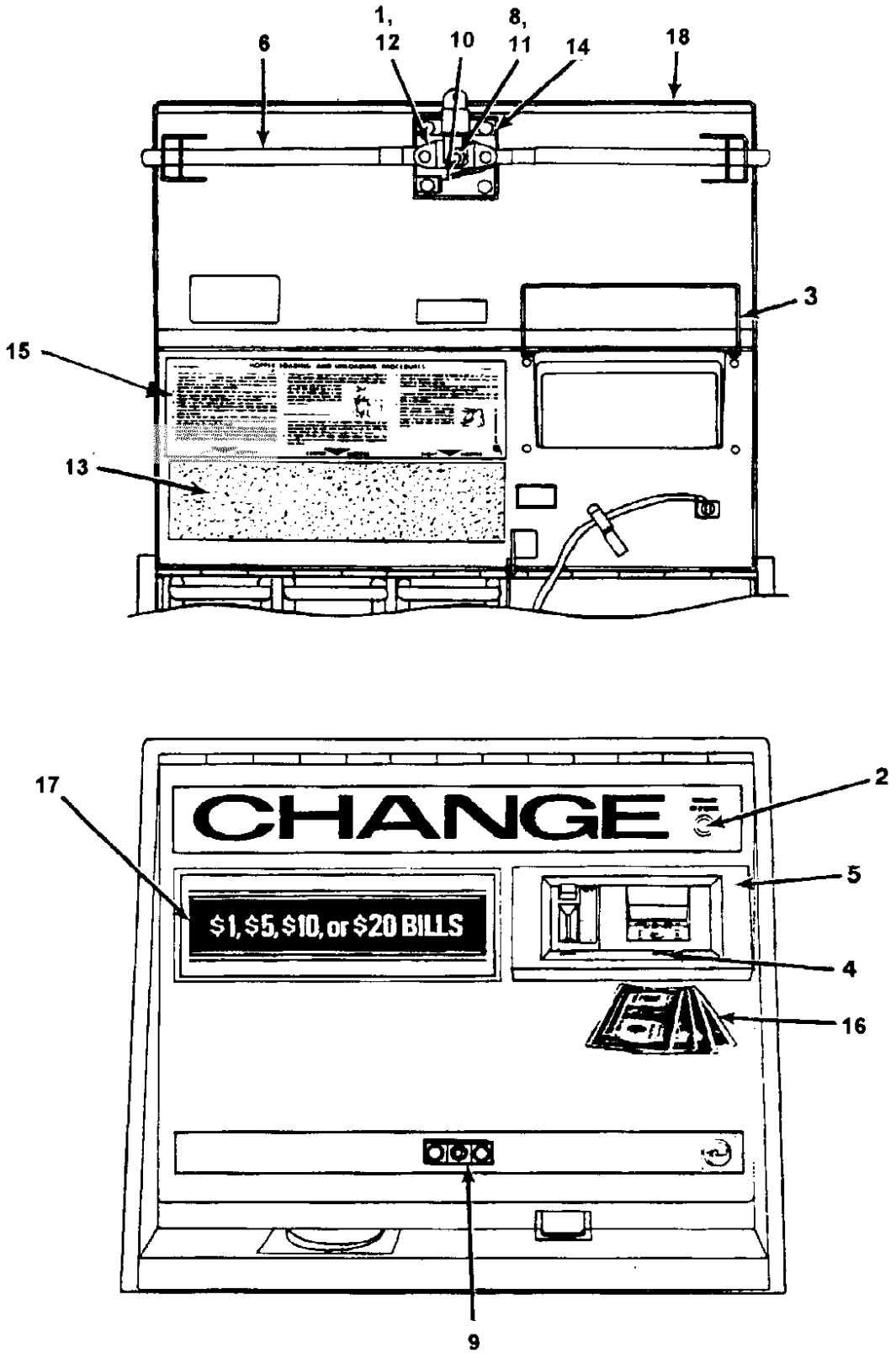

Figure 6-3. Front Door Assembly

Ref.	Part No.	Description	Qty
		Front Door Assembly *(see Table 6-1)*	
1	25053503	• Stop Bracket (Lock)	1
2	25191301	• Indicator Light & Clip	1
3	25111203	• Push Bar (Cash Box)	1
4	35032301	• Instruction Panel (Coins & Bills)	1
5	65015302	• Bill Acceptor Trim	1
6	35027706	• Lockbar Assembly	1
7	45062002	• T-Handle Assembly (without Lock and Keys)	1
8	25253501	• Spacer - T-Handle	1
9	70134103	Special Screw (10-24 x 3/4)	2
10	25064401	• Tension Spring	1
11	21357815	• 1/2-13 Elastic Stop Nut	1
12	35068302	• Lock Plate	1
13	2519001	• Pad - Sponge Rubber	1
14	25068301	• Lock Guard Assembly	
15	35049711	• Hopper Service Label	1
16		• Bill Insertion Label (shipped in Accessory Bag)	1
	25070232	• Bill Insertion Label ($1 & $5)	1
	25070233	• Bill Insertion Label ($1, 5, 10)	1
	25070234	• Bill Insertion Label ($1, 5, 10, 20)	1
17		• Bill Change Decal	
	Standard (Silver/Black for White/Black Doors)		
	35074331	• Change ID Decal ($1 & $5 Bill)	1
	35119904	• Change ID Decal ($1, $5, $10)	1
	35119905	• Change ID Decal ($1, $5, $10, $20)	1
	New Style		
	35119906	• Change ID Decal ($1 & $5 Bill)	1
	35119907	• Change ID Decal ($1, $5, $10)	1
	35119908	• Change ID Decal ($1, $5, $10, $20)	1
18	650473XX	• Door Weld Assembly (Front) *(see Table 6-1)*	

Figure 6-4. Base Cabinet Assembly

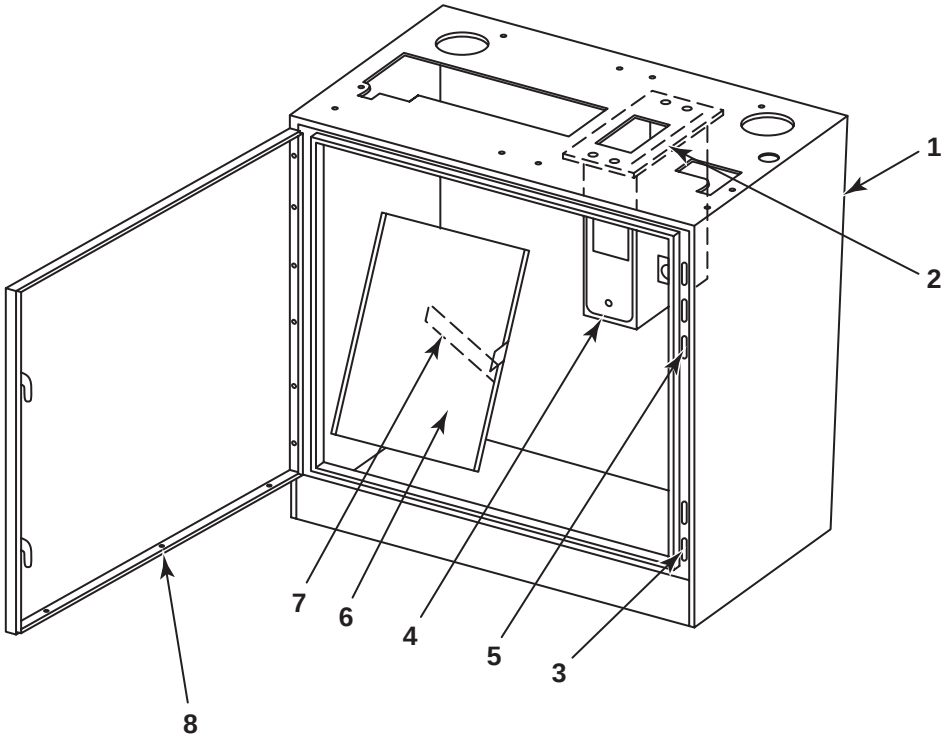

Figure 6-4. Base Cabinet Assembly

Ref.	Part No.	Description	Qty
		Base Cabinet Assembly *(see Table 6-1)*	
1	65049203	• Base Weld Assembly (Black)	
	65049202	• Base Weld Assembly (White)	
	65049204	• Base Weld Assembly (Charcoal Brown)	
2	45054501	• Support - Coin Box	1
3	20922502	• Spacer	2
4	45054301	• Coin Box Assembly (Locking) (also see below)	1
	45053301	• • Coin Box Assembly	1
	70162008	• • Lock Cylinder	1
	70166008	• • Lock Bolt - Straight	1
	25194401	• • Label - Coin Box (Part of 45054301)	1
5	35064901	• Latch Bar and Pin Assembly	1
6	65047401	• Mounting Panel (Computer Control)	1
7	35078101	• Mounting Support (Panel)	1
8		• Base Door Assembly *(see Table 6-1)*	

Figure 6-5. BA-50 Bill Acceptor Assembly

(Corresponding Parts List on page 6-18)

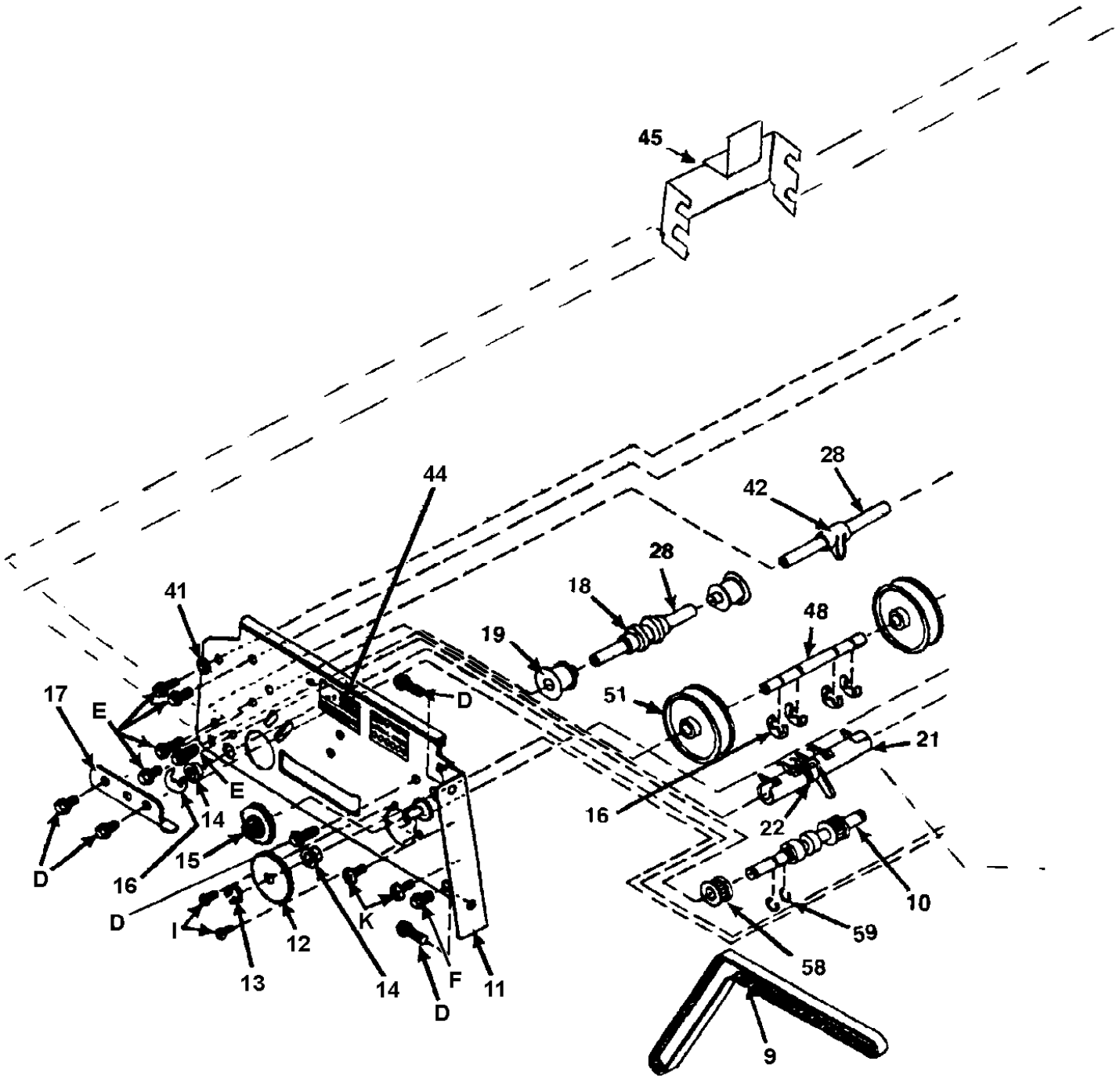

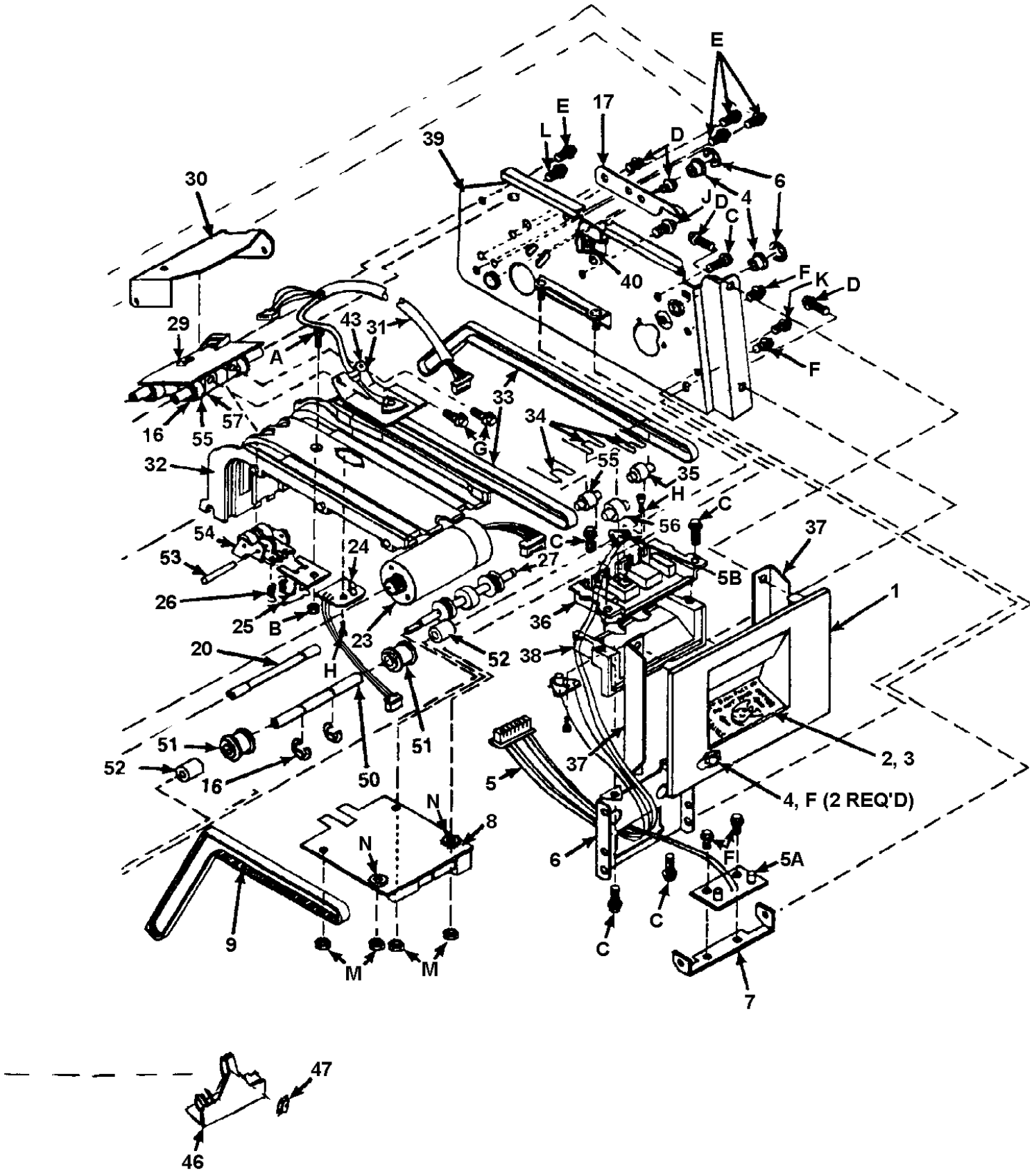
E
E
17
L
D
39
6
30
J
D
4
C
40
F
K
D
29
43
31
A
F
33
16
55
57
34
G
55
32
35
H
C
56
54
C
37
53
24
27
5B
26
1
25
B
36
23
20
52
38
H
51
51
2, 3
52
16
50
37
5
4, F (2 REQ'D)
N
8
N
6
F
5A
C
9
C
M
M
7
47
46

Figure 6-5. BA-50 Bill Acceptor Assembly (Sheet 1)

Ref.	Part No.	Description	Qty
	65068501	BA-50 Bill Acceptor	
1	65022401	• Trim - Front (Bill Acceptor)	1
2	30622102	• Window - Clear	1
3	35118901	• Insert - Window	1
4	21384701	• Retainer - Window	1
5	45073201	• Harness and Board Assembly with Inlet and LED's	1
	35119201	• • Circuit Board (with LED's)	1
	25236302	• • Photoconductive Cell (only)	1
	70035314	• • LED (only)	2
6	25076501	• Support Bracket	1
7	35119101	• Bracket - Legend Window	1
8	45073001	• Board Assembly - Interconnect	1
9	35082005	• Timing Belt (210-Tooth - .080 Pitch)	2
10	35114501	• Shaft and Pulley Assembly	1
11	35036003	• Plate Assembly - Side (LH)	1
12	35114401	• Drive Gear	1
13	70143801	• External Retaining Ring (1/4-Inch Diameter)	1
14	70146004	• Nyliner Bearing	4
15	B0031936	• Gear Reduction	1
16	70143004	• External Retaining Ring (1/4-Inch Diameter)	9
17	25194102	• Take-up Bracket (Roller Shaft)	2
18	25238902	Components:	
	25193402	• Shaft - Crowned Pulley	1
	25238902	• Output Roller (with Coupling)	1
	25193605	• Roller Creasing (with Coupling)	2
19	Ref.	Components:	
	35080003	• Pulley Shaft	1
	35080101	• Drum Pulley	2
20	Ref.	Components:	
	25196403	• Anti-Cheat Lever Shaft	1
	35096404	• Anti-Cheat Lever	1
	35081602	• Torsion Spring	1
21	Ref.	Components:	
	3508004	• Roller Shaft (Take-up)	1
	35080301	• Take-up Roller	2
	25243201	• Take-up Shaft Spacer	2
22	35113601	• Drive Shaft Assembly	1
23	45058408	• Motor Assembly with Encoder	1
24	45058205	• Harness and Board Assembly - Lower Reflector	1
	70035314	• • LED	1
	25236302	• • Photoconductive Cell	1
	25194803	• • Mounting Pad (TO18)	1
25	35114001	• Spring Bracket	1
26	25225003	• Tension Spring	2
27	Ref.	Components:	
A	25191702	• Pivot Pin	1
B	35080604	• Roller Assembly - Pressure (Mag. HD)	2
28	25193402	• Shaft - Crowned Pulley	1
29	45073101	• Head and Holder Assembly	1
30	35120201	• Cover - Mag. Amp (with Insulator)	1

Figure 6-5. BA-50 Bill Acceptor Assembly (Sheet 2)

Ref.	Part No.	Description	Qty
31	35118501	• Harness and Bracket Assembly - Mag. Amp	1
	25240801	• • Mounting Bracket Assembly (Sensor)	1
	21814009	• • Hex Lock Nut	1
	45073301	• • Harness & Board Assembly - Mag. Amp	1
32	65067101	• Track - Lower	1
33	35114901	• Drive Belt (Upper)	2
34	21342702	• Retaining Spring (Roller)	3
35	25235001	• Roller Shaft	3
36	65067501	• Bill Inlet (Upper)	1
37	25060101	• Bracket Side Shield	2
38	65067601	• Bill Inlet (Lower)	1
39	35035209	• Plate Assembly - Side (RH)	1
40	21398501	• Tension Spring	1
41	20922510	• Spacer	1
42	35126501	• Anti-Cheat Lever (Pull Back)	1
43	25079801	• Lug	1
44	25223101	• Flag Label	1
45	35104002	• Output Drive Guide	1
46	35147301	• Anti-Pullback Block	1
47	21776005	• Speed Clip Fastener (U Type)	1
48	35080003	• Pulley Shaft	1
49	35080101	• Pulley	2
50	35080004	• Roller Shaft (Take-Up)	1
51	35080301	• Take-Up Roller	2
52	25243201	• Shaft Spacer (Take-Up Roller)	2
53	25191702	• Pivot Pin	1
54	35080604	• Pressure Roller Assembly	2
55	25193301	• Crowned Roller	4
56	25193902	• Roller - Idler (Input)	1
57	70120915	• Washer	4
58	25192902	• Timing Pulley (22-Tooth)	1
59	70143301	• External Retaining Ring	2

HARDWARE LIST

A	80653006	#8-32 x 3/8 Hex HMS	1
B	87843000	#8-32 Keps Hex MS Nut	1
C	89293007	#8-18 x 7/16 Hex WRHS (Hi-Lo)	6
D	80443008	#8-32 x 1/2 Hex WRHMS (SF)	8
E	80443006	#8-32 x 3/8 Hex WRHMS (SF)	9
F	80443004	#8-32 x 1/4 Hex WRHMS (Hi-Lo)	7
G	89292307	#6-19 x 7/16 Hex WRHS (Hi-Lo)	2
H	89281605	#4-24 x 5/16 Phil Pan RO HS (Hi-Lo)	3
I	80542304	#6-32 x 1/4 Sems Phil RO HMS	2
J	80384405	#10-32 x 5/16 Phil Pan HMS (SF)	1
K	80403004	#8-32 x 1/4 Phil Pan HMS (SF)	3
L	80383006	#8-32 x 3/8 P.R. HMS (SF)	1
M	87842300	#6-32 Keps Hex MS Nut	4
N	88903000	#8 External Lockwasher	2
O	80443007	#8-32 x 7/16 Hex WHS (Swage Form)	2

Figure 6-6. Power Control Center Assembly

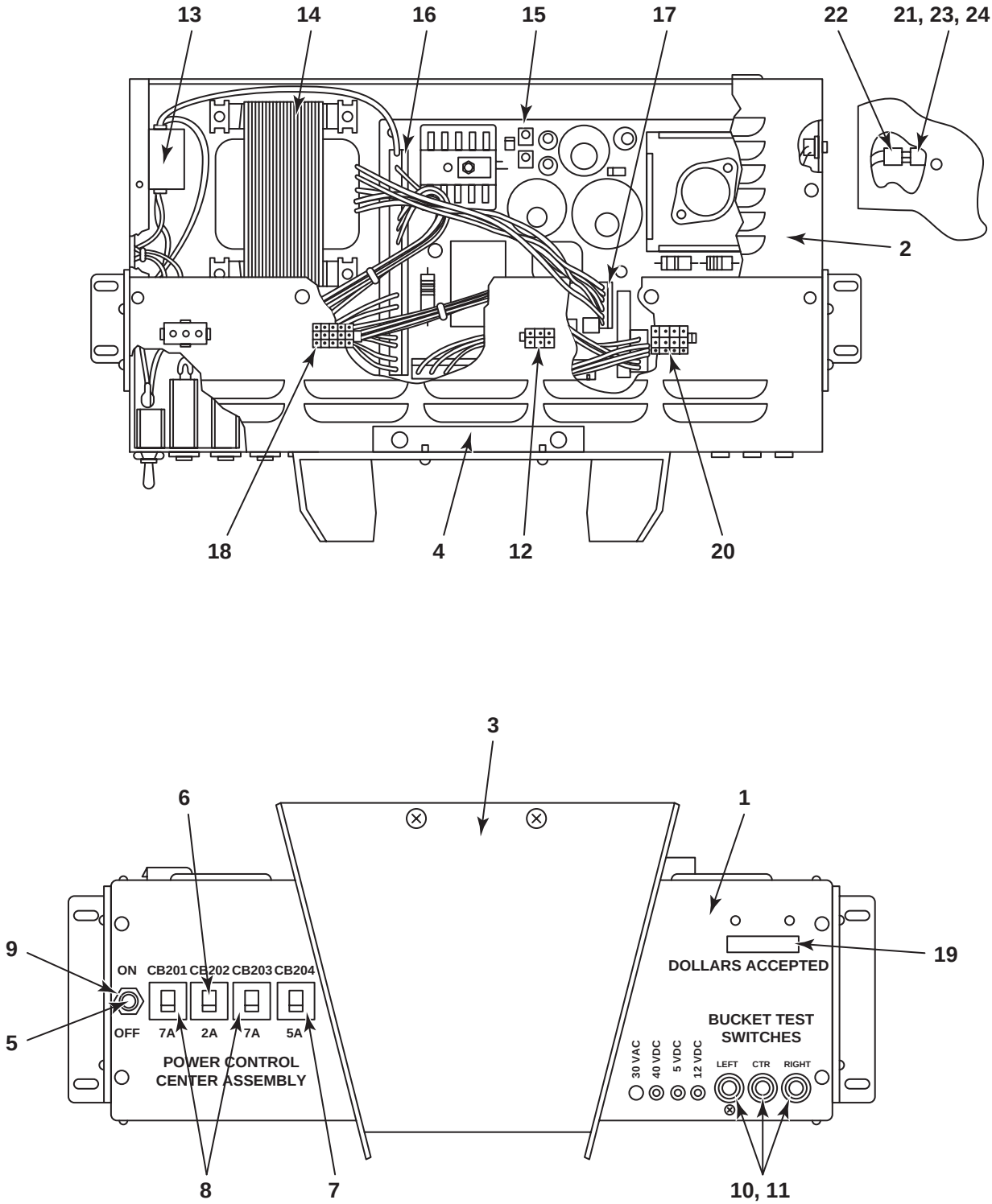

Figure 6-6. Power Control Center Assembly

Ref.	Part No.	Description	Qty
	65042608	Power Control Center Assembly - Dual	
1	65042408	• Power Control Chassis Assembly	1
2	45049901	• Power Control Box Cover Assembly	1
3	35073001	• Coin Chute Assembly	1
4	25181501	• Coin Guide Support	1
5	25077201	• Toggle Switch (SPST) (S201)	1
6	70073605	• Circuit Breaker - 2 Amp (CB202)	1
7	70073608	• Circuit Breaker - 5 Amp (CB204)	1
8	70073610	• Circuit Breaker - 7 Amp (CB201, CB203)	2
9	70122001	• Internal Tooth Lockwasher	1
10	Ref.	• Pushbutton Switch (part of CBA Assembly #65069203) *(see Schematic and Components List in Section 4)*	3
11	21638002	• Switch Cap	3
12	45074701	• Power Control Harness Assembly (6-Way Connector)	1
13	25152716	• Filter and Lug Assembly (includes Connector)	1
14	45049505	• Power Transformer Assembly (T201)	1
15	65069203	• Circuit Board Assembly - Power Supply *(see Schematic and Components List in Section 4)*	1
	35120801	• • Card Guide (not shown)	1
16	25239901	• Harness Assembly (7 Circuit)	1
17	25239801	• Harness Assembly (6 Circuit)	1
18	45074703	• Harness Assembly - Power Control Center (15-Way Connector included)	1
19	21441802	• • Electric Counter (part of 45074703 Harness)	1
20	45074702	• Harness Assembly - Power Control Center (12-Way Connector included)	1
21	70013001	• Resistor - MP930, 50 Ohm	1
22	25255901	• Harness Assembly Resistor - Control Circuit	1
23	21776101	• Rectangular Washer - 13/32 x 7/32	1
24	21520802	• Insulator, Mica TO-220	1

Figure 6-7. Control Computer Assembly

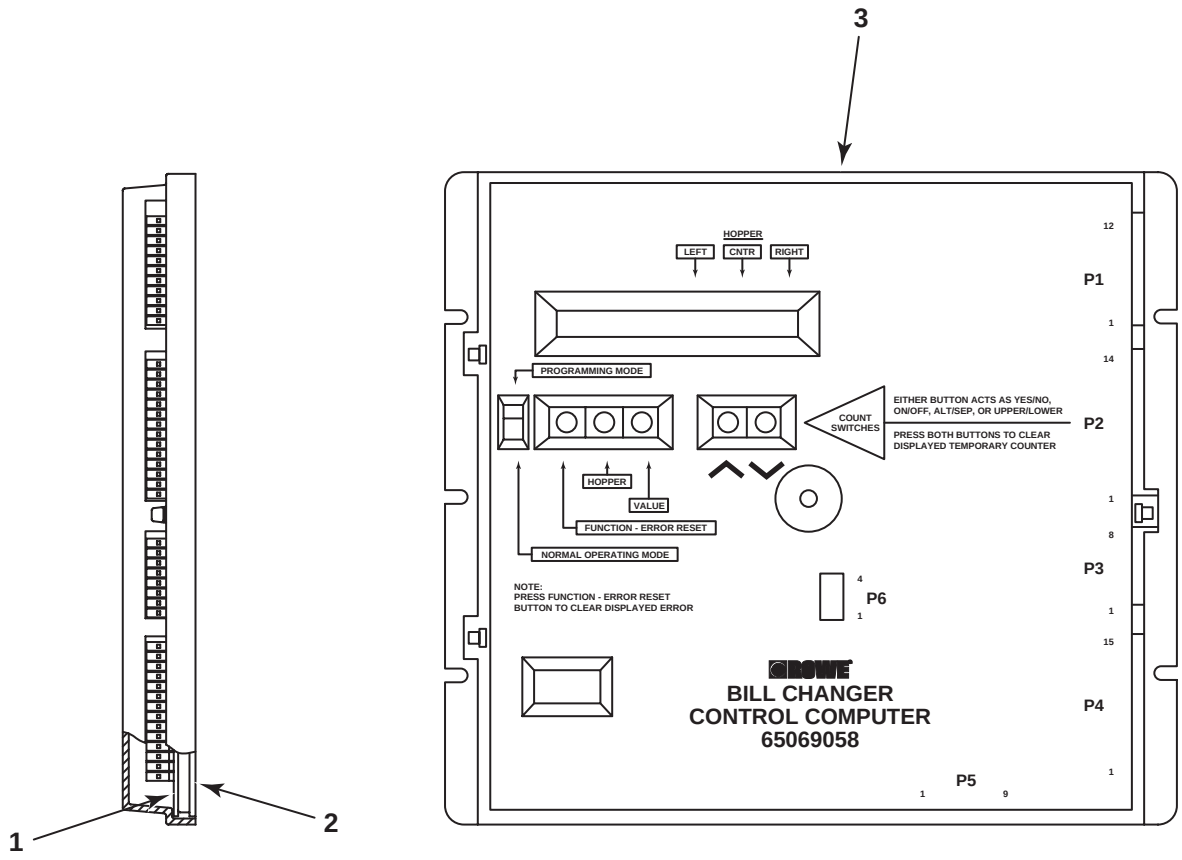

Figure 6-7. Control Computer Assembly

Ref.	Part No.	Description	Qty
	65069058	Control Computer Assembly	
1	65077458	• Control Computer Board Assembly	1
		(see Schematic in Section 4 for components)	
2	65069401	• Base Cover Assembly	1
3	65069308	• Cover	1

Figure 6-8. Coin Dispenser Assembly

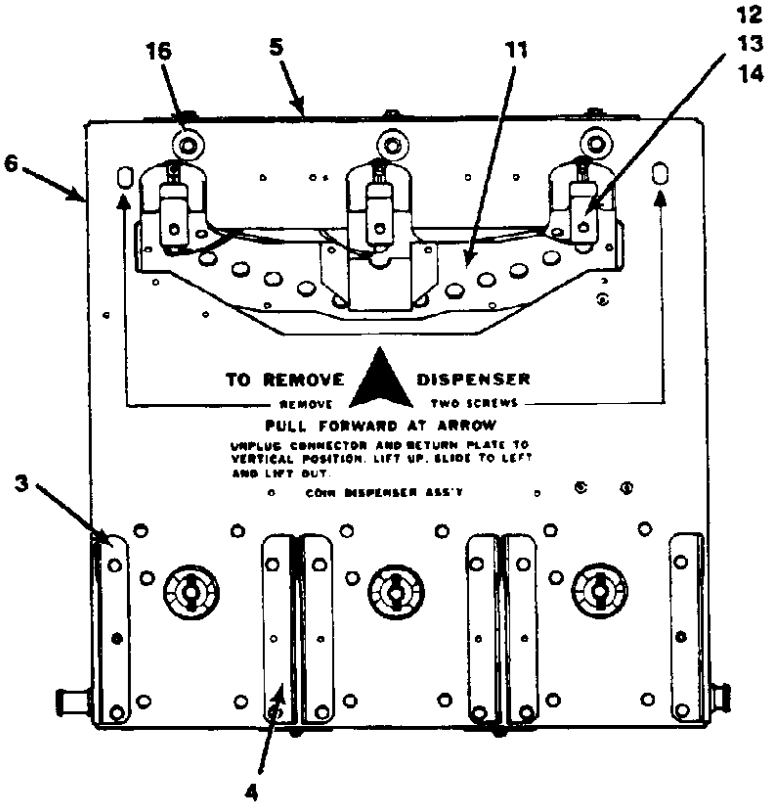

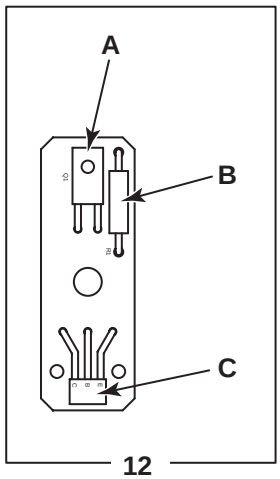

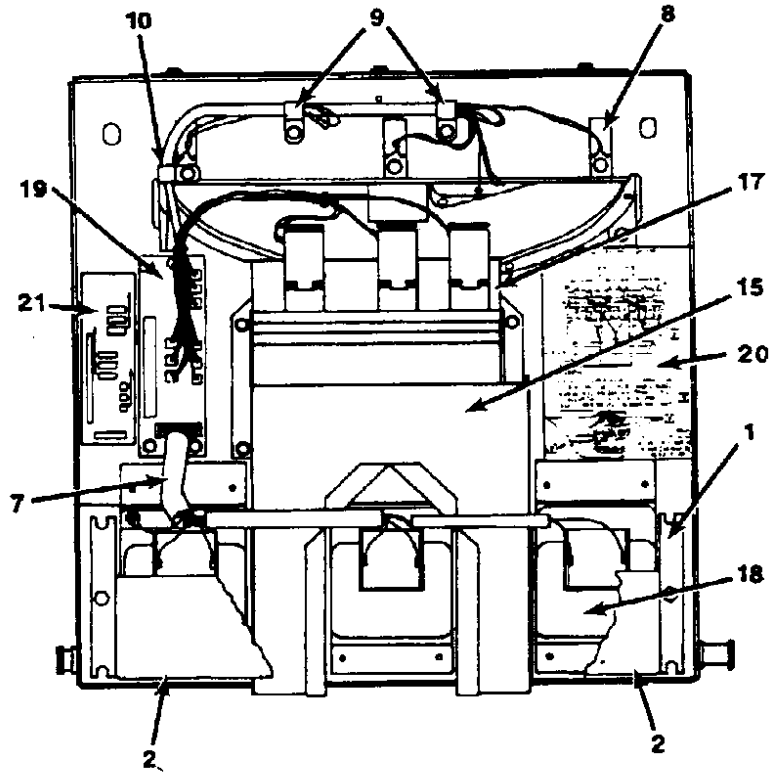

Figure 6-8. Coin Dispenser Assembly

Ref.	Part No.	Description	Qty
	65027510	Coin Dispenser Assembly (BC-3500)	1
1	35046401	• Mounting Bracket (Motor)	3
2	45042601	• Dispenser Motor Guard	1
3	35044702	• Mounting Bracket (Hopper LH)	3
4	35044802	• Mounting Bracket (Hopper RH)	3
5	35049201	• Hold-Down Plate	1
6	45035312	• Frame & Pivot Assembly	1
7	65029115	• Harness Assembly - Dispenser	1
8	45076101	• Holder Assembly - LED	3
	70035315	• • LED	3
9	70093103	• Cable Clamp	2
10	70093104	• Cable Clamp	1
11	45035001	• Coin Chute Assembly	1
12	25175702	• Photodetector Board and Terminal Assembly	3
A	70033101	• Phototransistor, NPN Side Looking	3
B	79901103	• Resistor, 10K 1/4W 5% CF	3
C	70030007	• Transistor, NPN 25V 100MA MPS6521	3
13	35048202	• Terminal Board Cover	3
14	70121626	• Spacer (Nylon)	3
15	35047601	• Dispenser Chute Assembly	1
16	25112701	• Rubber Bumper	3
17	45032615	• Change Bucket Assembly *(see Figure 6-9)*	1
18	35049102	• Motor Assembly	1
	45034102	• • Hopper Drive Motor	3
	37004601	• • Gear Box	1
	45034001	• • • Ratchet Coupling	3
	70110126	• • • Groove Pin (1/8 x 3/4)	3
	25097701	• • • Compression Spring	3
	70120904	• • • Washer (Nylon)	3
19	45076402	• Circuit Board Assembly - Interconnect	1
20	25163901	• Label - Dispenser Bucket Lube	1
21	25169106	• Label - Dispenser Wiring	1

Figure 6-9. Change Bucket Assembly

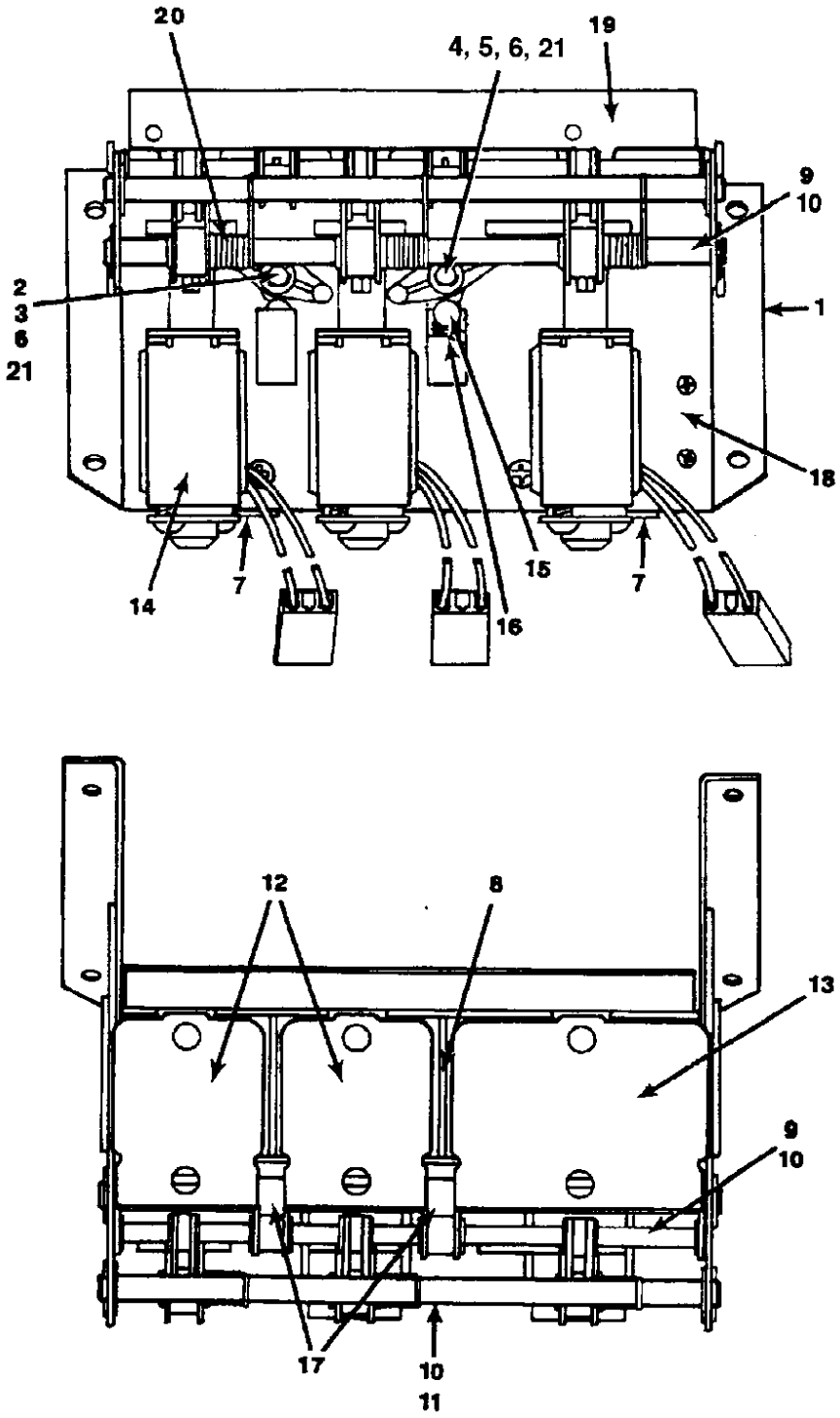

Figure 6-9. Change Bucket Assembly

Ref.	Part No.	Description	Qty
	45032615	Change Bucket Assembly	1
1	35045004	• Frame Assembly - Bucket	1
2	35045101	• Door Assembly - Diverter (LH)	1
3	25110001	• Toggle - Door (LH)	1
4	35045201	• Door Assembly - Diverter (RH)	1
5	25110101	• Toggle - Door (RH)	1
6	70143003	• External Retaining Ring	2
7	25112902	• Support Bracket	2
8	25098701	• Spacer Support	2
9	25099004	• Pivot Shaft (Door)	2
10	70143004	• External Retaining Ring	6
11	25099005	• Pivot Shaft (Door)	1
12	25158901	• Plunger and Door Assembly (Small Door)	2
13	25158902	• Plunger and Door Assembly (Large Door)	1
14	25232104	• Solenoid and Terminal Assembly	3
15	20746501	• Ball Bearing (1/4-Inch)	2
16	25099701	• Compression Spring	2
17	25098301	• Spacer Sleeve	2
18	35074801	• Plate Assembly - Front (Bucket)	1
19	25112402	• Mounting Bracket (Dispenser - Chute)	1
20	25112002	• Torsion Spring	3
21	70113005	• Roll Pin (.066/.069)	2

Figure 6-10. Hi-Capacity Hopper Assembly

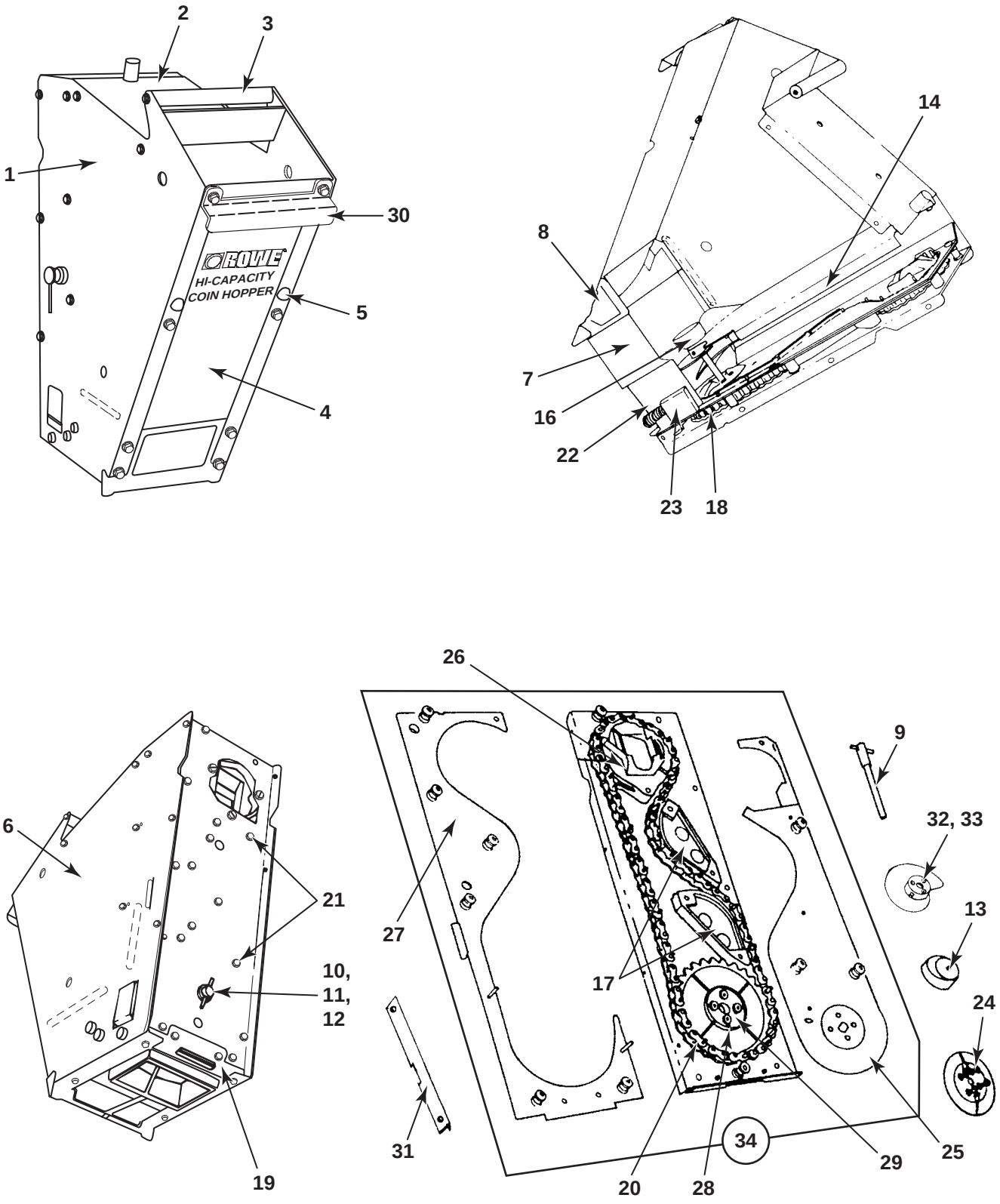

Figure 6-10. Hi-Capacity Hopper Assembly

Ref.	Part No.	Description	Qty
	65027608	Hi-Capacity Hopper Assembly (Quarter, Dime, Nickel)	Ref.
	65027609	Hi-Capacity Hopper Assembly ($ Coin, Quarter)	Ref.
1	45032402	• Side Assembly - LH	1
2	35074201	• Top Assembly - Large Hopper	1
3	25098101	• Bar Handle	1
4	35044608	• Front Cover Small Coins (Small Coins)	1
	35044609	• Front Cover Small Coins (Large Coins)	1
5	25114701	• Bumper	2
6	45032503	• Side Assembly - RH	1
7	65027902	• Fixed Funnel (Intermediate)	1
8	65027901	• Fixed Funnel	1
9	25113701	• Drive Shaft and Pin Assembly (Small Coins)	1
	25113702	• Drive Shaft and Pin Assembly (Large Coins)	1
10	70120903	• Washer	1
11	70121624	• Spacer	2
12	70146021	• Nylon Bearing	1
13	35058101	• Agitator Cam (Small Coins)	1
	35058102	• Agitator Cam (Large Coins)	1
14	45072101	• Coin Baffle and Stud Assembly (Small Coins)	1
	45072102	• Coin Baffle and Stud Assembly (Large Coins)	1
15	25224501	• Baffle and Bracket Assembly	1
16	70146006	• Nylon Bearing	1
17	35048501	• Chain Guide	2
18	35060501	• Plate and Post Assembly	1
19	35048801	• Tie Bracket	1
20	35043703	• Extended Pin Chain (Small Coins)	1
	35043705	• Extended Pin Chain (Large Coins)	1
21	70134109	• Special Screw (#8-32 Black)	2
22	25113401	• Compression Spring	2
23	65028202	• Sliding Funnel	1
24	45034205	• Agitator (Small Coins)	1
	45034204	• Agitator (Large Coins)	1
25	35144502	• Inner Guide Assembly (Small Coins)	1
	35044504	• Inner Guide Assembly (Large Coins)	1
26	65028803	• Chain Guide Ring	1
27	45031902	• Outer Slide Assembly (Small Coins)	1
	445031903	• Outer Slide Assembly (Large Coins)	1
28	45035601	• Sprocket	1
29	35017101	• Drive Spacer	1
30	25165902	• Hopper Handle	1
31	25223901	• Coin Ramp (Large Coins)	1
32	70113013	• Roll Pin (.099/.103 x 7/8)	1
33	25171202	• Upper Agitator Assembly (Large Coins)	1

The following assemblies include itmes 11, 12, 17, 18, 20, 21, 24, 25, 26, 27, 28, 29

34	47000601	• Coin & Chain Guide Assembly (Small Coins)	1
	47000602	• Coin & Chain Guide Assembly (Large Coins)	1

Figure 6-11A. Coin Acceptor Bracket and Harness Assembly (Mechanical)

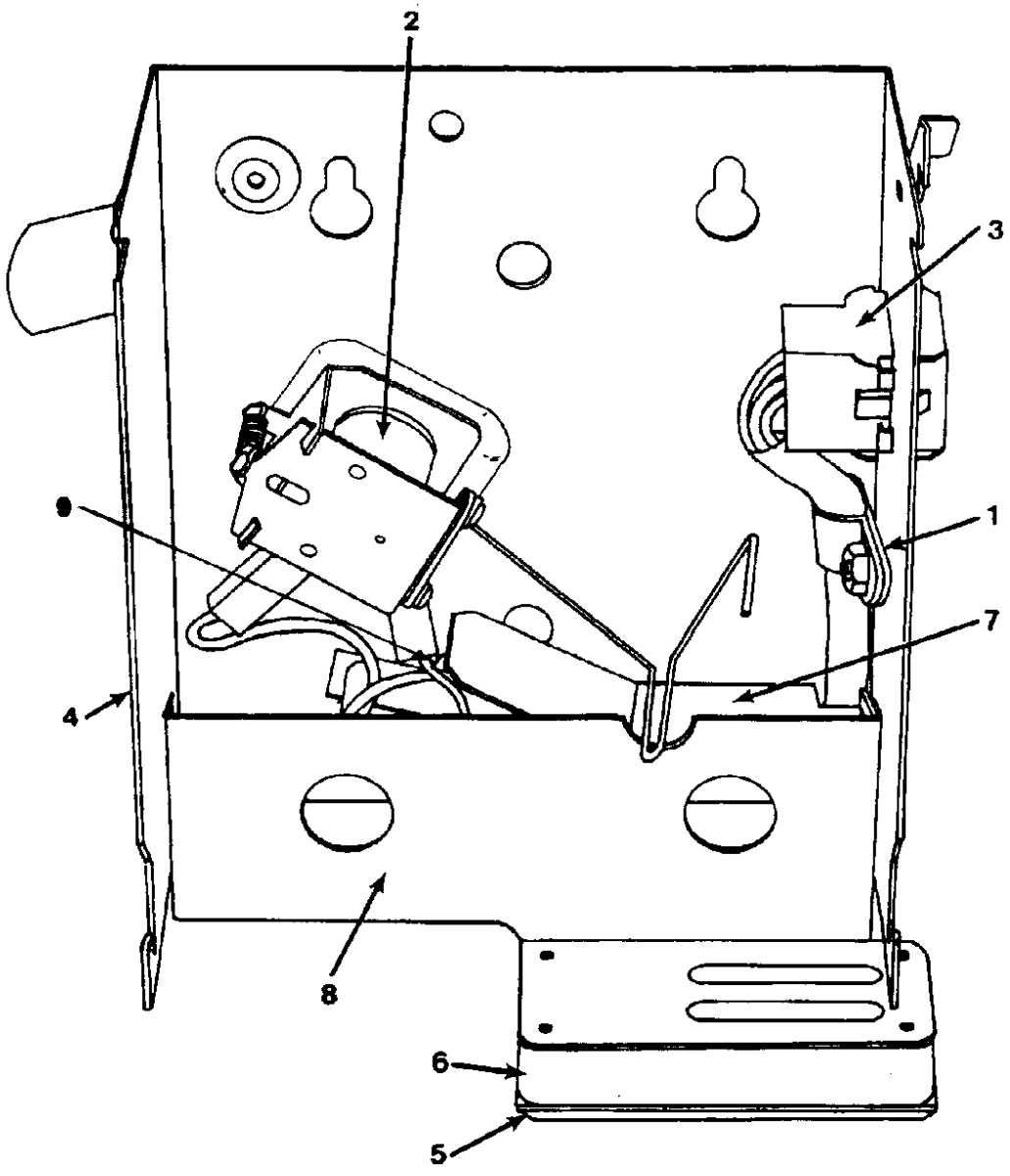

Figure 6-11A. Coin Acceptor Bracket and Harness Assembly (Mechanical)

Ref.	Part No.	Description	Qty
	35026111	Coin Acceptor Bracket and Harness Assembly (Quarters Only)	
1	70093104	• Cable Clamp	1
2	35031702	• Lockout Magnet (used with Imonex Acceptors)	1
	35031701	• Lockout Magnet (used with Coin Acceptors Inc. Mechanical Coin Acceptors)	1
3	35028208	• Coin Acceptor Harness and Plug Assembly	1
	30422517	• • Terminal Strip (3 Position)	1
	70035005	• • Silicon Diode (1N4004)	1
4	35031801	• Coin Acceptor Bracket and Lock Assembly	1
5	25171101	• Solid-State Coin Switch Cover	1
6	45048203	• Solid-State Coin Switch PCB Assembly	1
		(see Figure 4-8 for Schematic and Components List in Section 4)	
7	25163101	• Shield Bracket	1
8	35063001	• Mounting Bracket (Coin Switch)	1
9	70120019	• Washer	1

Coin Acceptors:

40861402	Coin Acceptor (Quarter only) (Imonex #965-41)
40861404	Coin Acceptor (Mechanical, SBA only) (Imonex #965-41 SBA)
40861405	Coin Acceptor (Mechanical, $1/25) (Imonex #965-41 SQ)

Also see *Table 1-1*

Figure 6-11B. Coin Acceptor Bracket and Harness Assembly (Electronic)

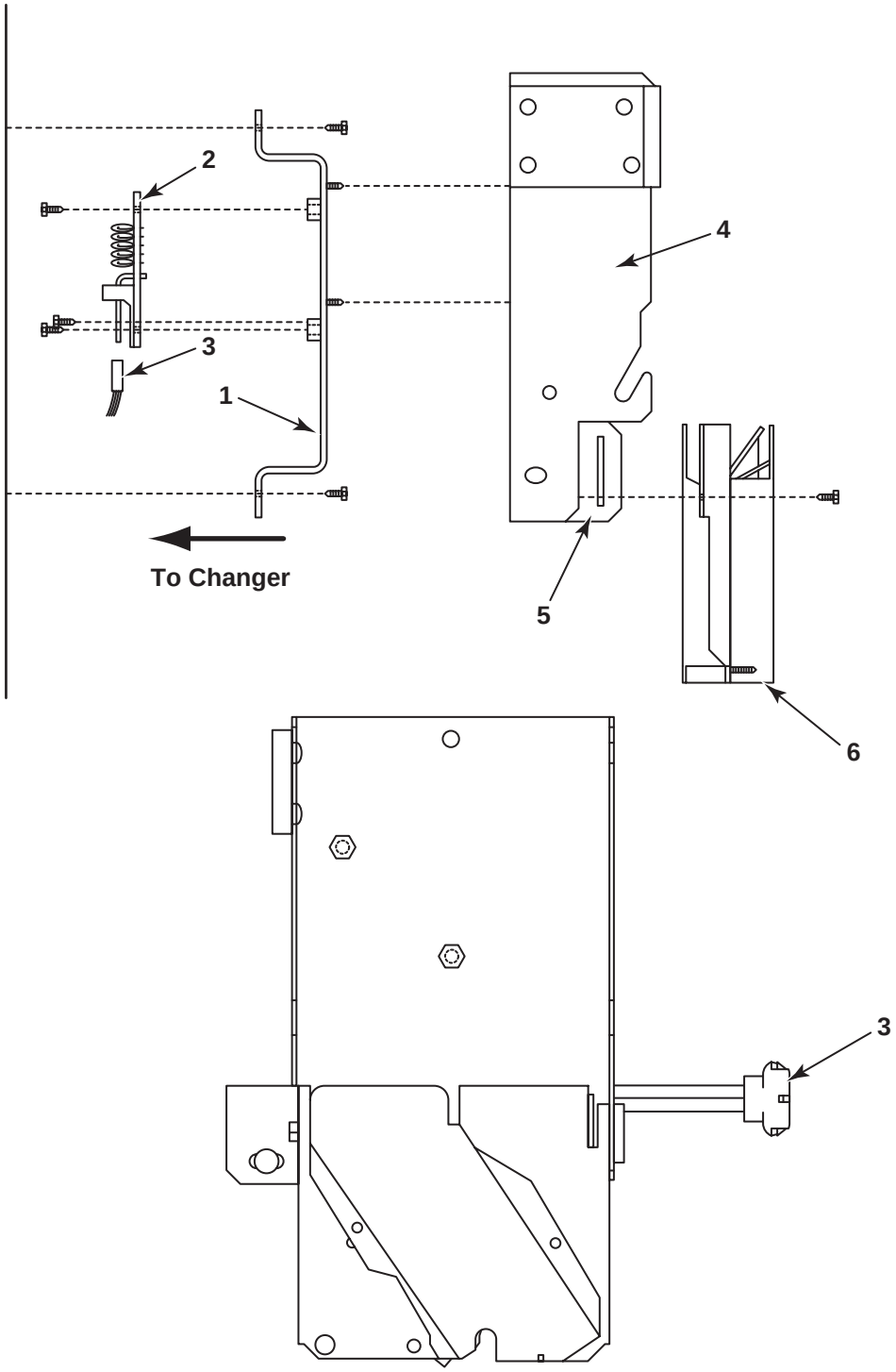

Figure 6-11B. Coin Acceptor Bracket and Harness Assembly (Electronic)

Ref.	Part No.	Description	Qty
	45051119	Coin Acceptor - NRI $1/25	
	45051121	Coin Acceptor - Mars 330 $1/25	
	45051124	Coin Acceptor - ME330 Can $1/$2	
1	45087702	• Bracket Assembly	1
2	35134401	• Circuit Board Assembly - Interface (NRI only)	1
3	35113301	• Harness and Plug Assembly - Min	1
	35028216	• • Adapter Harness - Mars Acceptor	1
	35028221	• • Adapter Harness - Mars Acceptor (Canada only)	1
4	30984404	• Holder Assembly	1
5	34006201	• Mounting Bracket - Coin Switch	1
6	30998701	• Chute Assembly Mini Adapter	1
	21408601	• • Harness - C120/NRI Acceptor (only) (not shown)	1

Coin Acceptors:

65044404	NRI G-13 $1/25
65044405	Mars ME330 $1/25¢

Figure 6-12. Dual Bill Stacker Assembly

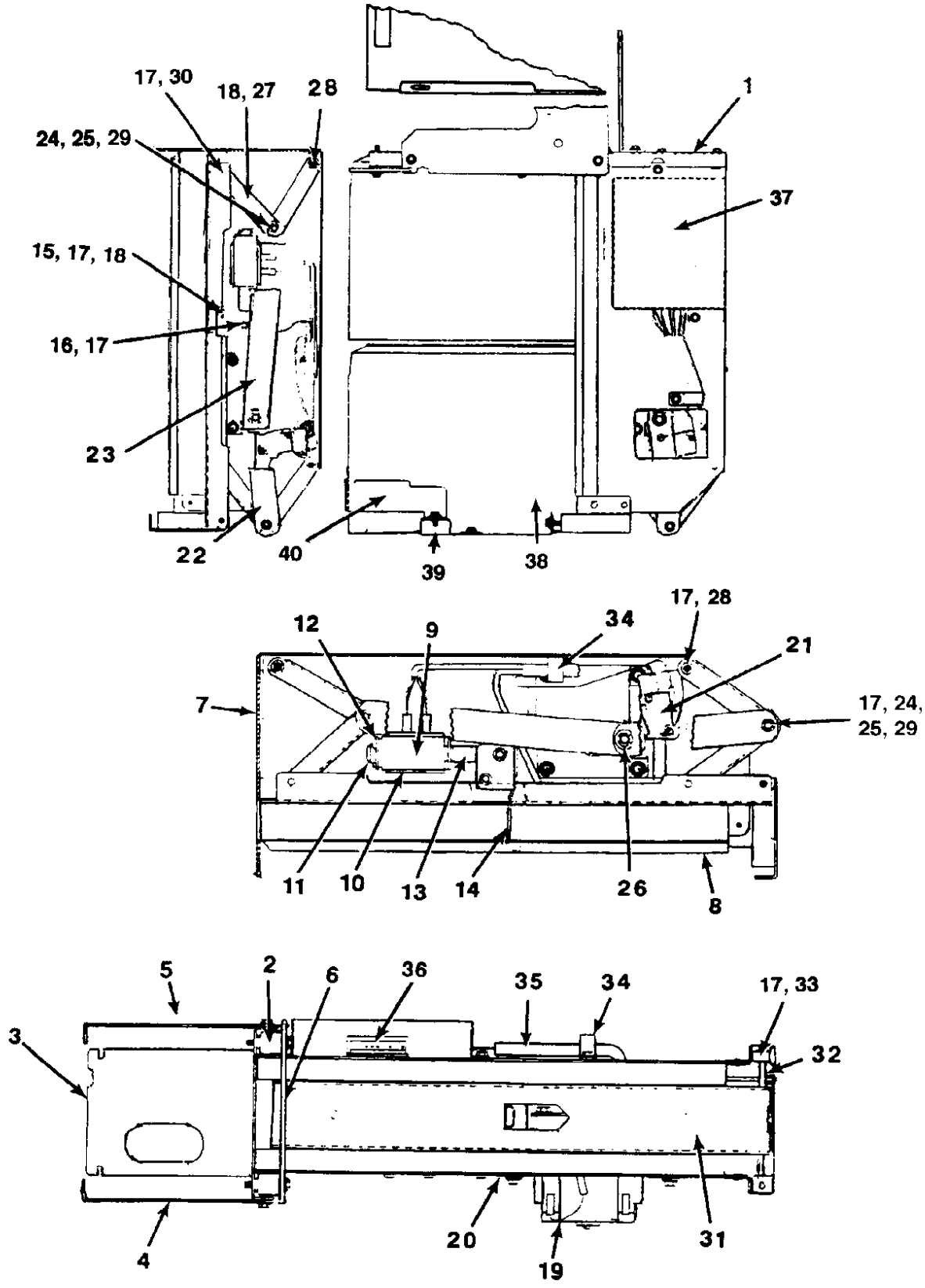

Figure 6-12. Dual Bill Stacker Assembly

Ref.	Part No.	Description	Qty
	65046804	Dual Bill Stacker Assembly	
1	45052501	• Support Frame	1
2	25156911	• Shoulder Washer	6
3	35072001	• Rear Hanger	1
4	35072101	• Front Hanger	1
5	45082202	• Front Hanger (RH)	1
6	25178401	• Bill Box Catch	1
7	45052601	• Separator Chute Assembly	1
8	35072801	• Chute Edge	2
9	21150509	• Solenoid Assembly	1
10	25178501	• Solenoid Bracket	1
11	25158001	• Stop Assembly	1
12	25098403	• Solenoid Stop Plate	1
13	25178601	• Solenoid Plunger Assembly	1
14	25178701	• Bill Stop	1
15	25178801	• Bill Stop Pivot	1
16	21534705	• Pivot Pin	1
17	70143003	• External Retaining Ring	4
18	70146003	• Bearing	19
19	35072201	• Motor and Crank Assembly	1
	45052901	• • Gear Motor	1
	25179701	• • Crank and Pin Assembly	1
	70113204	• • Spiral Pin	1
20	35072301	• Motor Mounting Plate	1
21	35099701	• Switch Assembly	1
	25179001	• • Switch Plate	1
	21073102	• • Switch	1
	21082901	• • Switch Actuator	1
	21083001	• • Twin Nut	1
	25054801	• • Insulator	1
22	35072401	• Drive Link	1
23	35072402	• Drive Link	1
24	70146004	• Bearing	2
25	70146010	• Bearing	2
26	70143004	• External Retaining Ring	1
27	25179101	• Push Plate Link	4
	70146003	• • Bearing	16
28	25179202	• Support Shaft	2
	70143003	• • External Retaining Ring	8
29	21534706	• Pivot Pin	2
	70143003	• • External Retaining Ring	4
30	21534707	• Pivot Pin	2
	70143003	• • External Retaining Ring	4
31	35072501	• Push Plate	1
32	25179501	• Roller Shaft	1

Figure 6-12. Dual Bill Stacker Assembly (continued)

Ref.	Part No.	Description	Qty
33	25179601	• Roller	2
	70143003	• • External Retaining Ring	6
34	70093401	• Cable Clamp	2
35	45052401	• Harness Assembly - Bill Stacker	1
	70075508	• • Connector Housing (8 Circuit) (J502)	1
	70075601	• • Contact - Post	6
	70075701	• • Keying Plug	1
	70096701	• • Receptacle - Straight	4
	70091302	• • Terminal Lug - Slip-On	6
36	65046701	• Driver Circuit Board Assembly *(see Schematic and Components List in Section 4)*	1
37	45052701	• Circuit Board Cover	1
38	45034603	• Cash Box Assembly	2
39	45070502	• Bill Box Assembly	1
	25096101	• Foam Block	2
	35039204	• • Pressure Plate Assembly	2
40	45052801	• Lower Bill Box Mounting Bracket	1
41	25181801	• Lower Bill Box Stop and Stud Assembly	1

This page intentionally left blank.

Figure 6-13. Coin Inlet and Chute Assembly with Reject Button

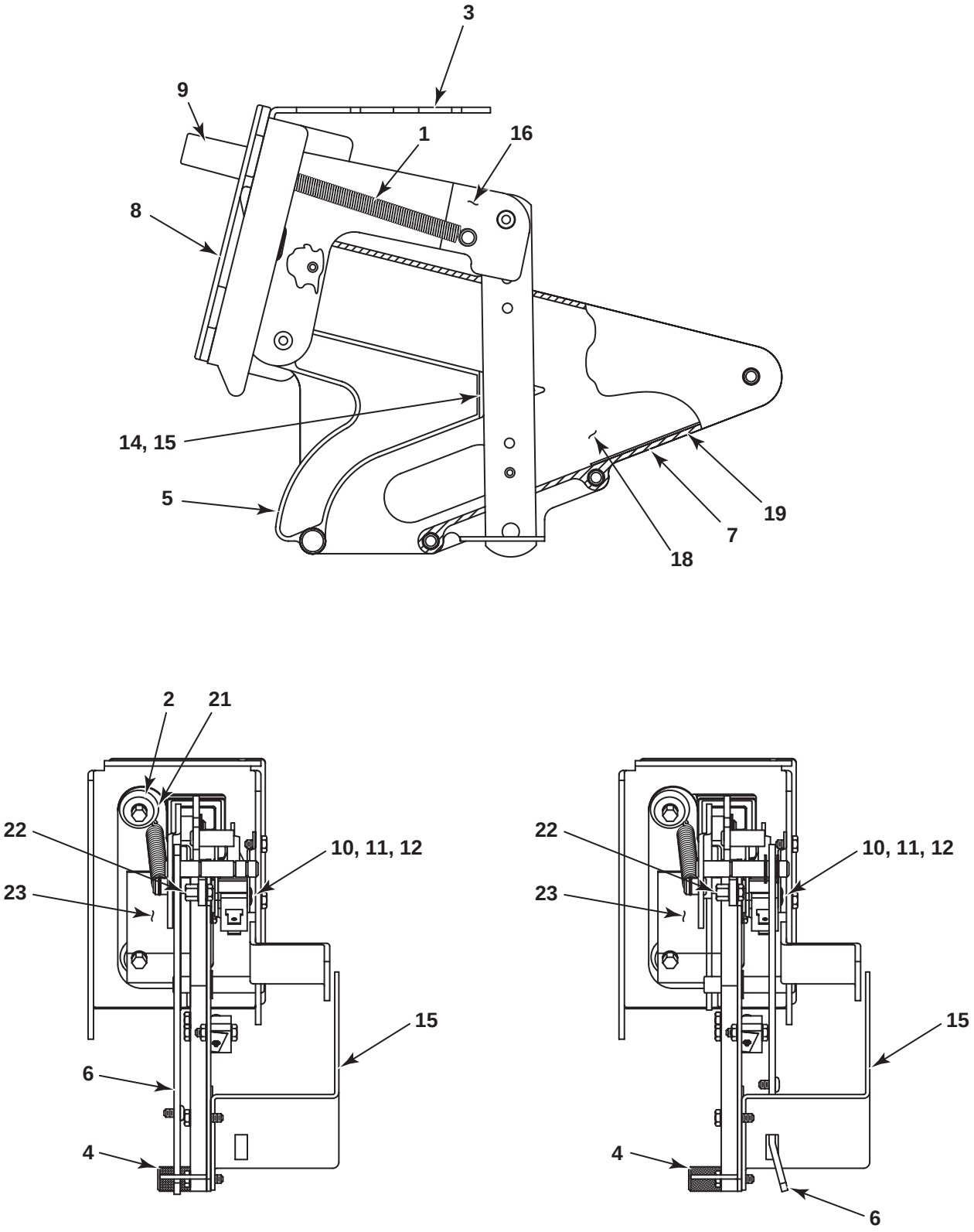

Figure 6-13. Coin Inlet and Chute Assembly with Reject Button

Ref.	Part No.	Description	Qty
	45016710	Coin Inlet and Chute Assembly	
	45016712	CTA Inlet and Chute Assembly	
1	21325101	• Tension Spring	1
2	21301801	• Washer - Cup	2
3	25057102	• Coin Chute Bracket (Upper)	1
4	70134501	• Thumbscrew (#6-32)	1
5	25161401	• Coin Chute Clean-Out	1
6	25160201	• Scavenge Lever Link	1
7	35031202	• Coin Chute	1
8	45013401	• Coin Inlet Trim	1
9	25056503	• Reject Button and Blade Assembly	1
10	21083001	• Twin Nut	1
11	25052902	• Reject Switch Bracket	1
12	25255801	• Lever Switch - Micro SPDT 1.6	1
13	25147901	• Blade Holder	1
14	25148001	• Blade	1
15	25063302	• Coin Chute Support Bracket	1
16	25161601	• Reject Actuator Assembly	1
17	35031302	• Coin Chute Back	1
18	35026001	• Coin Acceptor Bracket Assembly	1
19	70212403	• Cork Composition Strip	1
20	70143004	• External Retaining Ring	2
	70143004	• External Retaining Ring	4
21	70091702	• Solder Lug	1
22	70121902	• Hex Spacer (Nylon)	1
23	27027201	• 50¢ and $1.00 Coin Block Bracket	1

ACCESSORY KITS

35080605	Nylon Pressure Roller Assembly - 2 required (used when metal contamination of bills affects performance)
25061602	Coin Inlet Instruction Panel (Quarter and Dollar Coin)
25061603	Coin Inlet Instruction Panel (Dollar Coin)
25081202	Coin Inlet Instruction Panel (No Coins)
27031501	Armor Plate Kit
25223401	National Keyset Lock Cylinder & Key
25223402	Van Lock Cylinder & Key
25223403	Chicago Flexace Lock Cylinder & Key
25223404	Abloy Lock Cylinder & Key
25223405	Medeco Lock Cylinder & Key
25223405	Tubar Lock Cylinder & Key
27023701	Coin Inlet Kit for Undersize Coins
27023902	Nylon Hopper Brush
27027201	Coin Block Bracket (50¢ & S.B.)
27029801	Coin Block Bracket Kit (Complete)
27028601	Bill Acceptor Front Trim Shield Kit (Deters Insertion of Junk)
27031801	Cover Kit - Bill Acceptor (for Dust, etc.)
37004001	Decal - Tokens
37004102	Coin Hopper Cover Kit (High-Capacity)
45062001	Medeco T-Handle Assembly (w/Medeco Lock Cylinder & Security Plate)
45062002	Medeco T-Handle Assembly (No Lock Cylinder)
47002001	Decal Kit
65050501	Sign Kit - White (Change)
65050503	Sign Kit - White (Tokens)
27033501	Touch-up Paint - Dark Camel Tan
27033503	Touch-up Paint - White
27033504	Touch-up Paint - Blue
27033505	Touch-up Paint - Charcoal Brown

REPAIR KITS AND SPARE PARTS

27020302	Motor Armature Assembly (Multi-Products)
27023302	Motor Brake Pawl (Multi-Products)
37004601	Hopper Motor Gear Case Assembly (Heavy Duty)
47002201	Gear Case - Hopper Motor
27025801	Bucket Solenoid Plunger Kit (Small Bucket)
27025802	Bucket Solenoid Plunger Kit (Large Bucket)
27035901	Hopper Baffle Kit - High-Capacity (Quarters, Dimes, Nickels)
27035902	Hopper Baffle Kit - High-Capacity (Quarters, $ Coins, Tokens)