HAMMER DX
Service Manual

STOP

- •Read the manual before operating this machine.
- •Keep this manual for your reference.

ANDAMIRO®
ENTERTAINMENT

PRECAUTIONS FOR USE

The following safety precautions are given throughout this manual. They must be strictly followed to protect those who install, use or maintain this product as well as to protect players, visitors and property.

Be sure to read the following

For safty reasons.

• **The following suggestions should be adhered to:**

⚠ WARNING
Disregarding could result in serious injury.

⚠ CAUTION
Disregarding could result in injury or product damage.

• **The following graphic suggestions describe the types of precautions to be followed.**

⚠
Indicates a care should be taken.

⃠
Forbidden.

Indicates a matter which must be performed.

• **Precautions to be followed:**

Certain procedures require a qualified in-shop maintenance person or industry specialist. For such instructions, a qualified person must take care of the jobs.

- Otherwise an electric shock, machine trouble, or a serious accident may result.
- Replacing the machine parts, inspecting and maintaining the machines, and troubleshooting must be assigned only to a qualified in-shop maintenance person or industry specialist. This booklet gives instructions that hazardous jobs in particular must be handled by an industry specialist. Qualified in-shop maintenance person and industry specialist are defined as follows.

Qualified in-shop maintenance person

- A service staff shall have experience in operations of game machines. The staff shall be responsible for assembly, installation, inspection and maintenance of the machine.

Industry specialist

- An industry specialist must be engaged in designing, manufacturing, inspecting and servicing amusement machines. He or she must have an education in electrical, electronic and mechanical engineering, and routinely maintain and repair amusement machines.

PRECAUTIONS FOR USE

Setting Up

⚠ WARNING

Be sure to consult an industry specialist when setting up, moving or transporting this product.

- This product should not be set up, moved or transported by any one other than an industry specialist.
- When installing this product, set the 4 leg levelers evenly on the floor and make sure that the product is installed stably in a horizontal position. Unstable installation may result in injury or accident.
- When installing this product, do not apply undue force on movable parts. Otherwise, injury and accident may result, or the product may be damaged.

The machine for indoor usage only does not install outside.

Do not set the game machine up near emergency exits.

Protect the game machine from:

- Rain or moisture.
- Direct sunlight.
- Direct heat from air-conditioning and heating equipment, etc..
- Hazardous flammable substances.
- Otherwise an accident or malfunction may result.

Do not place containers holding chemicals or water on or near the game machine.

Do not place objects near the ventilating holes.

Do not bend the power cord by force or place heavy objects on it.

Never plug or unplug the power cord with wet hands.

Never unplug the game machine by pulling the power cord.

⚠ CAUTION

Be sure to use indoor wiring within the specified voltage requirements. For extension cord, use the specified rating or more.

Be sure to use the attached power cord.

Never plug more than one cord at a time into the electrical receptacle.

Do not lay the power cord where people walk through.

Be sure to ground this product.

Do not exert excessive force when moving the machine.

For proper ventilation, keep the game machine 100mm(4 ″) away from the walls.

Do not alter the system related dipswitch settings.

PRECAUTIONS FOR USE

Operation

⚠ WARNING

If there is any abnormality such as smoke, bad smell or abnormal noise being emitted from the machine, immediately turn OFF the main power switch and unplug the power cord from the receptacle to stop operating it.

- Using the machine in abnormal conditions could result in fire or accidents.

In case of abnormality

1. Turn OFF the main power switch.
2. Unplug the power cord from the receptacle.
3 . Contact your nearest dealer.

Do not leave the power cord plugged in improperly or covered with dust.

- Doing so could result in electrical shock or fire, so inspect the power cord periodically.

⚠ CAUTION

Do not use this product anywhere other than industrial areas.

- Using in a residential area or an area next to a residential area could affect signal reception of radios, television sets, telephones, etc..

- Do not give shock the surface of glass products.

- Please do not play this game if
  - When you do drinking;
  - When your physical condition is not normal;
  - When you are in pregnancy;
  - When you have on a pulse controller;
  - When you have recently experienced a cramp or fainting away while watching TV.
- Avoid excessive force/shock while playing/moving the game.
- While do games, pay attention to surrounding.

Do not plug or unplug the power cord with wet hands.

In handling the power cord, follow the instructions below.

- Do not damage the power cord.
- Do not bend the power cord excessively.
- Do not heat the power cord.
- Do not bind the power cord.
- Do not sandwich the power cord.
- Do not modify the power cord.
- Do not twist the power cord.
- Do not pull the power cord.
- Do not stand on the power cord.
- Do not drive a nail into the power cord.

If the power cord or power plug becomes damaged, stop using the machine immediately and ask your nearest dealer to replace the parts.

PRECAUTIONS FOR USE

Inspection and cleaning

⚠ WARNING

Be sure to turn OFF the main power switch and unplug the power cord from the receptacle before inspecting or cleaning the machine.

When replacing parts, be sure to use parts of the correct specifications. Never use parts other than the specified ones.

Opening inside the machine shall be done by machine specialist only as high electric current is being sent inside. For game machine with monitor, a care should be taken while opening its back door. If not, a damage to the inside parts or the monitor may occur.

If the sub power switch of the service panel is turned OFF without turning OFF the main power switch of the power supply unit, some parts in the units remain live. When opening the back door, be sure to turn OFF the main power switch and unplug the power cord from the receptacle.

Strictly refrain from disassembly and repair of parts which are not indicated in this manual, as well as settings and remodeling.

To clean the game machine, wipe it with a soft cloth dampened in a neutral detergent.

- Using thinner of other organic solvent or alcohol may decompose the material.
- Electrical shock or equipment failure could be caused by water entering the inside of the machine.

Moving and transportation

⚠ CAUTION

Components in the game are sensitive to vibrations and impact. Care should be used when moving and transporting the game machine.
Be sure not to let the machine tip over.

Before moving the machine, be sure to turn OFF the main power switch, unplug the power cord from the receptacle and remove the power cord form the machine.

Before moving take the machine, off the levelers and move it on the casters.

Avoid excessive force while moving the machine.

PRECAUTIONS IN HANDLING

- When setting up, inspecting, maintaining, moving or transporting this product, follow the procedures and instructions set forth in this manual and perform such work safely.
- Do not set up, handle, inspect, maintain, move or transport this product under conditions equivalent to the condition of "WARNING" or "CAUTION" specified in this manual.
- If a new owner is to have this product as a result of transfer, etc., be sure to give this manual to the new owner.

CONTENTS

1. SPECIFICATION AND DIMENSIONS
- 1-1. DIMENSIONS ····· 8
- 1-2. SPECIFICATIONS ····· 8

2. NAME OF PARTS
- 2-1. EXTERNAL PARTS ····· 9
- 2-2. INTERNAL PARTS ····· 9
  - 2-2-1. COIN DOOR AND MONITOR CONTROLER ····· 10
  - 2-2-2. SMPS AND TRANSFORMER ····· 10
  - 2-2-3. MAIN AND I/O PCB ····· 11
  - 2-2-4. MONITOR PCB ····· 11
  - 2-2-5. CRT ····· 11

3. HOW TO ASSEMBLE
- 3-1. CONNECTOR CONNECTION ····· 12
- 3-2. CABINET ASSEMBLY ····· 13

4. GAME SETUP AND TEST MODE ····· 14~15

5. DETAILS OF SETUP MODE
- 5-1. SETUP 1 ····· 16~17
- 5-2. SETUP 2 ····· 18~19
- 5-3. SETUP 3 (ONLY FOR THE TICKET MODE) ····· 20
- 5-4. LOAD DEFAULT ····· 21
- 5-5. SCREEN TEST ····· 22
- 5-6. SENSOR SETTING ····· 23
- 5-7. DATA BANK ····· 24
- 5-8. DATA BANK CLEAR ····· 25

6. A/S MODE
- 6-1. SENSOR PROBLEM ····· 26~27
- 6-2. MODE FOR CHECKING CAPSULE DISPENSER ASS'Y ····· 28~29
- 6-3. MODE FOR CHECKING THE TIKCET DISPENSER ····· 30~31

7. TROUBLE SHOOTING
- 7-1. CHECK POINTS IN CASE OF NO VIDEO AND NO SOUND ····· 33
- 7-2. CHECK POINTS IN CASE OF NO VIDEO ····· 33
- 7-3. CHECK POINTS IN CASE OF NO SOUND ····· 33
- 7-4. PROBLEMS OF CAPSULE SUPPLYER ····· 34

8. OPTION
- 8-1. TICKET DOOR OPTION ····· 35
- 8-2. COIN DOOR OPTION ····· 35

9. DIP S/W DESCRIPTION ····· 36

10. ASSEMBLY DRAWING AND PARTS LIST
- 10-1. ASSEMBLING CABINET LOW(1) ····· 37
- 10-2. ASSEMBLING CABINET LOW(2) ····· 38
- 10-3. ASSEMBLING CABINET LOW(3) ····· 39
- 10-4. ASSEMBLING CABINET LOW(4) ····· 40
- 10-5. ASSEMBLING CABINET UP(1) ····· 41
- 10-6. ASSEMBLING CABINET UP(2) ····· 42
- 10-7. ASSEMBLING CAPSULE DISPENSER ····· 43

11. GENERAL WIRING DIGRAM ····· 44~45

12. SCHEMATIC FOR MAIN BOARD ····· 46~59

13. SCHEMATIC FOR I/O BOARD ····· 60~62

14. SCHEMATIC FOR MONITOR BOARD ····· 63

1. Specification and Dimensions

1-1 DIMENSIONS

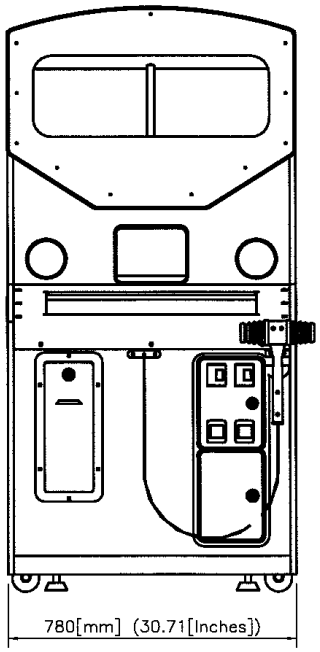

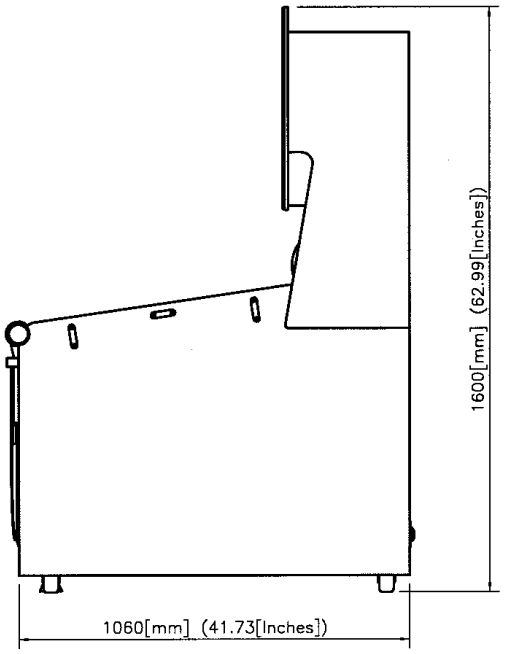

1-2 SPECIFICATION

POWER CONSUMPTION	163 (Watts)
DISPLAY	29 (Inches)
WEIGHT	150 (Kgs)
APPROPRIATE POWER SOURCE	AC 120 / 220 (V), 50~60(Hz)

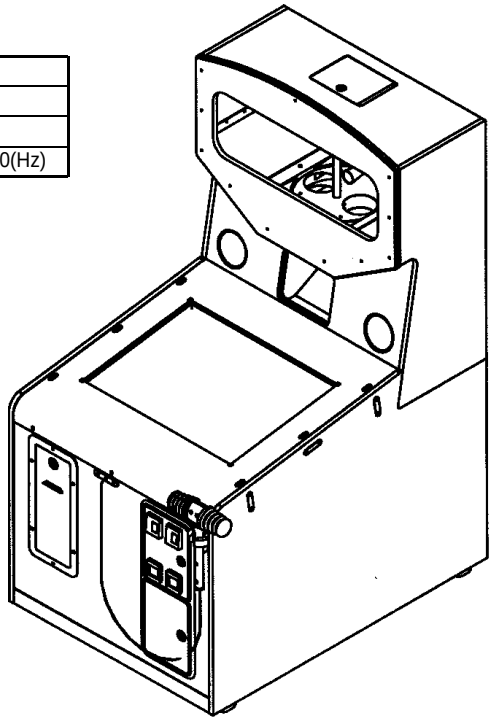

2. Name of Parts

2-1 EXTERNAL PARTS

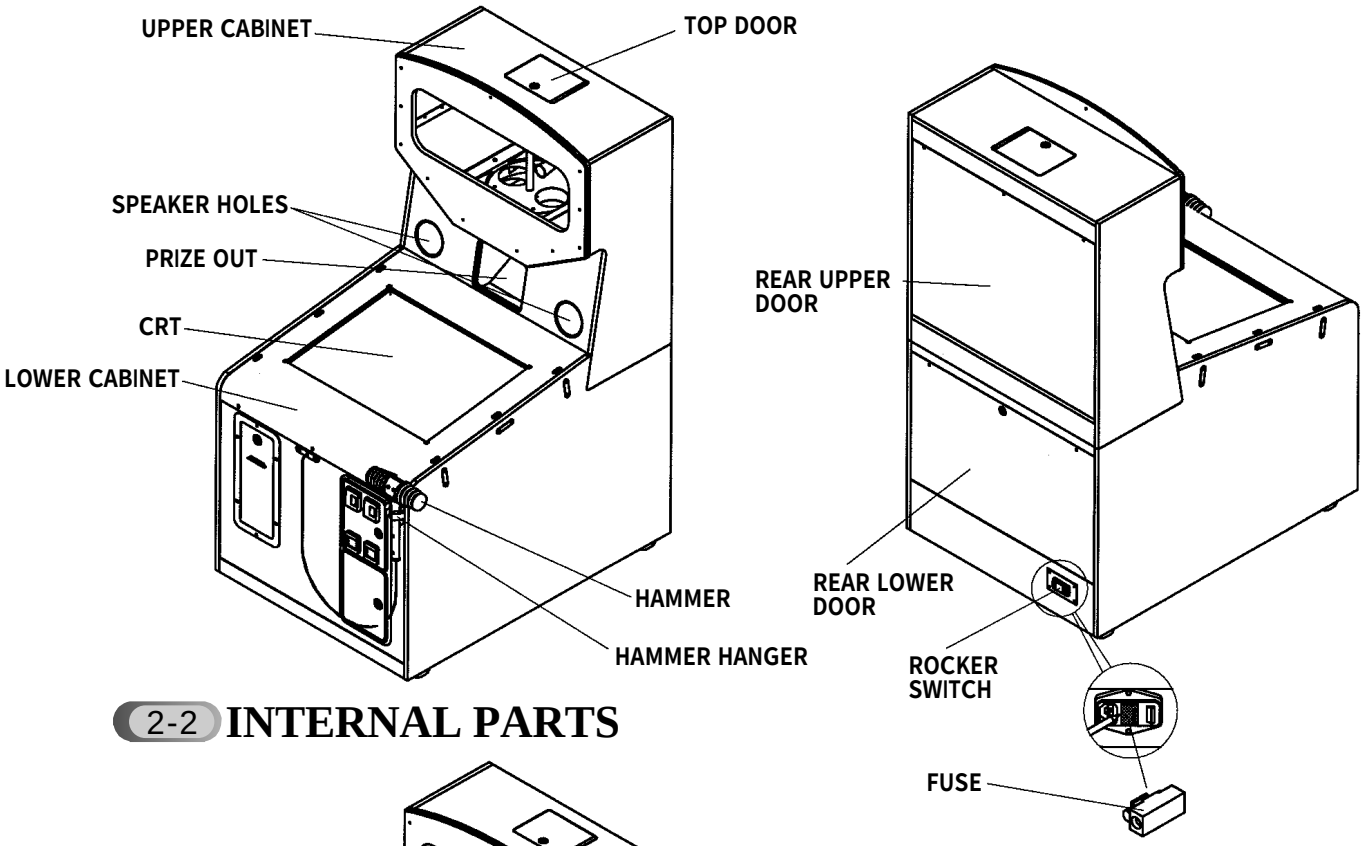

2-2 INTERNAL PARTS

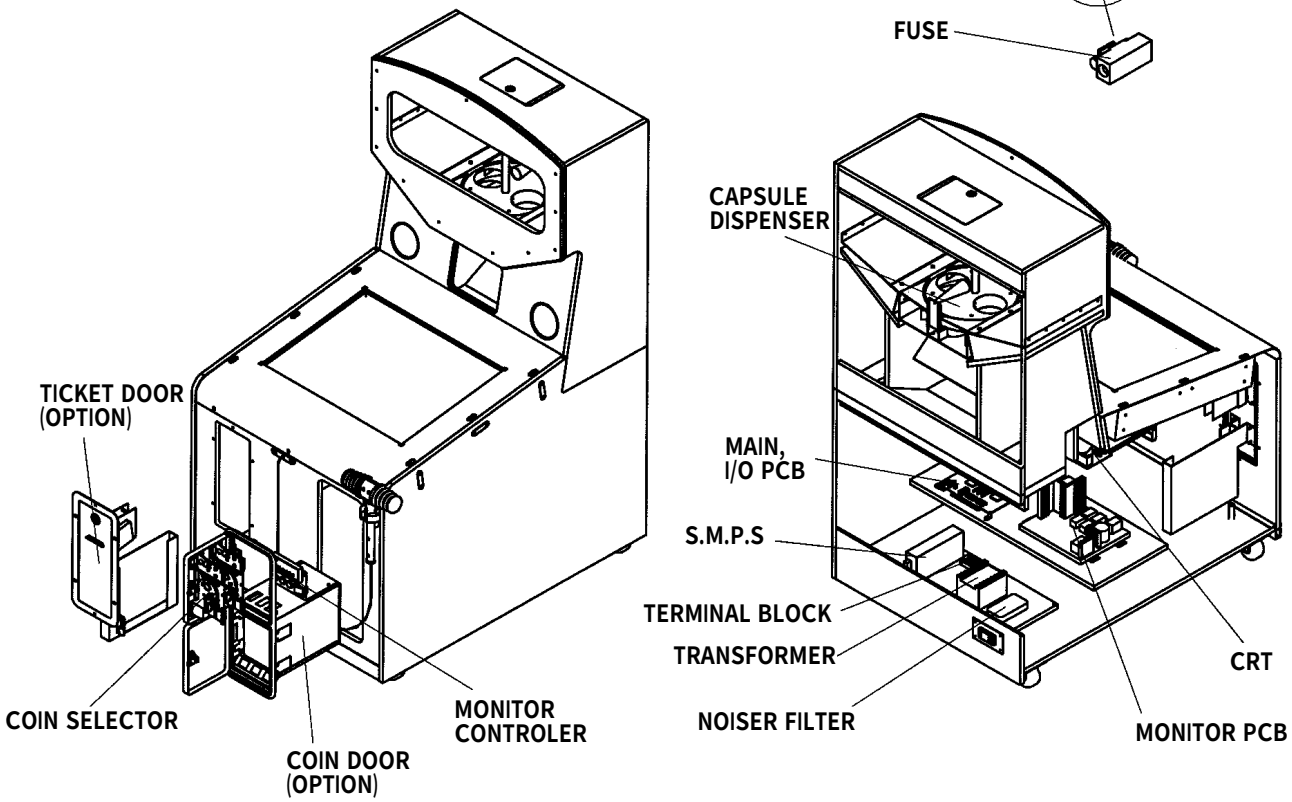

2-2-1. COIN DOOR AND MONITOR CONTROLER

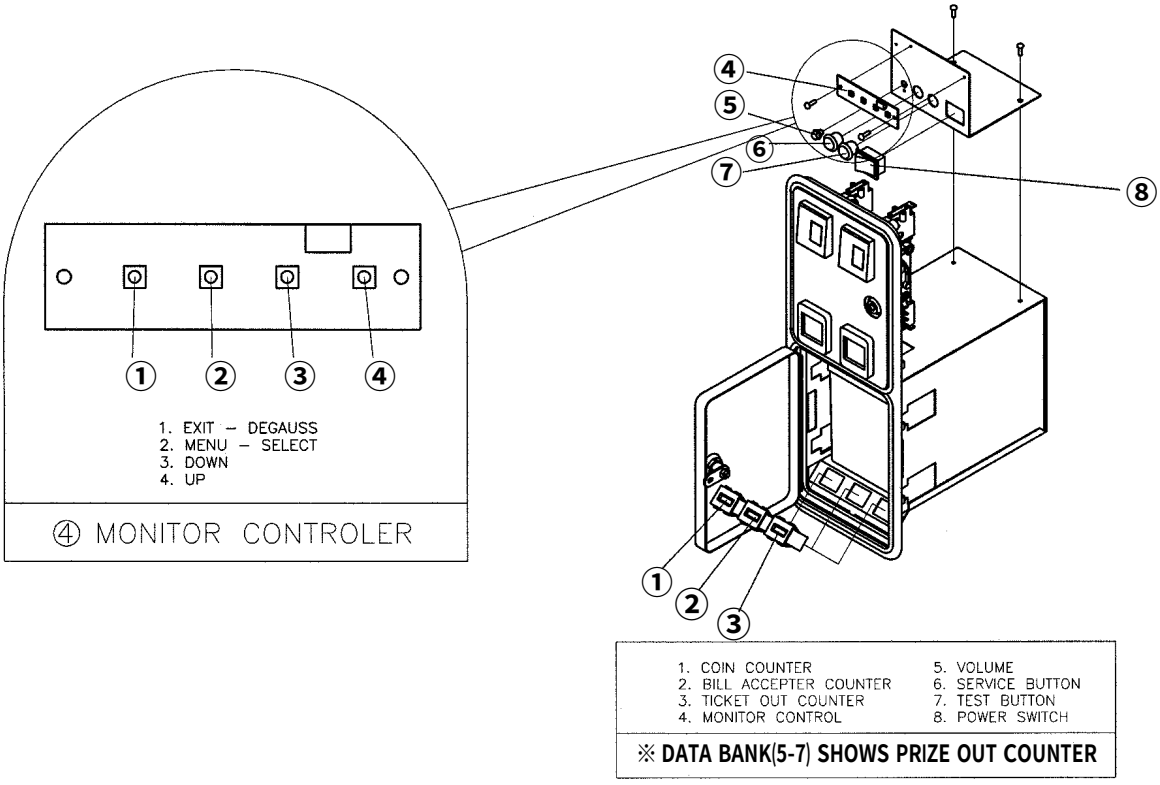

2-2-2. S.M.P.S AND TRANSFORMER

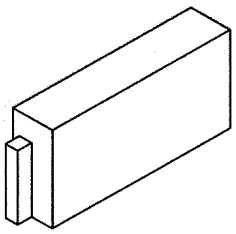

S.M.P.S
SPEC [SF-3121]
– DC 5V / 8A
– DC –5V / 1A
– DC 12V / 6A

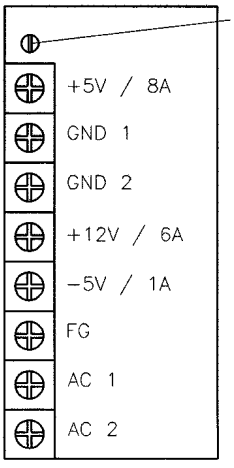

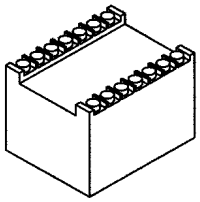

TRANSFORMER
SPEC
– IN [90V~130V,200V~240V]
– OUT [220V / 300W]

CONNECT THE WIRE ACCORDING TO INPUT VOLTAGE.

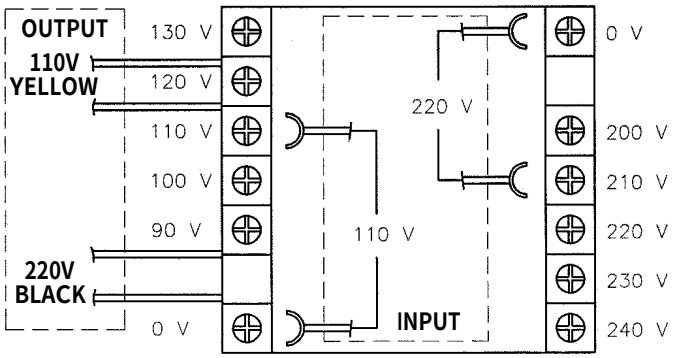

Name of Parts

2-2-3. MAIN AND I/O PCB

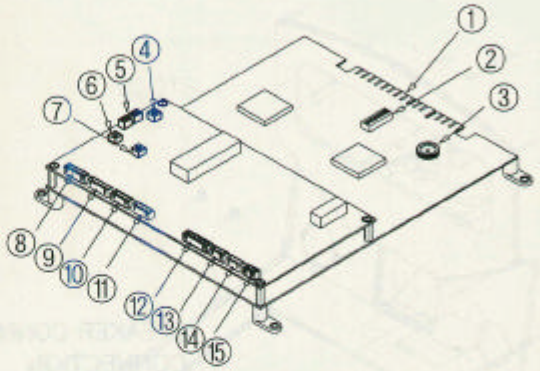

NO	NAME	NO	NAME
①	JAMMA	⑨	X-RECEIVER
②	DIP SWITCH	⑩	Y-SEND
③	SOUND VOLUME	⑪	X-SEND
④	IMPACT SENSOR VOLUME	⑫	TICKET DISPENSER
⑤	IMPACT SENSOR VOLUME	⑬	PRIZE 1
⑥	Y AXIS SENSOR VOLUME	⑭	PRIZE1
⑦	X AXIS SENSOR VOLUME	⑮	POWER
⑧	Y-RECEIVER	⑯	

2-2-4. MONITOR PCB

NO	NAME
①	AC POWER
②	D-COIL
③	DY (UP & DOWN)
④	CRT SIGNAL
⑤	CONTROL UNIT
⑥	SYNC INPUT SIGNAL
⑦	DY (LEFT & RIGTH)
⑧	POWER INPUT
⑨	SYNC OUTPUT SIGNAL
⑩	VIDEO SIGNAL INPUT
⑪	RGB SIGNAL OUTPUT

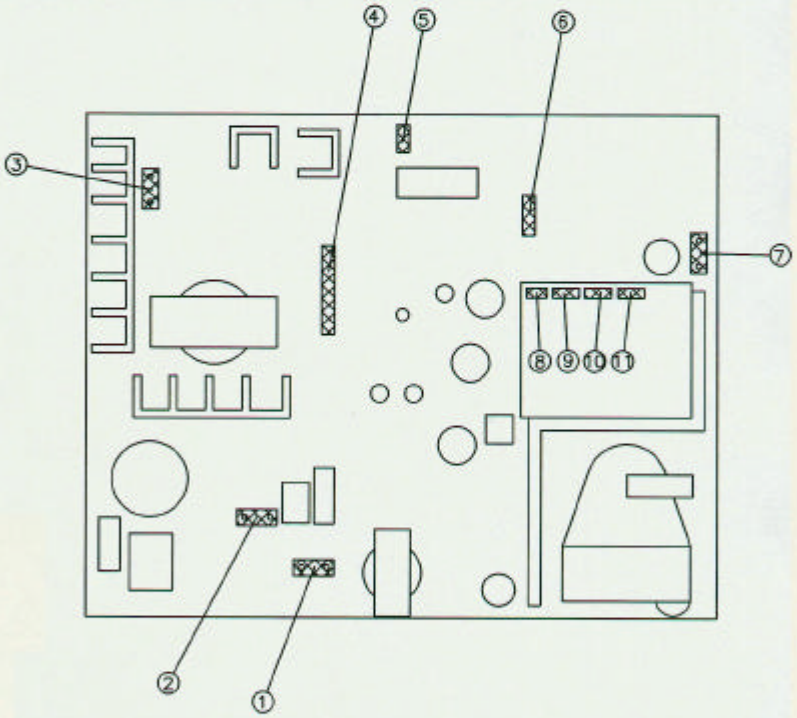

2-2-5. CRT

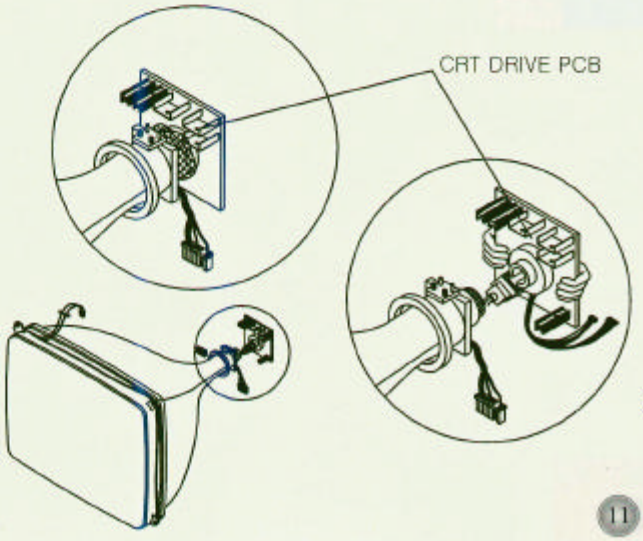

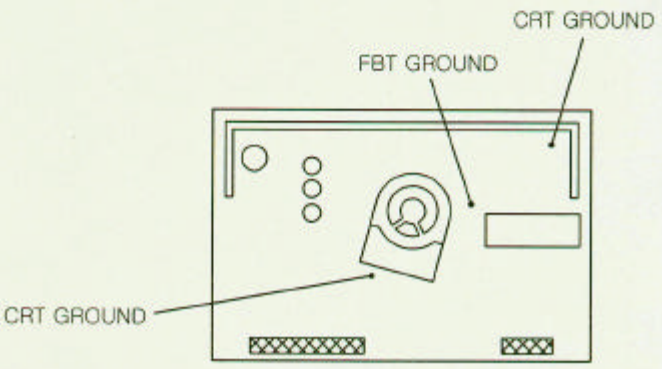

3. How to Assemble

3-1 CONNECTOR CONNECTION

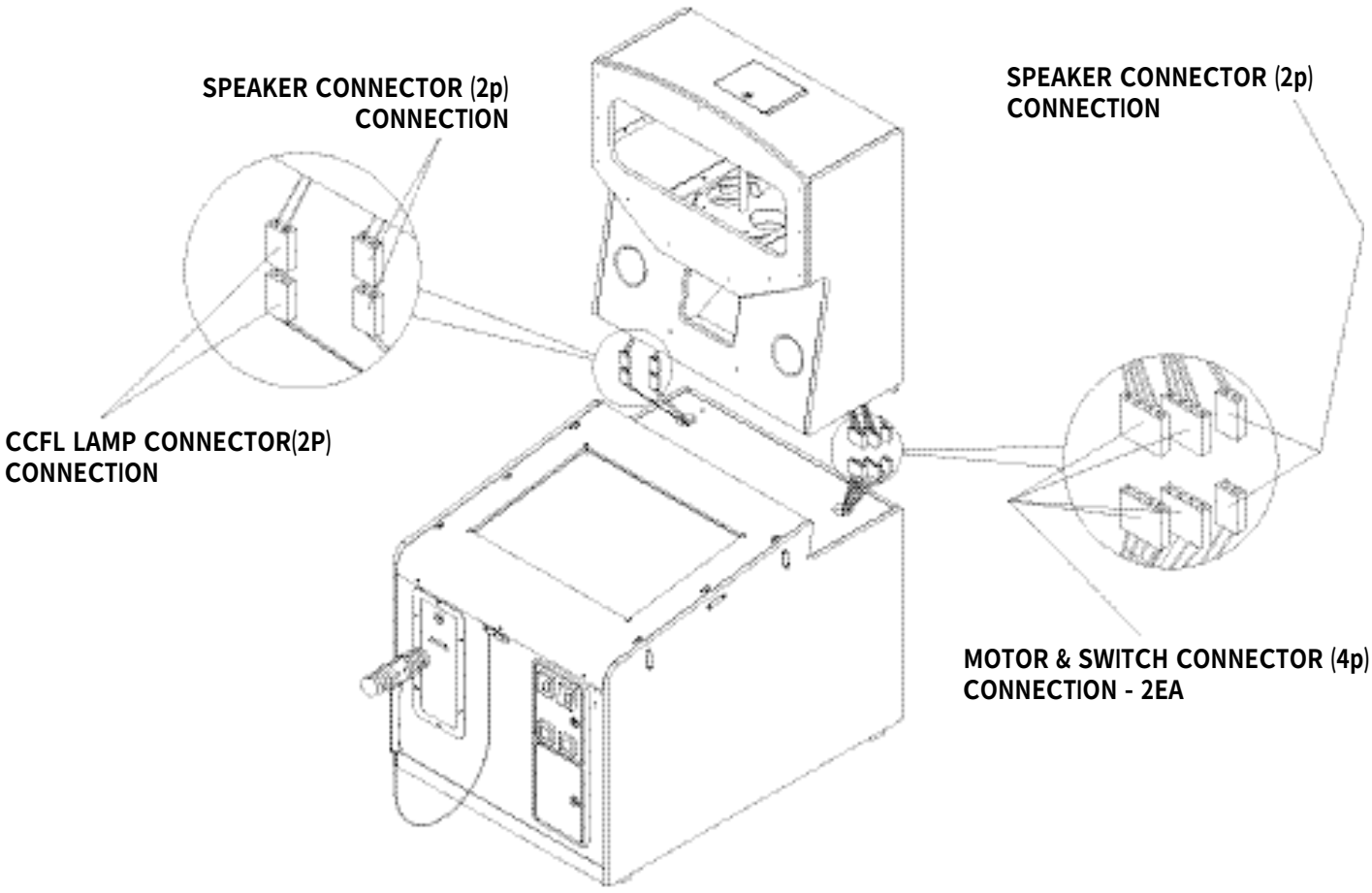

3-2 CABINET ASSEMBLY

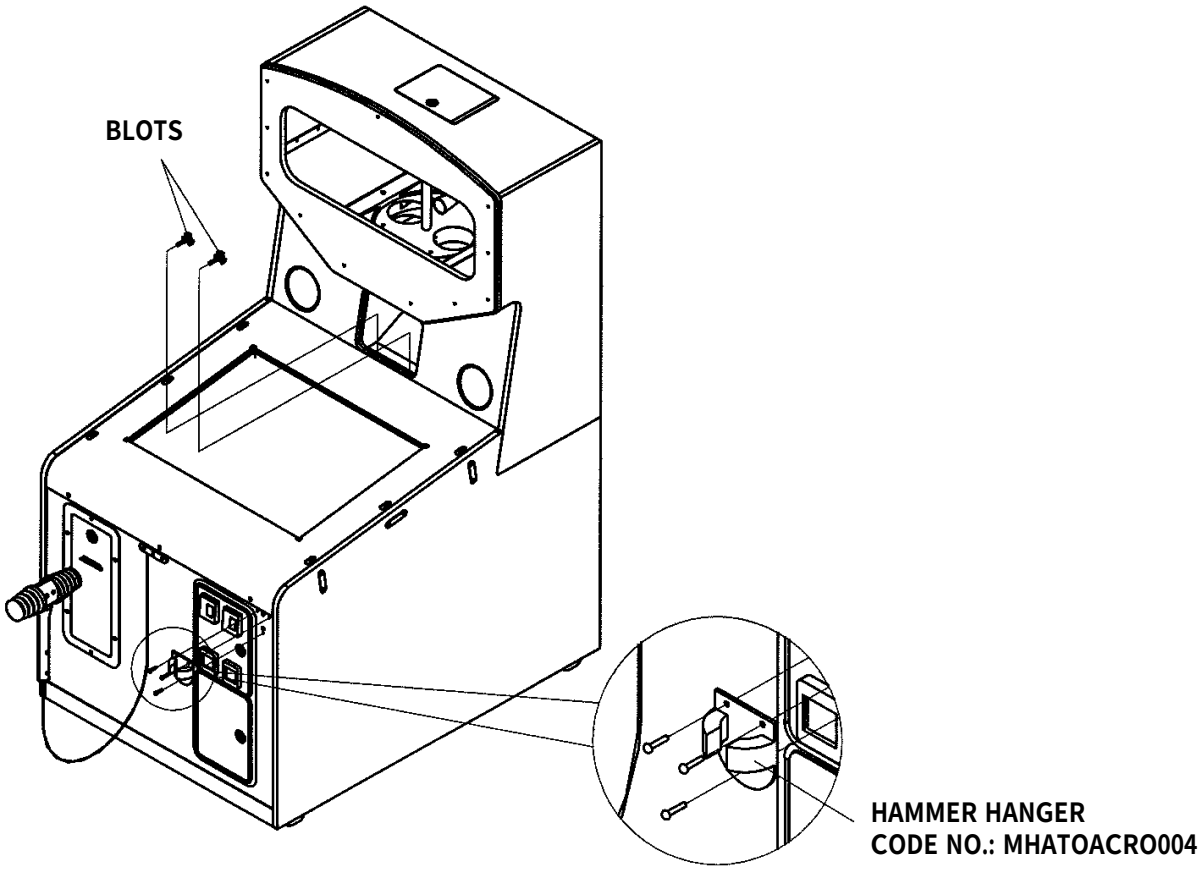

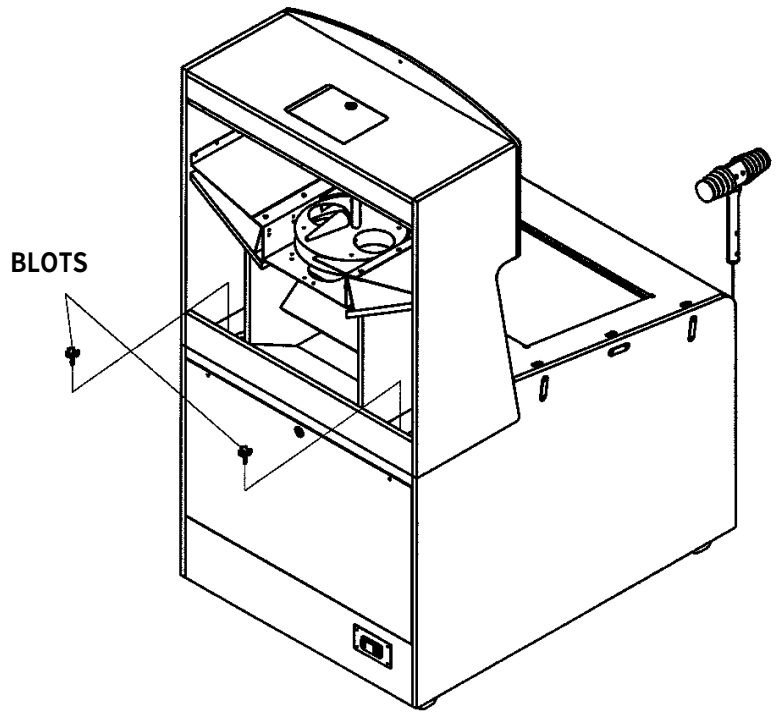

4. Game setup and test mode

1 When you push the TEST S/W, “SETUP 1” is dispalyed as below. You can setup the game as you want.

PRIZE MODE

TICKET MODE

2 When you push TEST S/W once again, the SETUP 1 disappears and SETUP 2 is displayed.

PRIZE MODE

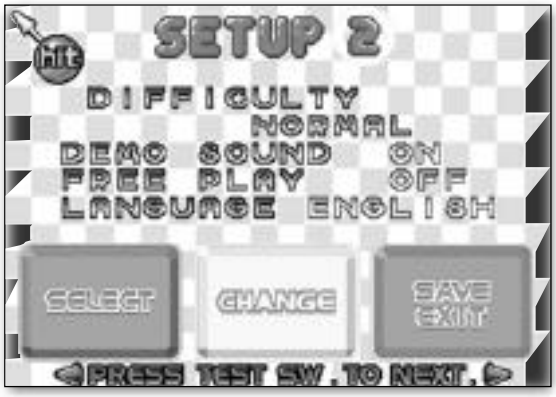

TICKET MODE

3 Various setup displays appear each time you push the TEST S/W, as shown in the figure below.

PRIZE MODE

SETUP 1

SETUP 2

TICKET MODE

SETUP 1

SETUP 2

SETUP 3

SCREEN TEST

LOAD DEFAULT

SENSOR SETTING

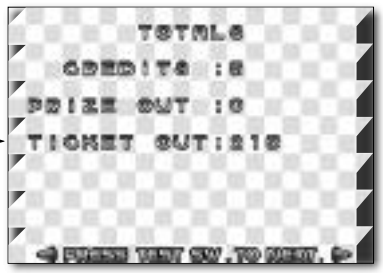

DATA BANK

DATA BANK

5. Detailed of setup mode

Each designated function in the setup mode can be set by hitting the figure on the screen with your hammer.

5-1 SETUP 1

- The SETUP 1 display allows you to change coin settings.
- You can change the setting values by hitting the “SELECT” button with your hammer as much as you want.
- The location of setup values are changed when you the “CHANGE” button with your hammer.
- Hit the “SAVE EXIT” to save the values you set.

PRIZE MODE

钝 SHOOTER1 - COIN(S) / CREDIT(S)
- This is related to the number of coins players insert. You can set how many coins are needed for a credit (game).
- You can change each of the coin or credit values to equal anywhere from 1~9.

钝 SHOOTER 2 - BILL(S) / CREDIT(S)
- This is used when you have a bill-validator installed.
- The details are the same as for those of SHOOTER 1.

钝 CREDIT[S] / START
- Set how many credits are required to play the game.
- The setting range is from 1 to 9.

钝 CREDIT[S]/CONTUNUE
- Set how many credits are required to continuously play the game.
- The setting range is from 1 to 9.

钝 FREE PLAY
- Set up the possibility of free play.
- Setting may be changed to ON/OFF

TICKET MODE

钝 SHOOTER 1 - COIN[S]/CREDIT[S]

- This is related to the number of coins players insert. You can set how many coins are needed for a credit (game).
- You can change each of the coin or credit values to equal anywhere from 1~9.

钝 SHOOTER 2 -BILL[S]/CREDIT[S]

- This is used when you have a bill-validator installed.
- The details are the same as for those of SHOOTER 1.

钝 PRIZE

- Set whether prize will be provided or not.
- Setting can be changed to ON / OFF.

钝 CREDITS/PRIZE

- Players can win the prize according to how many credits are accumulated.
- This is activated when “PRIZE ON” is set.
  (Prize never come out if “PRIZE OFF” is set)
- Setting may be changed to 20 / 50 / 100 / 150 / 200

5-2 SETUP 2

- The degree of difficulty and language of game are set on the SETUP 2 screen.
- You can change the setting values by hitting the “SELECT” button with your hammer as much as you want.
- The location of setup values are changed when you the “CHANGE” button with your hammer.
- Hit the “SAVE EXIT” to save the values you set.

钝 CREDITS/PRIZE
- Players can win the prize according to how many credits are accumulated. The higher credits are, the lower the winning percentage is.
- The setting range is from 1 to 400.

钝 ROUND TO PRIZE
- Set the number of the play round for getting to the prize out chance.
- The setting range is from 1 to 6.

钝 DIFFICULTY
- Set up the degree of difficulty.
- Setting may be changed to EASY / NORMAL / HARD / VERY HARD

钝 LIFE
- Set the number of LIFE a play.
- The setting range is from 1 to 9.

钝 DEMO SOUND
- Set up demo sound ouput.
- Setting may be changed to ON / OFF.

钝 BONUS TICKET(S)
- Set the number of ticket(s) regardless of scores.
- The setting range is from 1 to 9.

钝 LANGUAGE
- Set up the language to be used in the menu display, etc.
- Setting may be changed to ENGLISH / KOREAN.

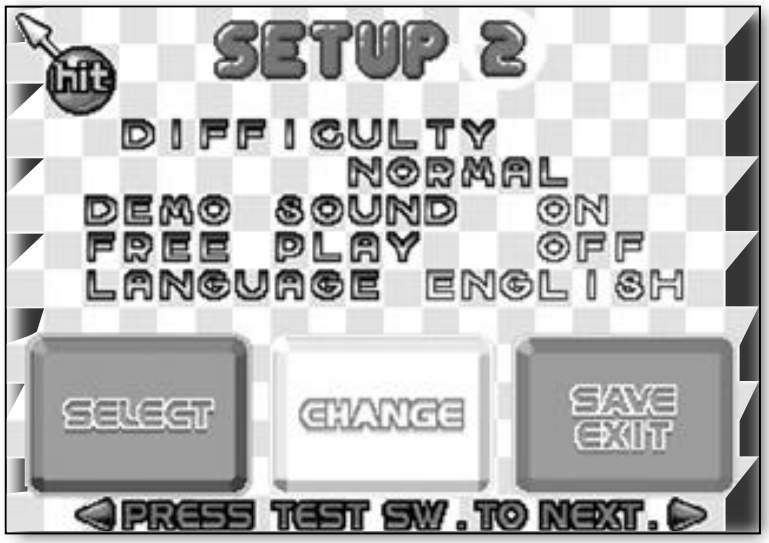

TICKET MODE

钝 DIFFICULTY
- Sets up the game's difficulty.
- Setting may be changed to EASY / NORMAL / HARD / VERY HARD.

钝 DEMO SOUND
- Set up demo sound output.
- Setting may be changed to ON / OFF

钝 FREE PLAY
- Set up the possibility of free play
- Setting may be changed to ON / OFF

钝 LANGUAGE
- Set up the language to be used in the menu display, etc.
- Setting may be changed to ENGLISH / KOREAN.

5-3 SETUP 3 (Only for the TICKET MODE)

- Setting may be changed for the ticket on the SETUP 3 screen.
- You can change the setting values by hitting the “SELECT” button with your hammer as much as you want.
- The location of setup values are changed when you the “CHANGE” button with your hammer.
- Hit the “SAVE EXIT” to save the values you set.

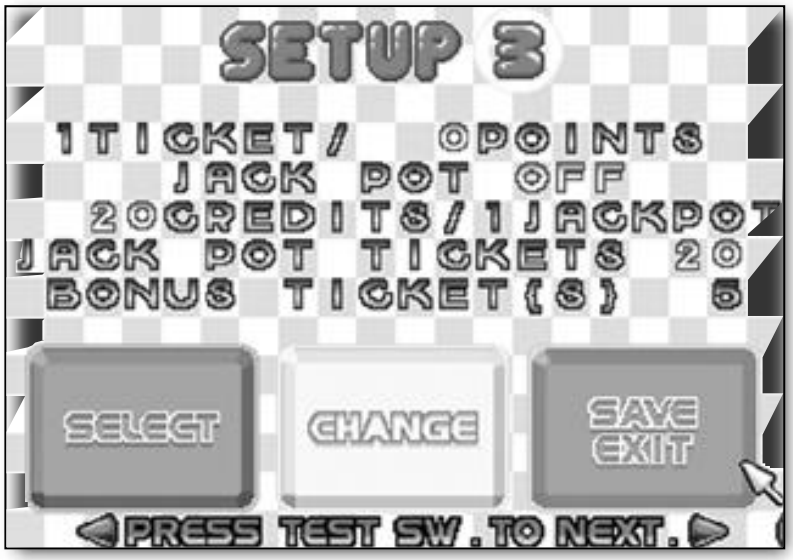

钝 TICKET/POINTS
- Players can win ticket/s according to how many scores players obtain.
- Scores that you can obtain in the play of a game is approximately 1000 points.
  (Example : 3 tickets will come out as 1000 ÷ 300 = 3.33333... If setting 300 points.)
- The scope of setting change ranges from 10 through 600.

钝JACK POT
- Set whether JACK POT exists or not.
- Setting may be changed to ON/OFF.

钝CREDITS/JACK POT
- Set how many of credits are needed to win a JACK POT.
- The scope of setting change ranges from 5 through 200.

钝JACK POT TICKETS
- Set how many ticket will come out in JACK POT.
- The scope of setting ranges is from 5 through 200.

钝BONUS TICKET(S
- Set the number of ticket(s) regardless of scores.
- The setting range is from 1 to 9.

5-4 LOAD DEFAULT

- All the manufacturer's default setup values can be saved.
- When you hit the YES button with your hammer, the manufacturer's default values are saved and you are returned to the game display.
- When you hit the NO button with your hammer, the existing setup values are kept and you are returnded to the game display.

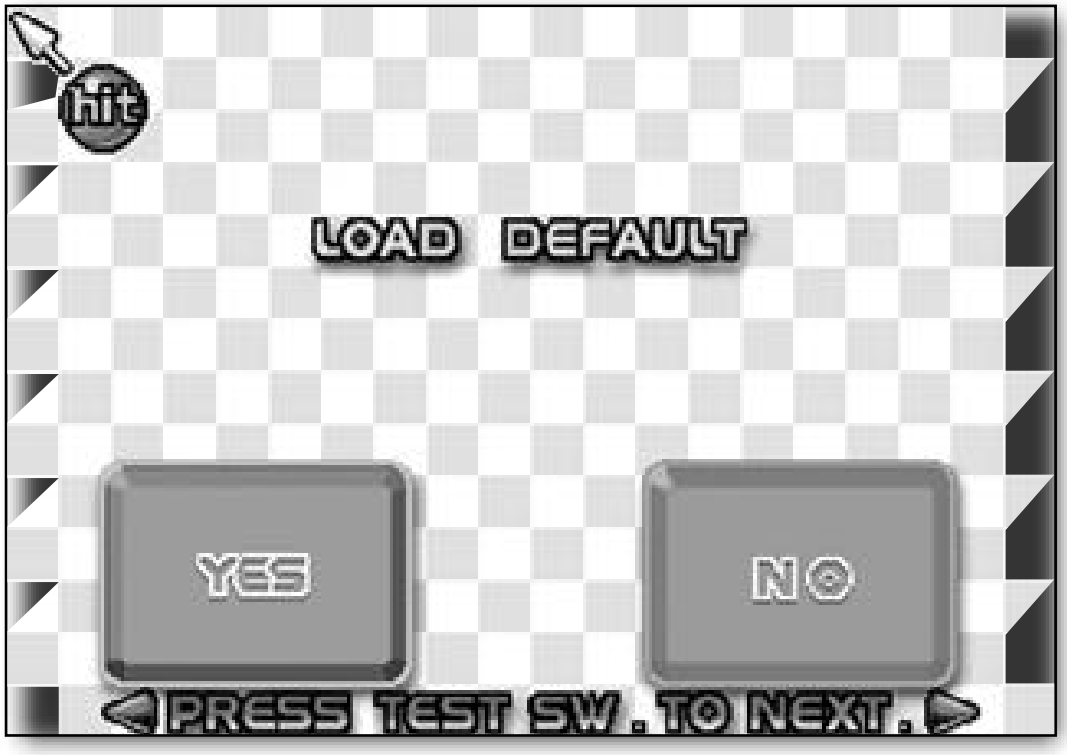

5-5 SCREEN TEST

- This display allows you to test CRT status such as display color, etc.

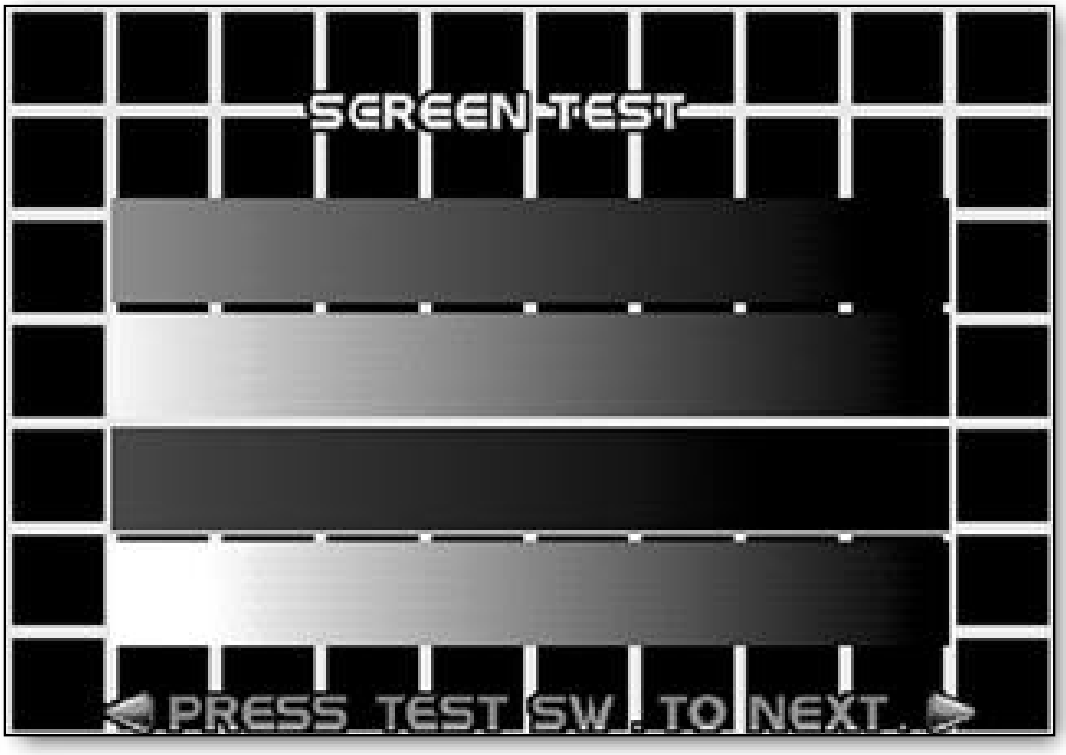

5-6 SENSOR SETTING

- Sets up the exact hit-spot where you hit.
- Adjust the exact hit-spot in this display if the actual spot hit and the display spot are different.

Setup instructions

1. Collate the hammer to the top-left section of the display, according to the help guides displayed, and then hit the external steel plate with your fist.
2. A help guide will appear after the arrow moves to the bottom-right of the display.
3. Collate the hammer to the bottom-right section of the display, according to the help guides displayed, and then hit the external steel plate with your fist.
4. Once the setup is complete, an arrow will appear on the display to follow the hammer's movement.
5. If the arrow does not follow the hammer's movement, the setup was performed improperly. In this case, try to set up again following the above instructions carefully.
6. If the setup was performed properly, then hit any spot with your hammer.
7. You can move on to the SETUP 1 display.
8. When you hit SAVE EXIT in the SETUP 1 display, all your setup values will be saved and you will be returned to the game display.

5-7 DATA BANK

• This is mode to ensure information for credit, prize and ticket after the game machine is used.

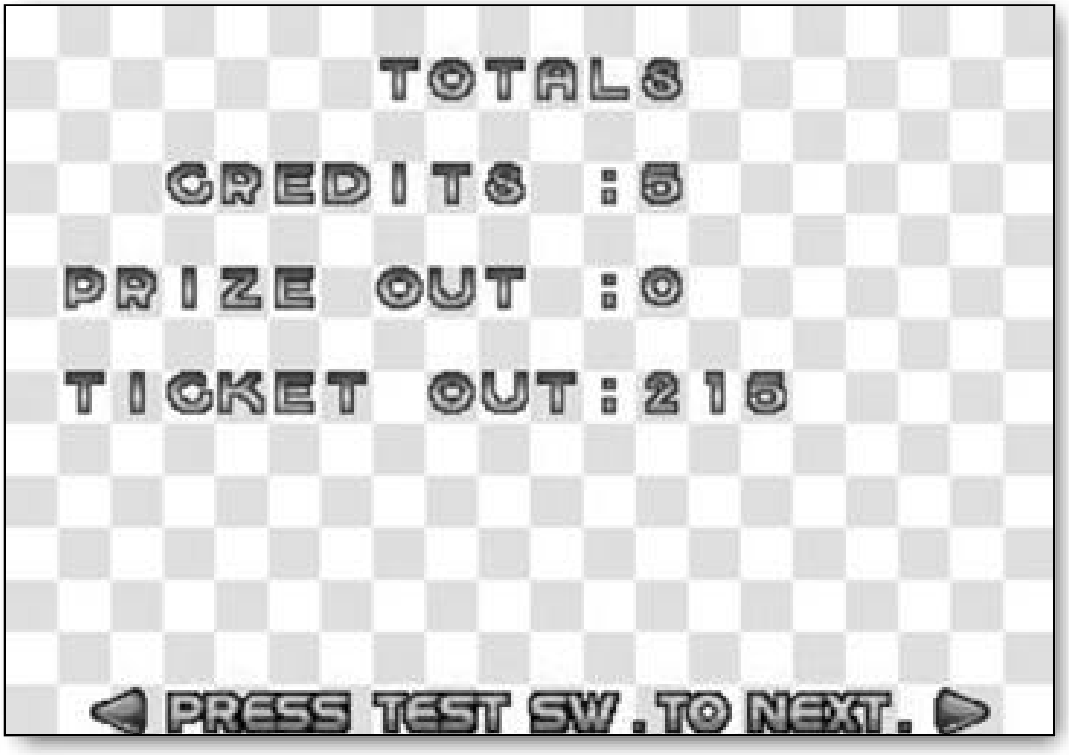

钝 CREDITS

• CREDITS show how many credits come after the game machine is used.

钝 PRIZE OUT

• PRIZE OUT shows how many prizes are provieded after the game machine is used.

钝 TICKET OUT

• TICKET OUT shows how many ticket are provided after the game machine is used.

钝 All values are 0 in the shipment from factory.

5-8 DATA BANK CLEAR

• DATA BANK CLEAR is a mode for deleting the saved values of DATA BANK.

钝 YES

- The following screen appears if slaming the YES button with your hammer.
- All contents of the DATA BANK is initialized to 0 if hitting the YES button on the above screen.

钝 NO

- Hitting the NO button with a hammer on the above screen allows to move on to the “SETUP 1” screen without deleting contents of DATA BANK.

6. A/S MODE

钍 You can enter A/S Mode by turning on the power switch with the Test Button pushed.
Before getting to this A/S mode, there shoud be nothing on the screen

6-1 Sensor problem

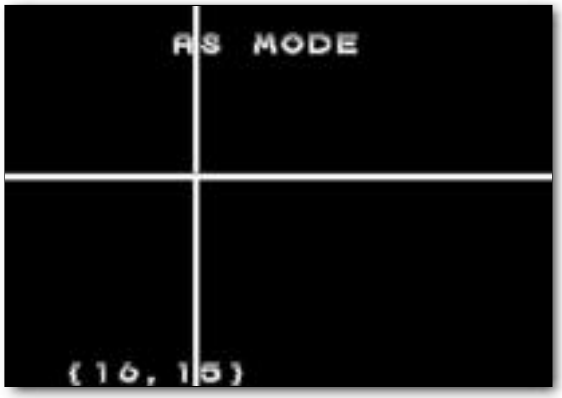

figure 1-1

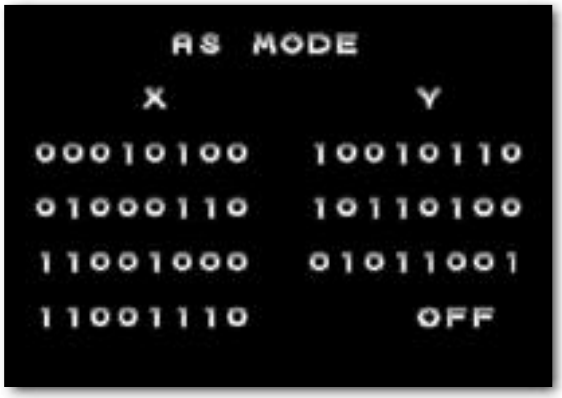

figure 1-2

1) When you get to the A/S mode at first, (FF,FF) and no white line should appear.

- Condition: there shoud be nothing on the screen

2) When randon numner and white line are shown like figure 1-1 on the conditioned that there is nothing on the screen, you have to move to the next AS mode (figure 1-2) by pushing the test button because the sensors are defective.

- Check point : all the numbers of figure 1-2 should be “O” when all the X,Y sensors are normal.
  If there are “1” on the screen,
  - Step #1: try to change “1” to “O” by adjusting the direction of X,Y sensors.
  - Step #2: If you can not chagne“1" to “0”, change the related sensor.

3) Shock sensor test

- To check the shock sensor, hit the screen of the figure 1-2. If “OFF” does not return to “OFF” after shortly showing “ON”, the shock is deffective.

4) Although all the numbers are "0" and the shock sensor is in a good condition, when the sensor does not in the play you have to change the I/O PCB

5) Reference :

- The figures(“0” and “1”) below “X” show whether the sensors set at top and bottom of the monitor show the number as below:
  - ▶ Figure “0” : Nothing is sensed.
  - ▶ Figure “1” : Something is sensed or the sensor direction is wrong
- The figures(“0” and “1”) below “Y” show whether the sensors set at left and right of the monitor show the numbers as below:
  - ▶ Figure “0” : Nothing is sensed.
  - ▶ Figure “1” : Something is sensed or the sensor direction is wrong
- Figure “0” should be appeared in normal condition.

6-2 Mode for checking Capsule Dispenser Ass'y.

• You can move on to the next Mode by pushing the Test Button as shown below.
(Note : in advance check whether DIP swith is on the prize mode before the following steps)

figure 2-1

1) Normal condition

• When you hit the screen, the Capsule Dispenser in the Bill Board starts working. Then it stops working by tuching the Micro Switch to the Capsule Dispenser.

2) When the Capsule Dispenser ass'y does not work,

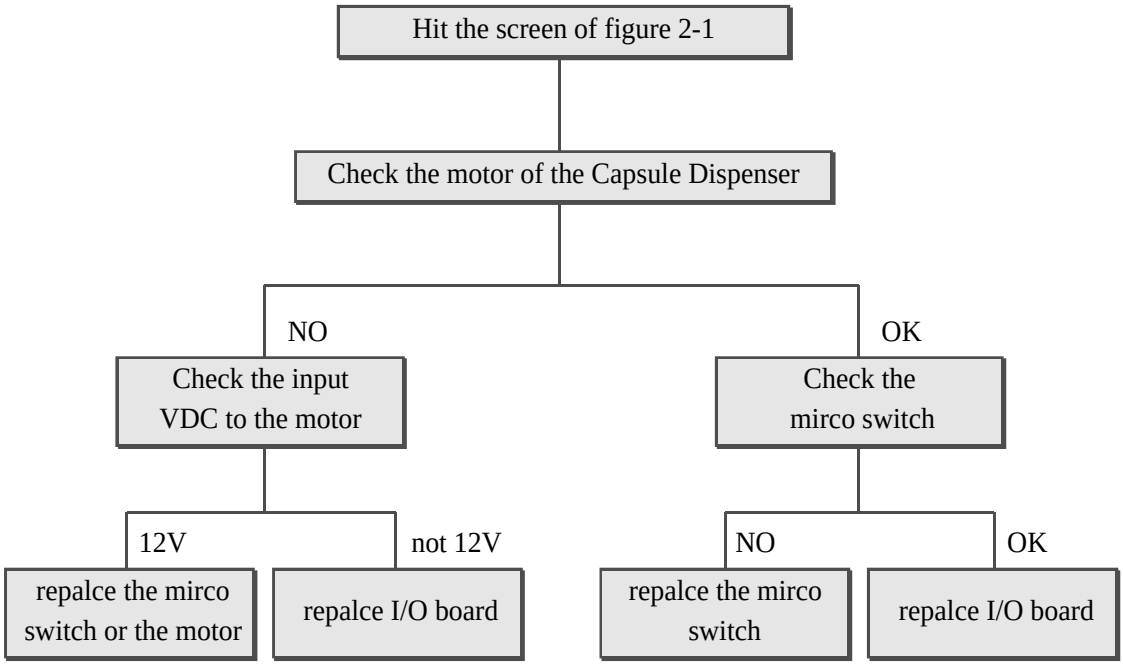

6-3 Mode for checking the Ticket Dispenser

You can move on to the next Mode by pushing the Test Button as shown below.

figure 3-1

1) Normal condition

- When you hit the screen of the figure3-1, the Ticket dispenser starts to work until the ticket comes out.

2) When the ticket does not work in the game play,

(Note : in advance check whether DIP swith is on the ticket mode before the following steps)

Step#1 : push the button of the ticket dispensor and find if the ticket does not come out, replace the dispensor. Otherwise take the step#2

Step#2 : check the connectors between the ticket dispenser and I/O board If all the connectors are well connected, move to the step#3.

Step#3 :

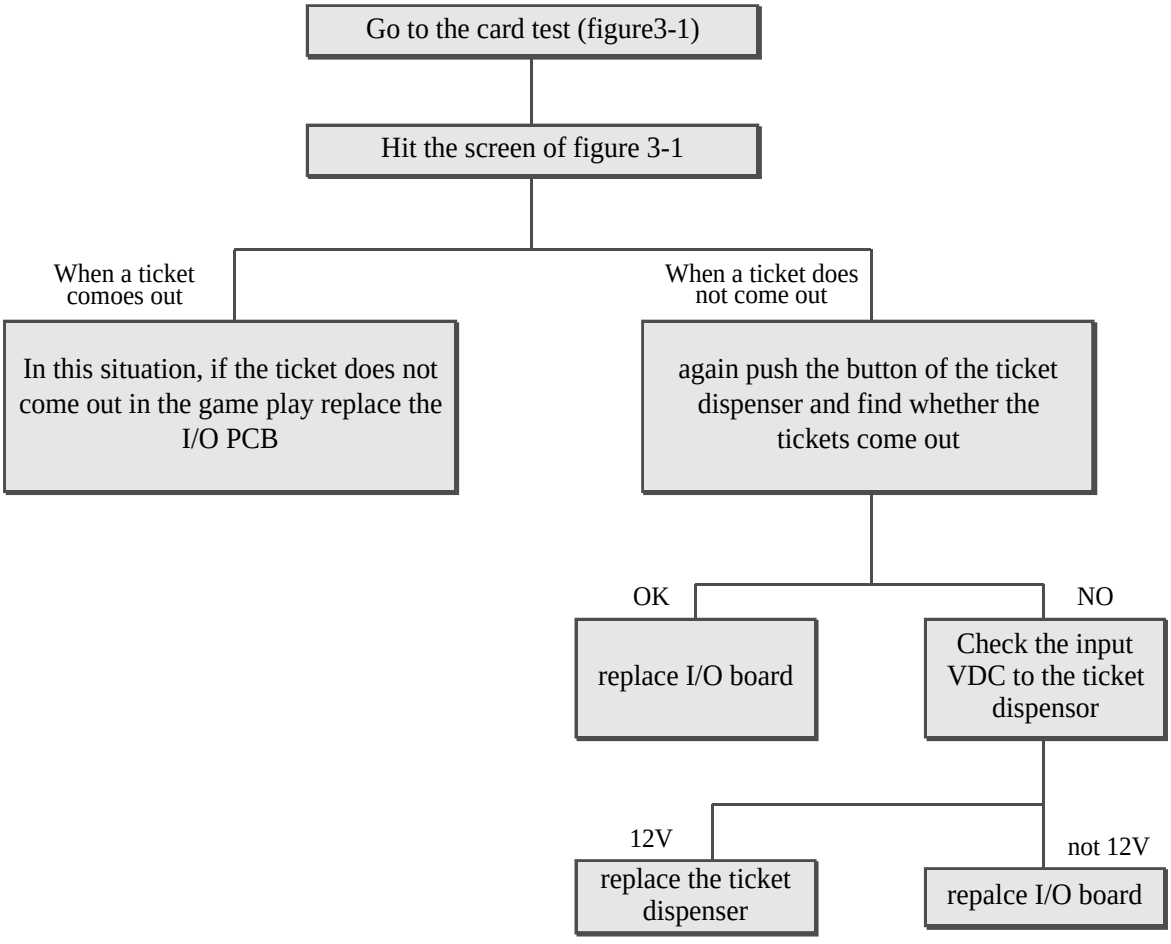

※ Except for the error of sound and graphic, I/O borad should be generally checked at first when no ticket-out and no prize-out happen.

7. TROUBLE SHOOTING

Problem	priority	STEP 1	STEP 1
No sound & no picture	1	Check the voltage status of input VAC	If it is no voltage, check the fuse and the disconnection of AC cord
	2	Check AC lamp in the billboard cabinet	If it is O.K., the input VAC and the power until the transformer is in a good condition.
	3	Mesure the input VAC of the transformer	If the input VAC is 110V or below 120V, change the 120V line of the input VAC to 110V line
	4	Check whether the LED of the SMPS is flickering at blue color and measure the input VAC of power SMPS	If the output VDC of the power SMPS are over or below 12V and 5V, adjust them with the voltage controller of SMPS.
	5	Check the input VDC of the main PCB and check out the input VDC after separating JAMMA connector from the main PCB	a) If the input VDC does not keep the regular voltages (12V and 5V) and b) if the input VDC keeps the regular value after disconnecting JAMMA, replace the main PCB.
No picture	1	Measure the input VAC voltage of the transformer	If the input VAC is 110V or below 120V, change the 120V line of the input VAC to 110V line
	2	Check the sound of the high voltage part of the monitor board when the machine is ON.	In case of no sound, the monitor board is defective. Try turn on the machine 20 minites after power off because the protector circuit is under working. If still no sound, replace the monitor board
	3	Slightly turn right the screen volume in the high voltage part of the monitor board and see if there is white lines on the screen.	If there is white lines, the main PCB is deffective. If not, the monitor board is deffective.
	4	Check whether the LED of the SMPS is flickering at blue color and measure the input VAC of power SMPS	If the output VDC of the power SMPS are over or below 12V and 5V respectively, adjust them with the voltage controller of SMPS.
	5	In case of the picture noise, repalce the main PCB.	After replacing the main PCB, there is still the picture noise, check again the output VDC.
No sound	1	Mesure the input VAC of the transformer	If the input VAC is 110V or below 120V, change the 120V line of the input VAC to 110V line
	2	Check whether the LED of the SMPS is flickering at blue color and measure the input VAC of power SMPS	If the output VDC of the power SMPS are over or below 12V and 5V respectively, adjust them with the voltage controller of SMPS.
	3	Check the sound wire, and maximize the volume of the main PCB and check the sound in adjusting the volume by the front volume controller	If the noise happens in adjusting the volume by the front volume controller, replace the main PCB.
	4	check the input VDC of the main PCB and check out the input VDC after separating JAMMA connector from the main PCB	a) If the input VDC does not keep the regular voltages (12V and 5V) AND b) if the input VDC keeps the regular value after disconnecting JAMMA, replace the main PCB.
COIN MECH PROBLEM	1	In case of the mechanic COIN mech, check the MICRO SWITCH. In case of the electronic coin mech check the VDC(YELLOW LINE=VDC 12V, BLACK LINE=GND, WHITE=SIGNAL).	
	2	As a next step, check all the connectors.	
	3	check the input VDC of the main PCB and check out the input VDC after separating JAMMA connector from the main PCB	a) If the input VDC does not keep the regular voltages(12V and 5V) AND b) if the input VDC keeps the regular value after disconnecting JAMMA, replace the main PCB.

note

1) VDC : DC Voltage on SMPS
2) VAC: AC Voltage
3) Voltage setting status at the factory
The input VAC to the transformer is 120V which is USA regular voltage. the outpout VAC from the transformer is 220V

If the AC voltage in the location is around 110V, the output VAC from the transformer is below 220V. To make 220V, change the 120V line of the input VAC to the 110V line. If the AC voltage in the location is around 90V, change the 120V line of the input VAC to the 90V line

7-1 CHECK POINTS IN CASE OF NO VIDEO AND NO SOUND

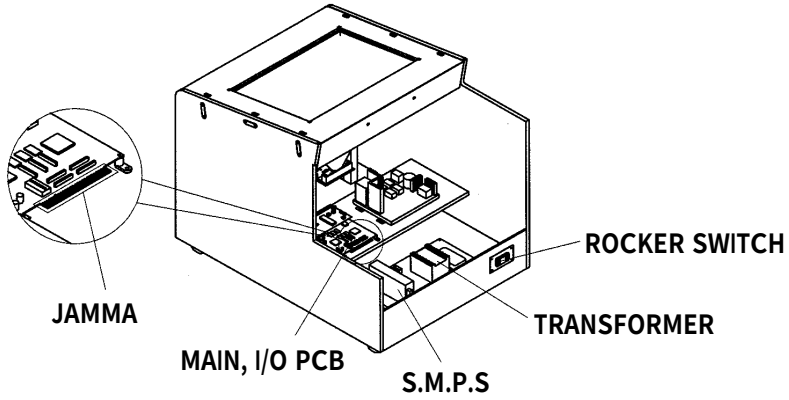

7-2 CHECK POINTS IN CASE OF NO VIDEO

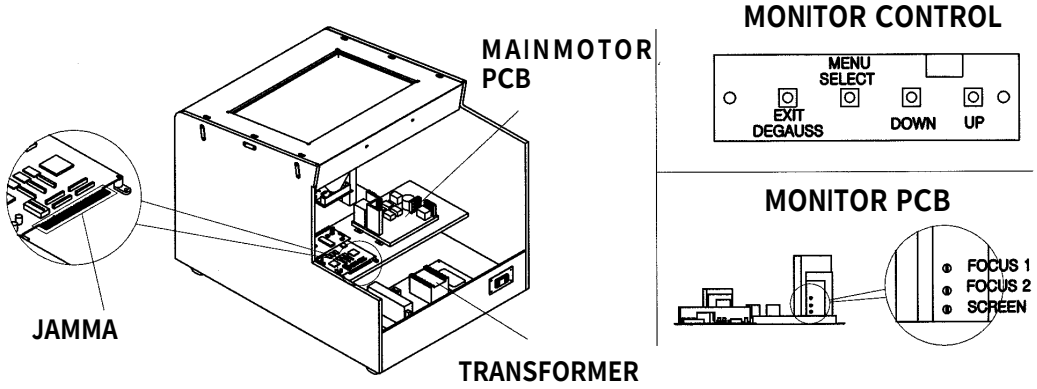

7-3 CHECK POINTS IN CASE OF NO SOUND

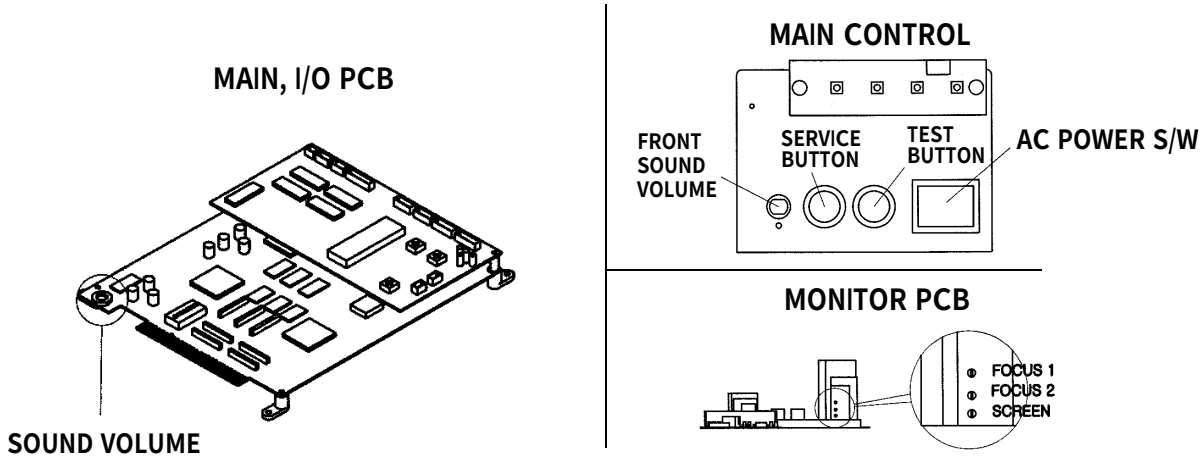

7-4 PROBLEMS OF CAPSULE SUPPLYER

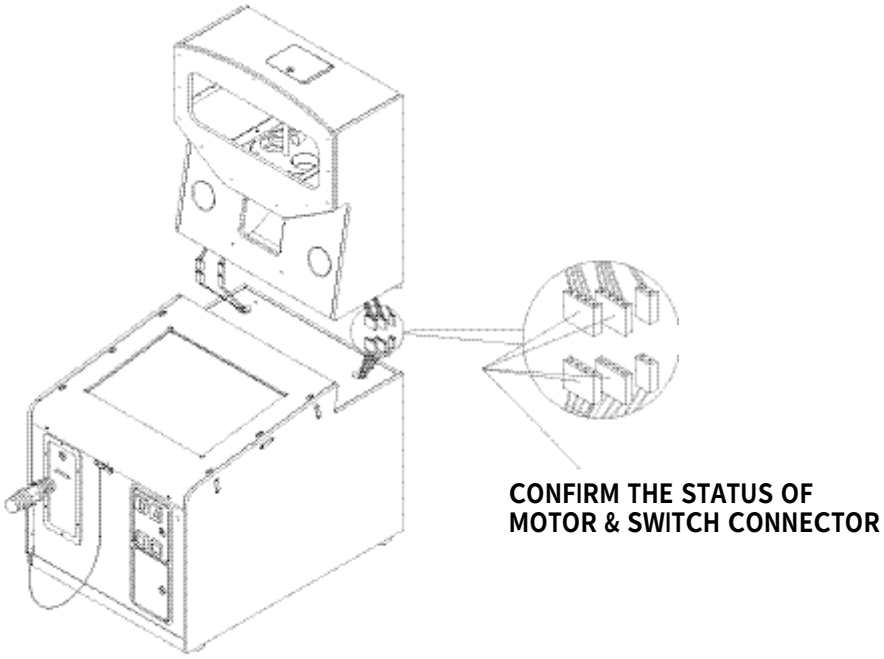

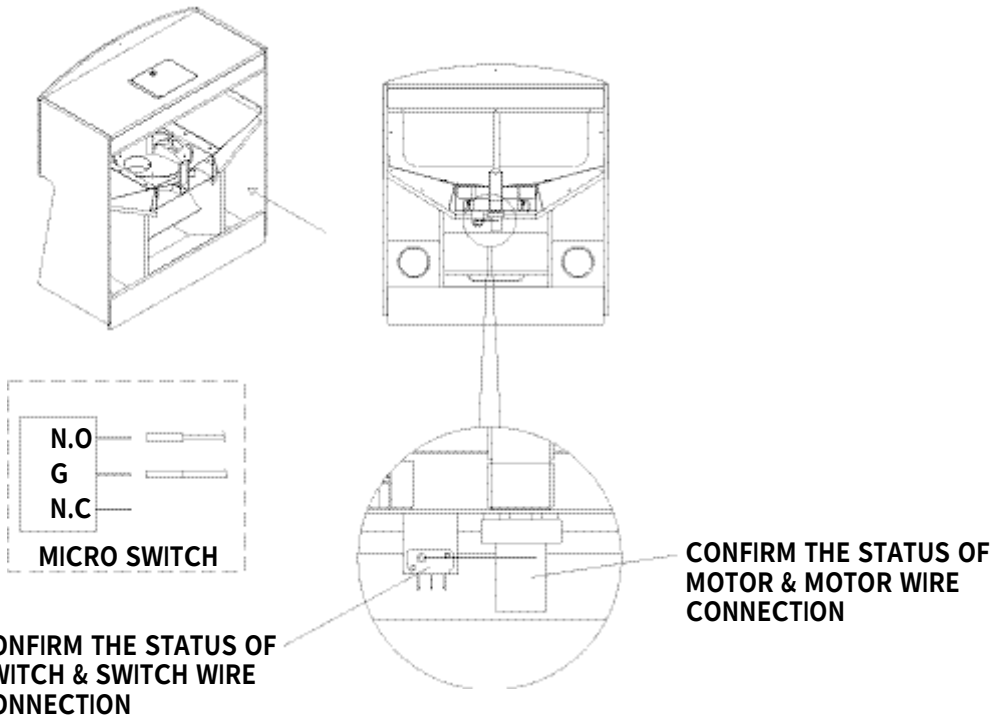

8. OPTION

8-1 TICKET DOOR OPTION

OPTION 1
TICKET DISPENSER INSTALLED

DELTRONIC LABS
TICKET DISPENSER

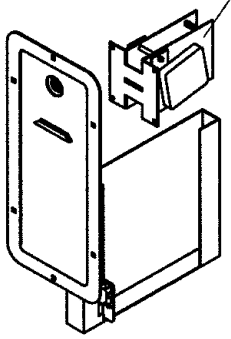

OPTION 2
BILL ACCEPTOR INSTALLED

- MARS BILLACCEPTOR
- AE2400 SERIES UPSTACKER
- 115 VAC MODEL

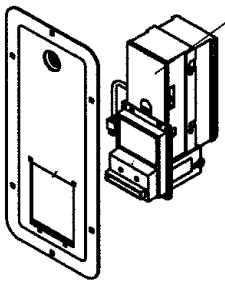

8-2 COIN DOOR OPTION

OPTION 1
2 COIN INSTALLED

COIN SELECTOR

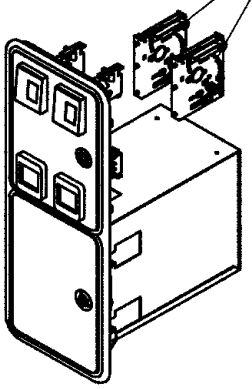

OPTION 2
1 COIN / 1 BILL ACCPTOR INSTALLED

- MARS BILLACCEPTOR
- AE2400 SERIES UPSTACKER
- 115 VAC MODEL

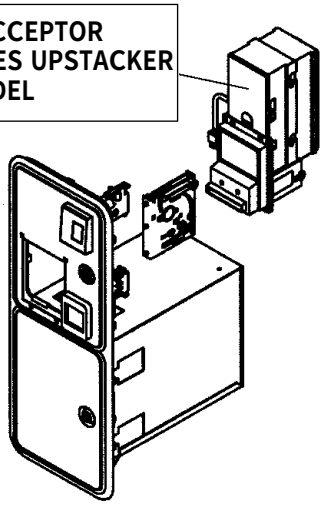

9. DIP S/W Description

CONTENTS \ DIP		DIP1	DIP2	DIP3	DIP4	DIP5	DIP6	DIP7	DIP8
DEBUG MODE	IN USE	OFF							
	NOT IN USE	ON							
MODE	PRIZE MODE		OFF	OFF					
	TICKET MODE		ON	OFF					
	GAME MODE		OFF	ON					
PAUSE MODE	IN USE								ON
	NOT IN USE								OFF
WARNING SOUND	IN USE				ON				
	NOT IN USE				OFF				
DIP S/W NOT IN USE						OFF	OFF	OFF	

钝 To put the mode into the prize vending machine, you set up “1CREDITS/1PRIZE” in the setting mode of SETUP 2. Whenever the play the prize is given freely.

钝 In case of the ticket dispenser, you can five away the ticket(s) free of charge in the SETUP 3(ONLY FOR THE TICKET MODE) as t he following :

1 TICKET / 0 POINTS … 1 ticket free
2 TICKET / 0 POINTS … 2 ticket free
3 TICKET / 0 POINTS … 3 ticket free

10. ASSEMBLY DRAWING AND PARTS LIST

10-1 ASSEMBLING CABINET LOW(1)

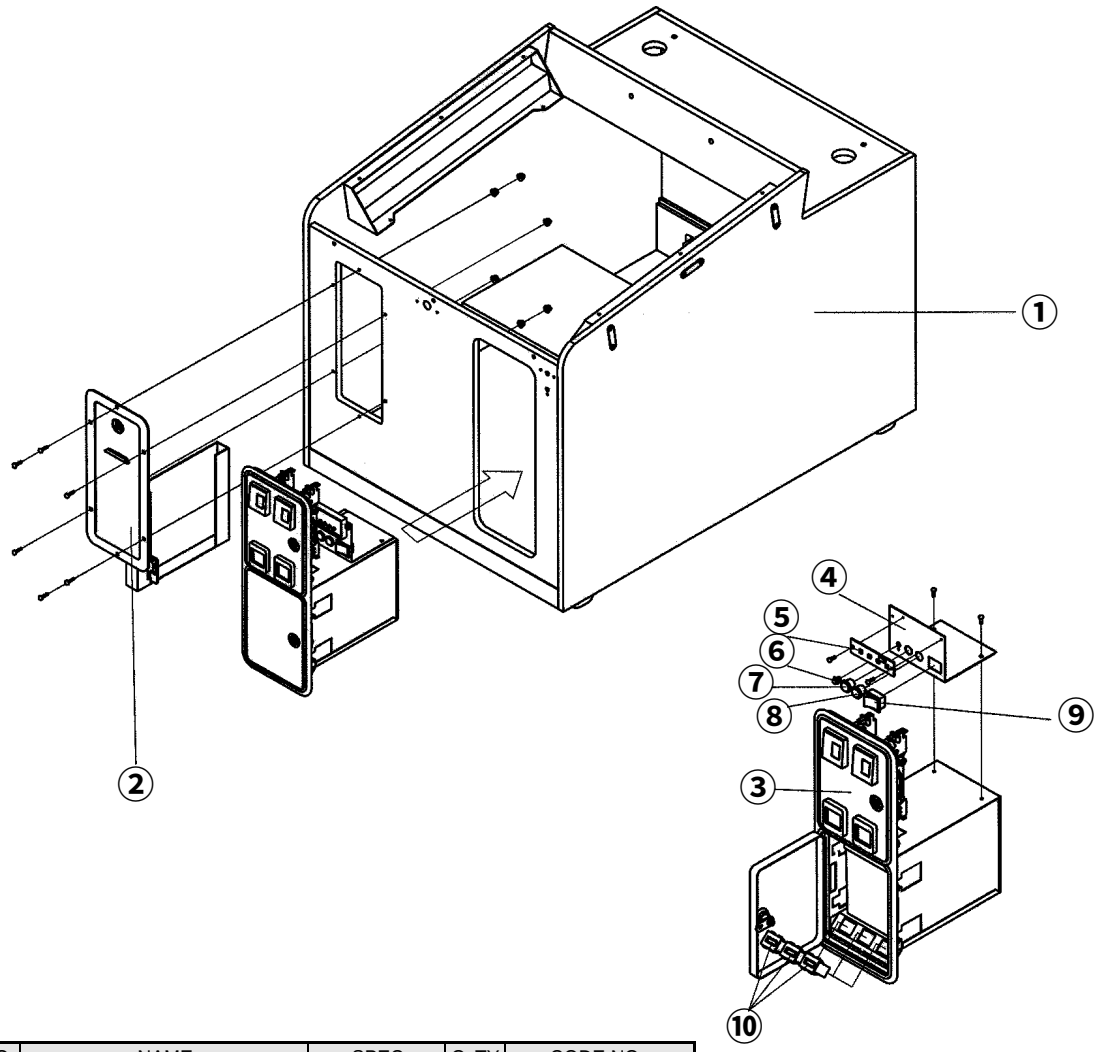

NO	NAME	SPEC	Q'TY	CODE NO.
①	CABINET LOW		1	MHAT0WOO002
②	TICKET DISPENSER DOOR	AMTD100A	1	AHAM0PRE001
③	COIN DOOR ASS'Y	AMCD-200B	1	AZZZ0COD001
④	TEST BUTTON BRACKET		1	MHAM1MEP015
⑤	MAIN CONTROL BOARD		1	
⑥	VOLUME	BA25Y-500Ω	1	MELE0VOL003
⑦	PUSH BUTTON SWITCH	412W	1	MELE0PUS002
⑧	PUSH BUTTON SWITCH	412R	1	MELE0PUS001
⑨	ROCKER SWITCH	T-120 4P	1	MELE0SWI004
⑩	COUNTER	AMMC-612	3	MZZZ0COU001

10-2 ASSEMBLING CABINET LOW(2)

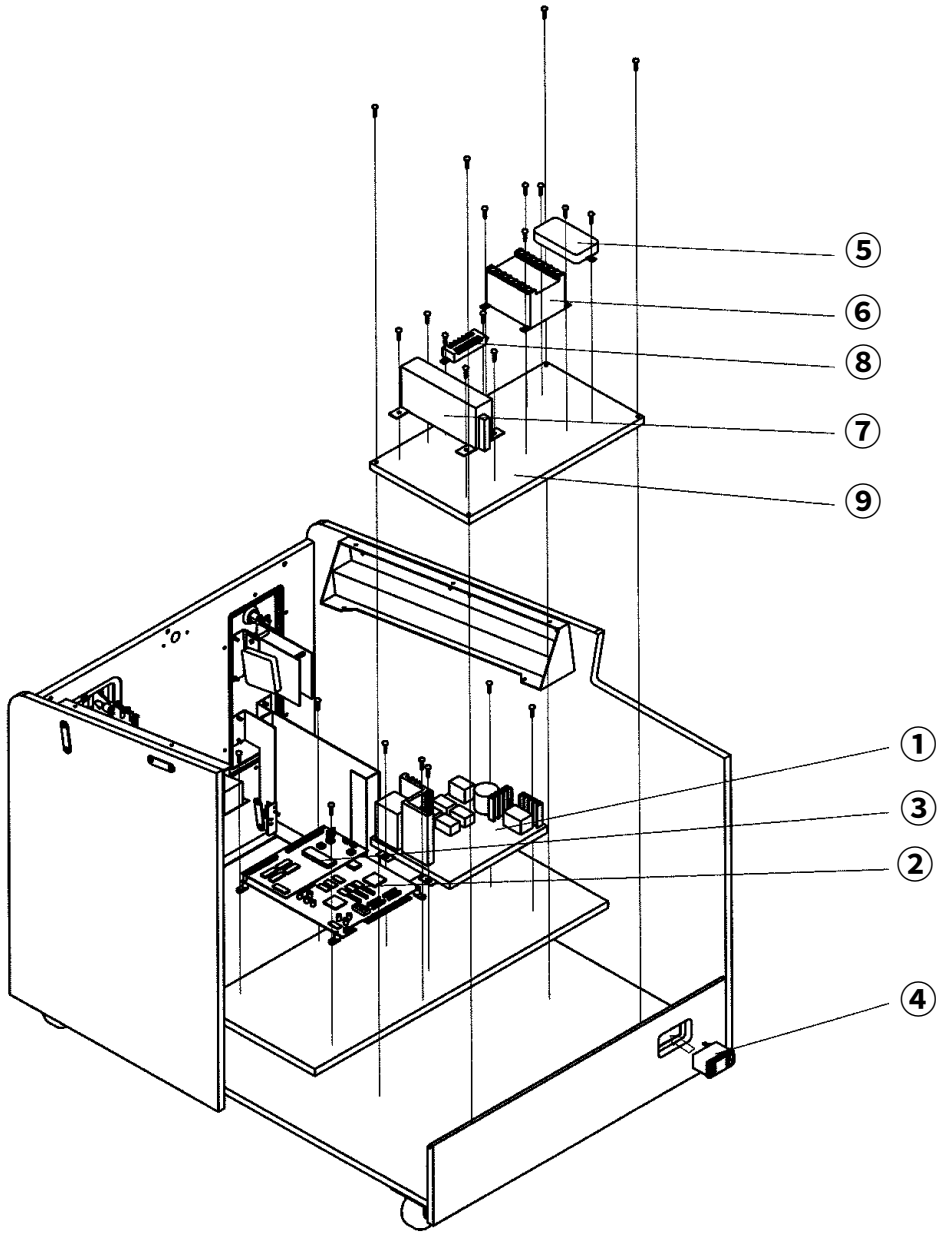

NO	NAME	SPEC	Q'TY	CODE NO.	NO	NAME	SPEC	Q'TY	CODE NO.
①	MONITOR BOARD		1	MHAM0PCB001	⑥	TRANSFORMER		1	MELE0TRF016
②	MAIN		1	AHAM0PCB006	⑦	POWER-SMPS	SF3121	1	MELE0SMP015
③	I/O PCB ASS'Y		1	AHAM0PCB007	⑧	TERMINAL BLOCK	6P	1	MELE0TEB001
④	ROCKER SWITCH	0717-1S	1	MELE0SWI001	⑨	MDF TRANSFORMER		1	MHAM0WO006
⑤	NOISE FILTER	250V-10A	1	MELE0NOI001	⑩				

10-3 ASSEMBLING CABINET LOW(3)

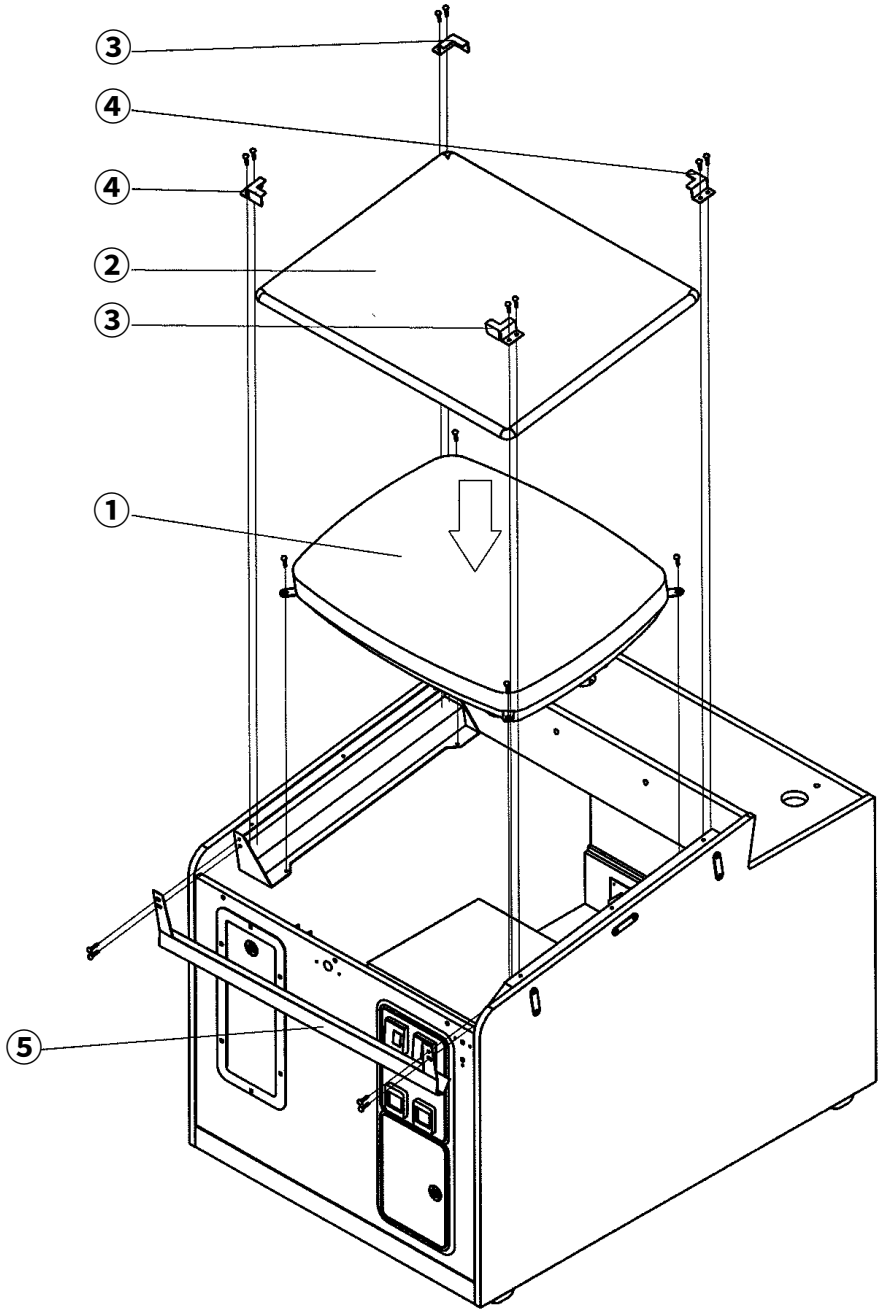

NO	NAME	SPEC	Q'TY	CODE NO.	NO	NAME	SPEC	Q'TY	CODE NO.
①	MONITOR	CRT CGA 29inch	1	MZZZ0CRT007	④	FRONT GLASS SUPPORT-B		2	MHAM0MEP009
②	FRONT GLASS		1	MHAM0GLA001	⑤	SPILL GUTTER		1	MHAT0MEP001
③	FRONT GLASS SUPPORT-A		2	MHAM0MEP008					

10-4 ASSEMBLING CABINET LOW(4)

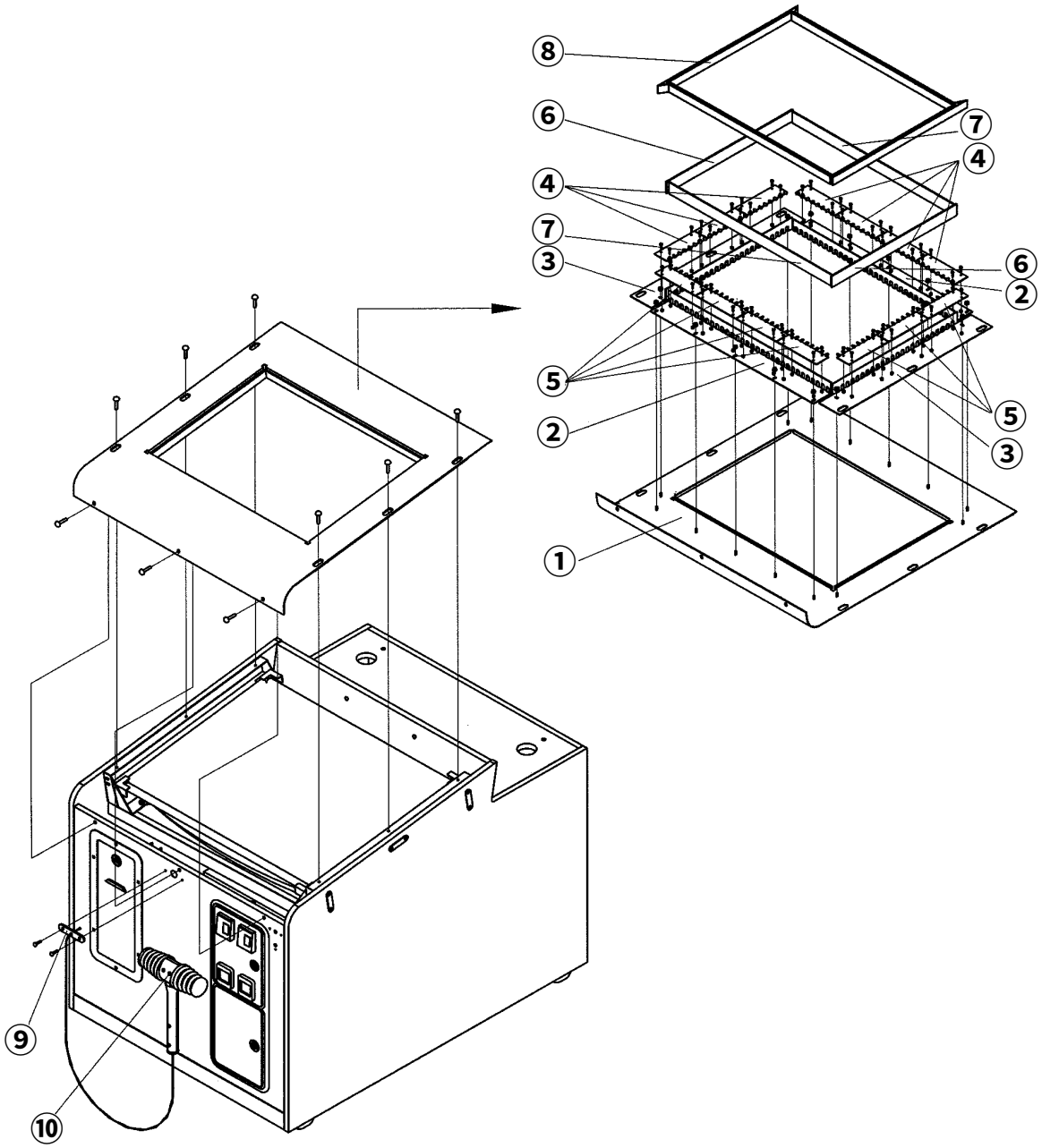

NO	NAME	SPEC	Q'TY	CODE NO.	NO	NAME	SPEC	Q'TY	CODE NO.
①	FRONT COVER		1	MHAM0MEP007	⑥	SENSOR COVER ACRYL-A		2	MHAM0ACR004
②	SENSOR BRACKET R/L		2	MHAM0MEP013	⑦	SENSOR COVER ACRYL-B		2	MHAM0ACR005
③	SENSOR BRACKET UP/DOWN		2	MHAM0MEP014	⑧	FRONT GLASS HOLD RUBBER AB		1	MHAM0RUB004
④	SENSOR PCB ASS'Y-A	EMITION	7	AHAM0PCB009	⑨	HAMMER HOLD BRACKET		2	MHAM0MEP011
⑤	SENSOR PCB ASS'Y-B	RECEIVER	7	AHAM0PCB008	⑩	HAMMER ASS'Y		1	AHAM0PLA001

10-5 ASSEMBLING CABINET UP(1)

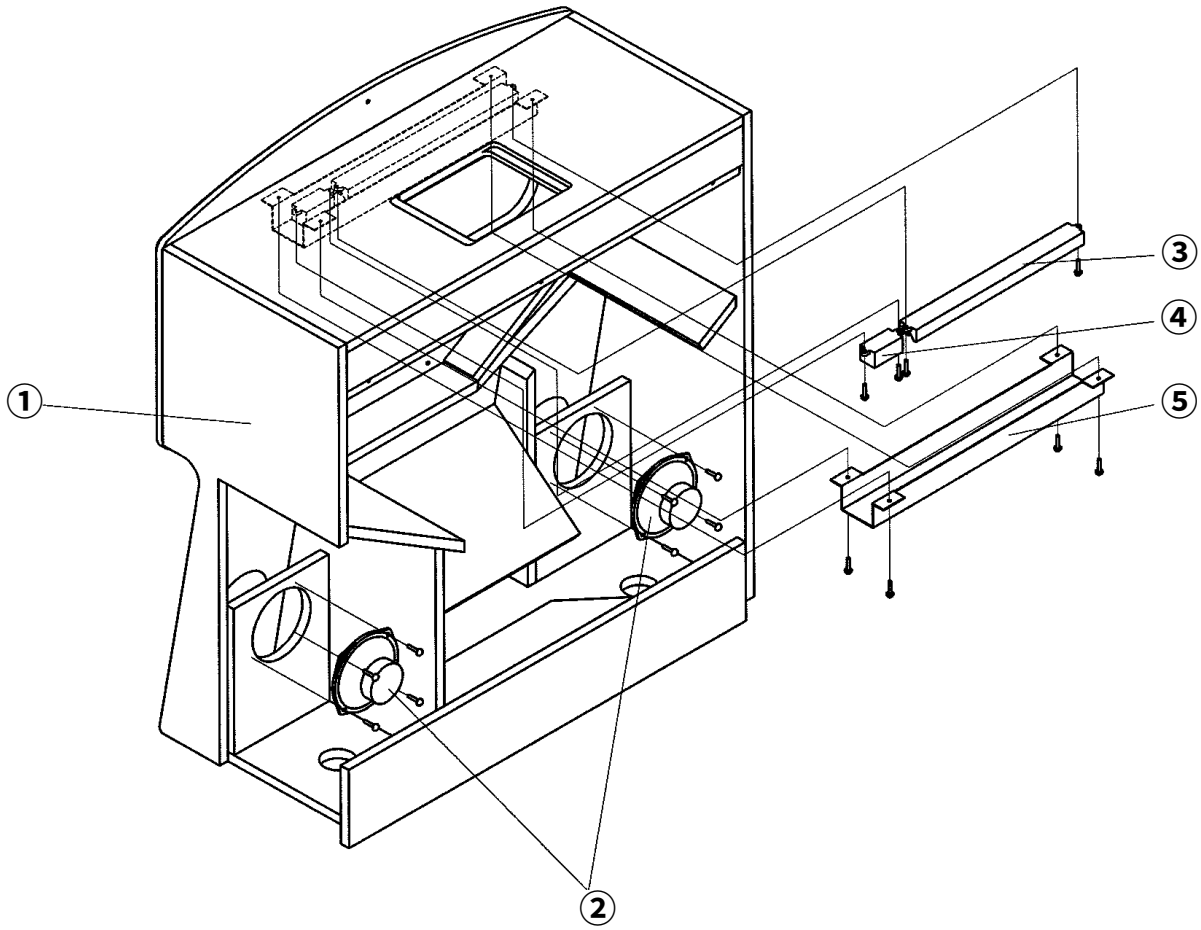

NO	NAME	SPEC	Q'TY	CODE NO.	NO	NAME	SPEC	Q'TY	CODE NO.
①	CABINET UP		1	MHAT0WOO001	④	INVERTER		1	MELE0INV003
②	SPEAKER	4 inch	2	MZZZ0SPE001	⑤	CCFL COVER ACRYL		1	MHAT0ACR003
③	LAMP CASE ASS'Y	300mm	1	MDRE0PLA008					

10-6 ASSEMBLING CABINET UP(2)

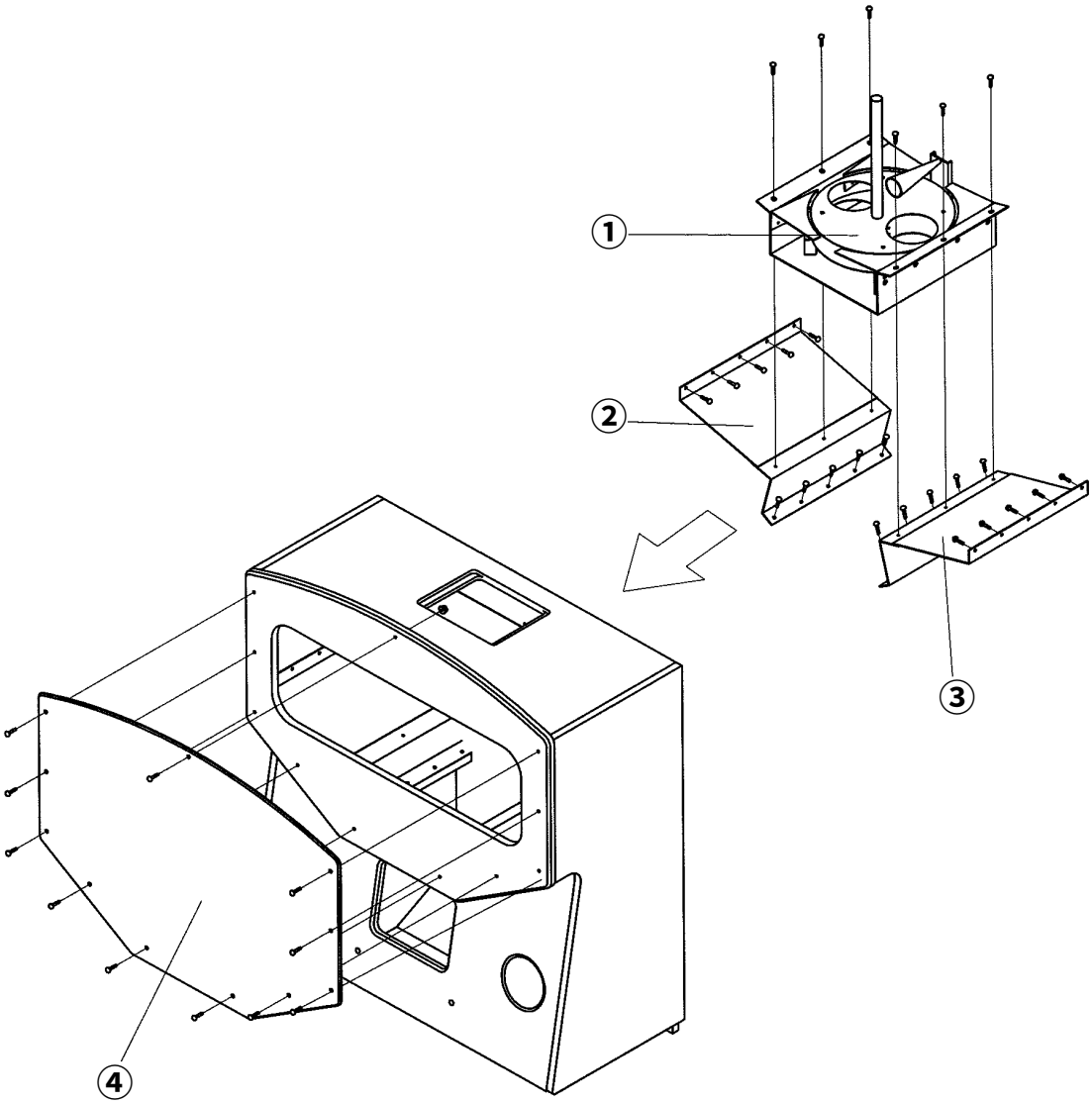

NO	NAME	SPEC	Q'TY	CODE NO.	NO	NAME	SPEC	Q'TY	CODE NO.
①	CAPSULE DISPENSER ASS'Y		1	AHAT0MEP001	③	GUIDE BRACKET SUPPORT R		1	MHAM0MEP022
②	GUIDE BRACKET SUPPORT L		1	MHAM0MEP021	④	FRONT ACRYL		1	MHAT0ACR001

10-7 ASSEMBLING CAPSULE DISPENSER

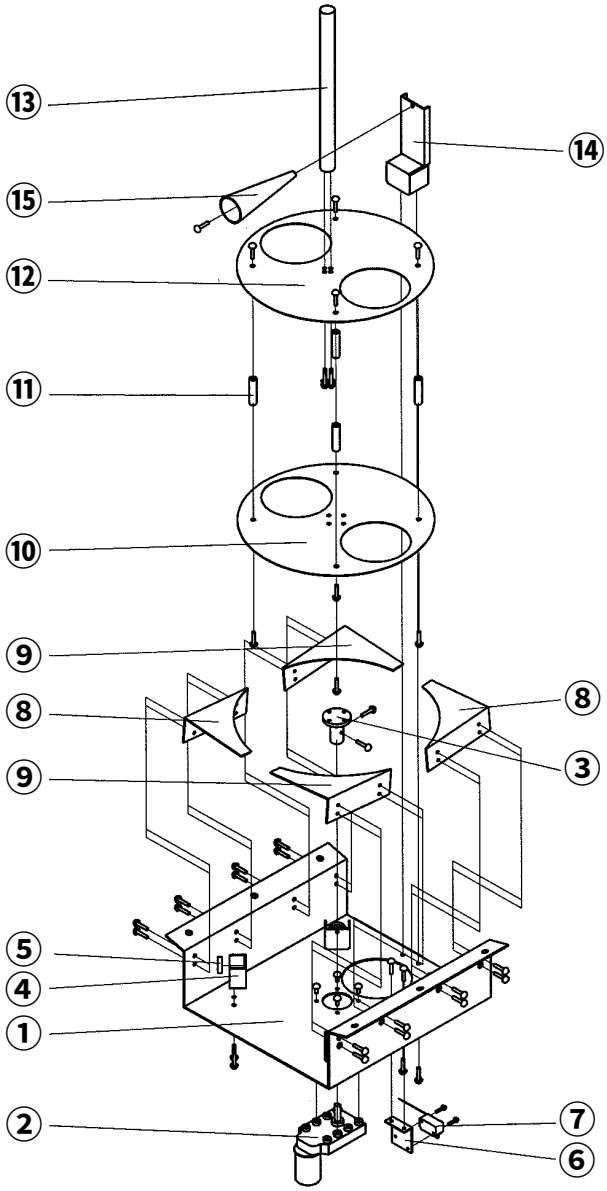

NO	NAME	SPEC	Q'TY	CODE NO.	NO	NAME	SPEC	Q'TY	CODE NO.
①	MAIN BRACKET		1	MHAM0MEP020	⑨	GUIDE BRACKET R		2	MHAM0MEP027
②	MOTOR	KGE-3448D 1:615	1	MMAL0MOT007	⑩	ROTATE LOW		1	MHAM0MEP024
③	MOTOR SHAFT		1	MHAM0PRO003	⑪	SPACE SHAFT		4	MHAM0PRO002
④	ROTATE SUPPORT BRACKET		4	MHAM0MEP029	⑫	ROTATE UP		1	MHAM0MEP023
⑤	BEARING	RW-26	4	MZZZ0BEA031	⑬	MIX SHAFT		1	MHAM0PRO001
⑥	SWITCH BRACKET		1	MHAM0MEP030	⑭	BLOCK SPRING BRACKET		1	MHAM0MEP025
⑦	MICRO SWITCH		1	MELE0MIC002	⑮	BLOCK SPRING		1	MMAL0SPR001
⑧	GUIDE BRACKET L		2	MHAM0MEP026					

11. GENERAL WIRING DIAGRAM

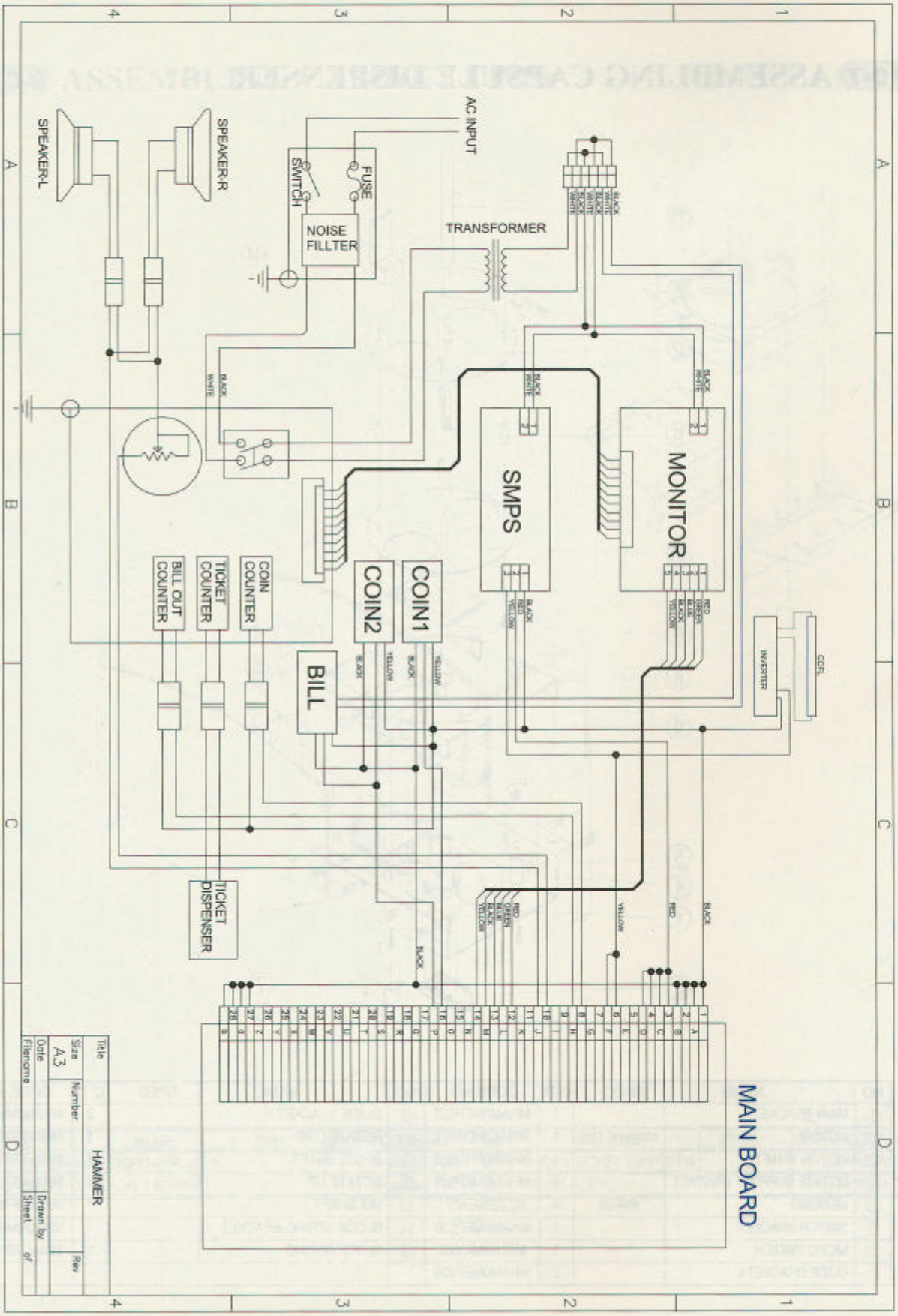

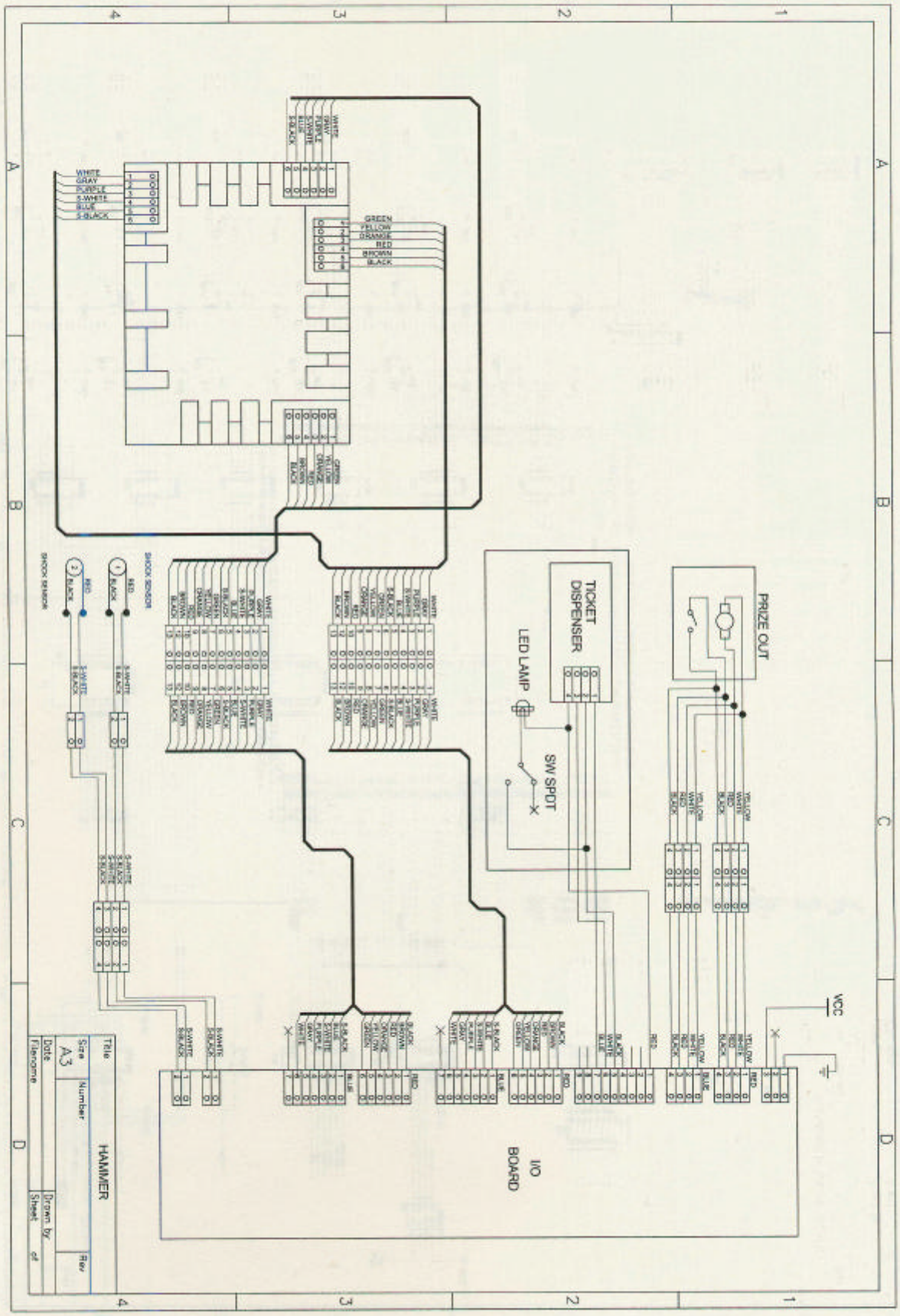
PRIZE OUT
TICKET DISPENSER
LED LAMP
SW SPOT
SHOCK SENSOR
I/O BOARD
VCC
HAMMER
Title
Size
A3
Number
Rev
Drawn by
Sheet
Date
Filename

12. SCHEMATIC FOR MAIN BOARD

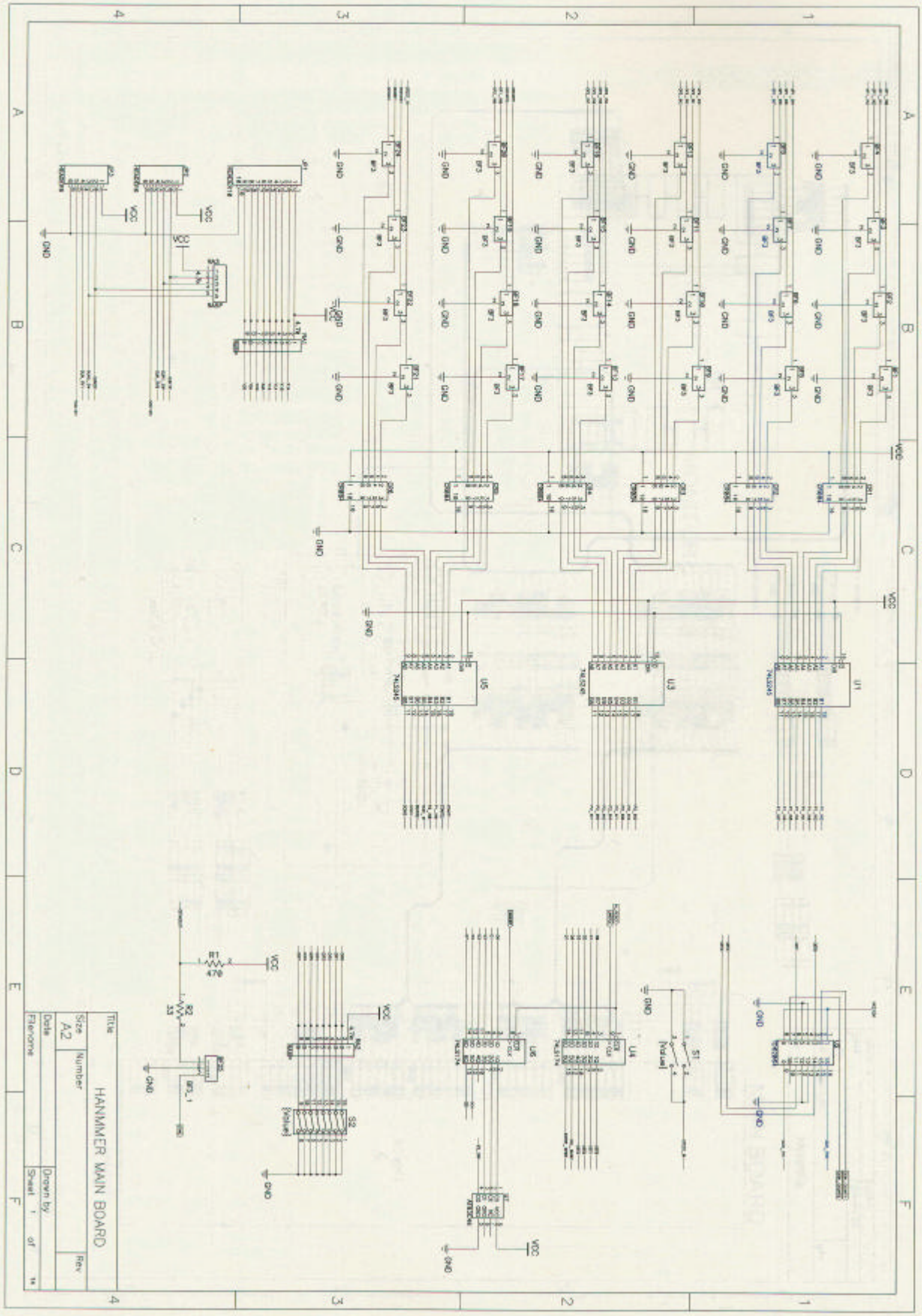

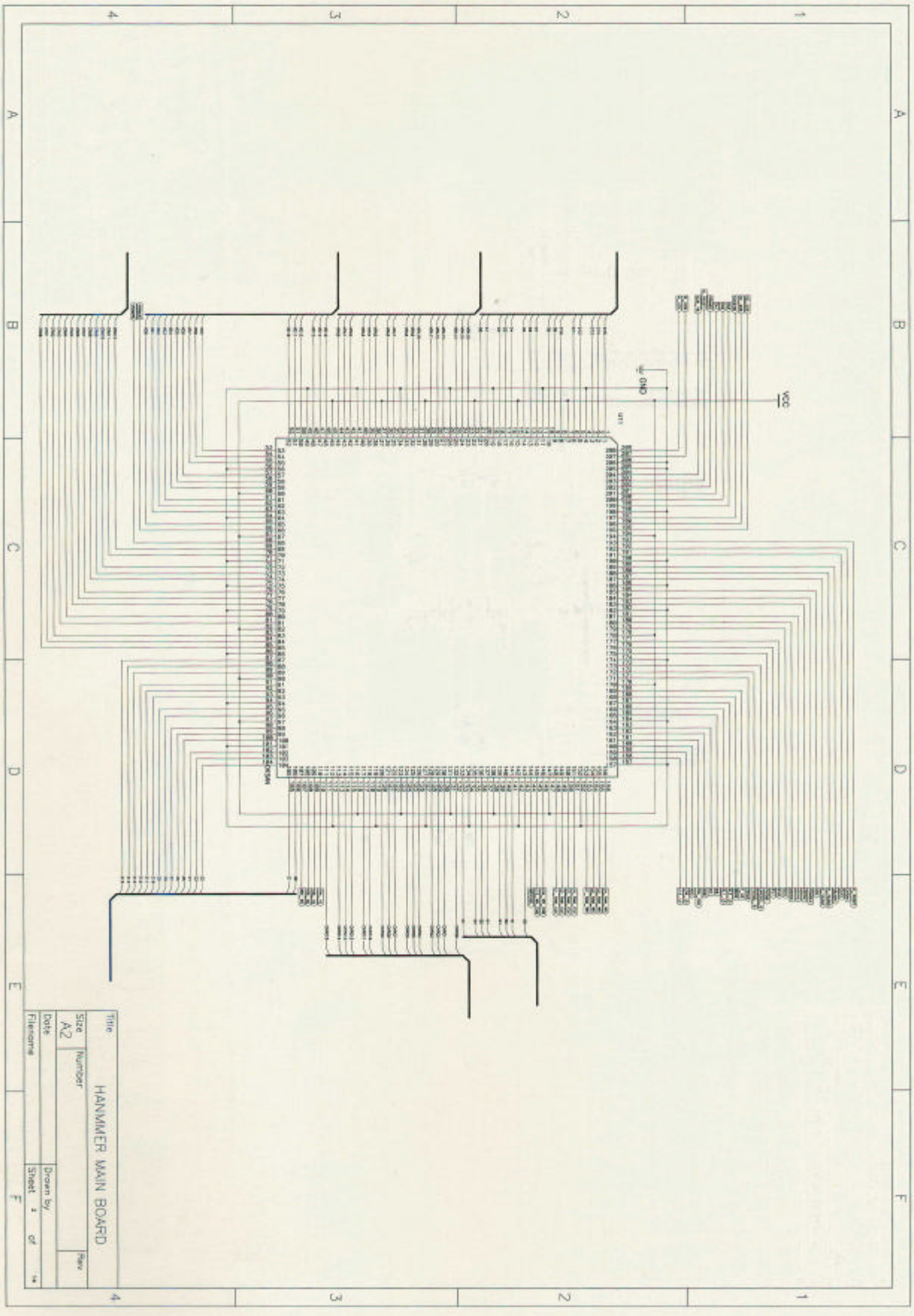
GND
VCC
U1
Title
HANMMER MAIN BOARD
Size
A2
Number
Rev
Date
Drawn by
Filename
Sheet 4 of 14

SCHEMATIC FOR MAIN BOARD

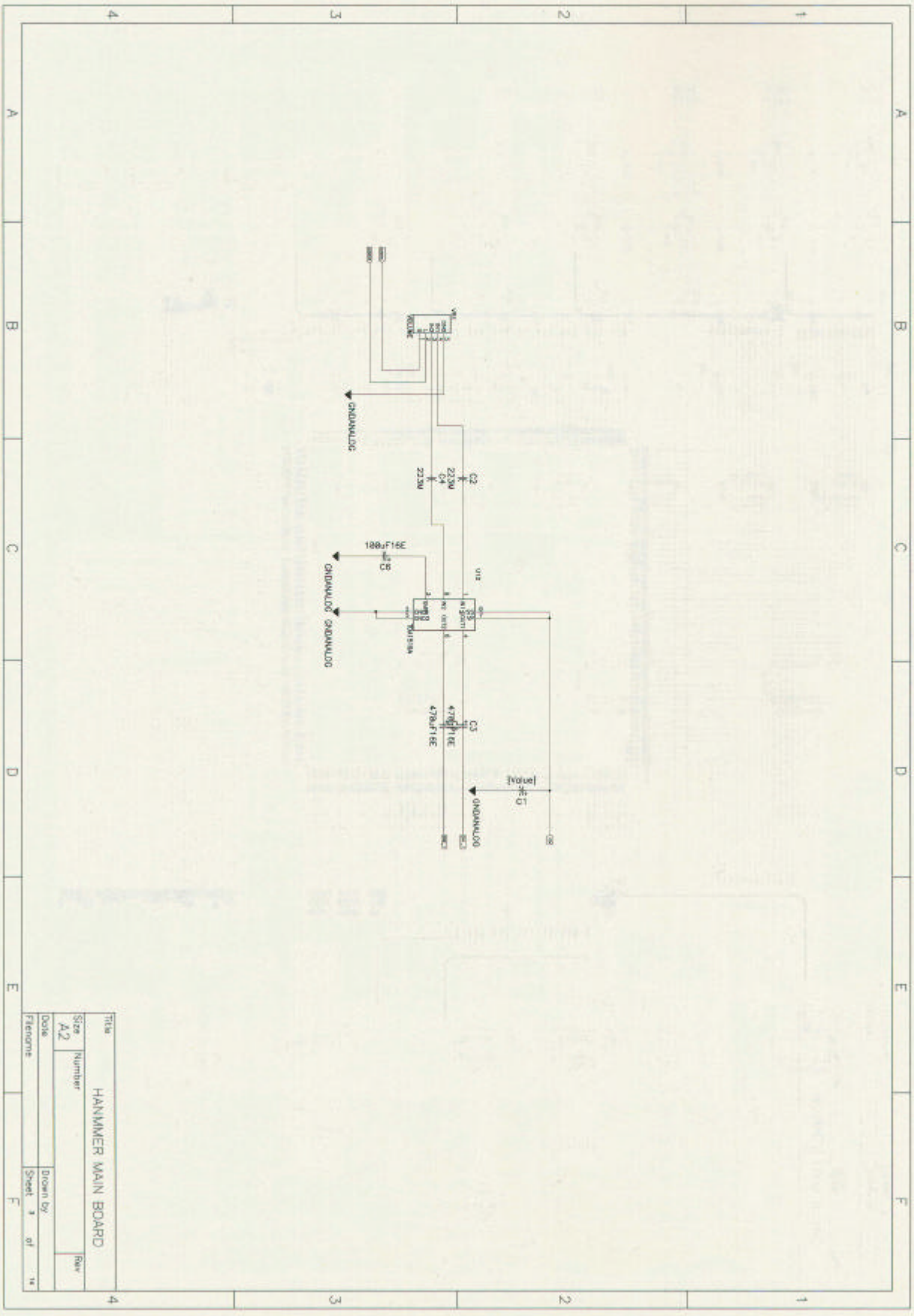

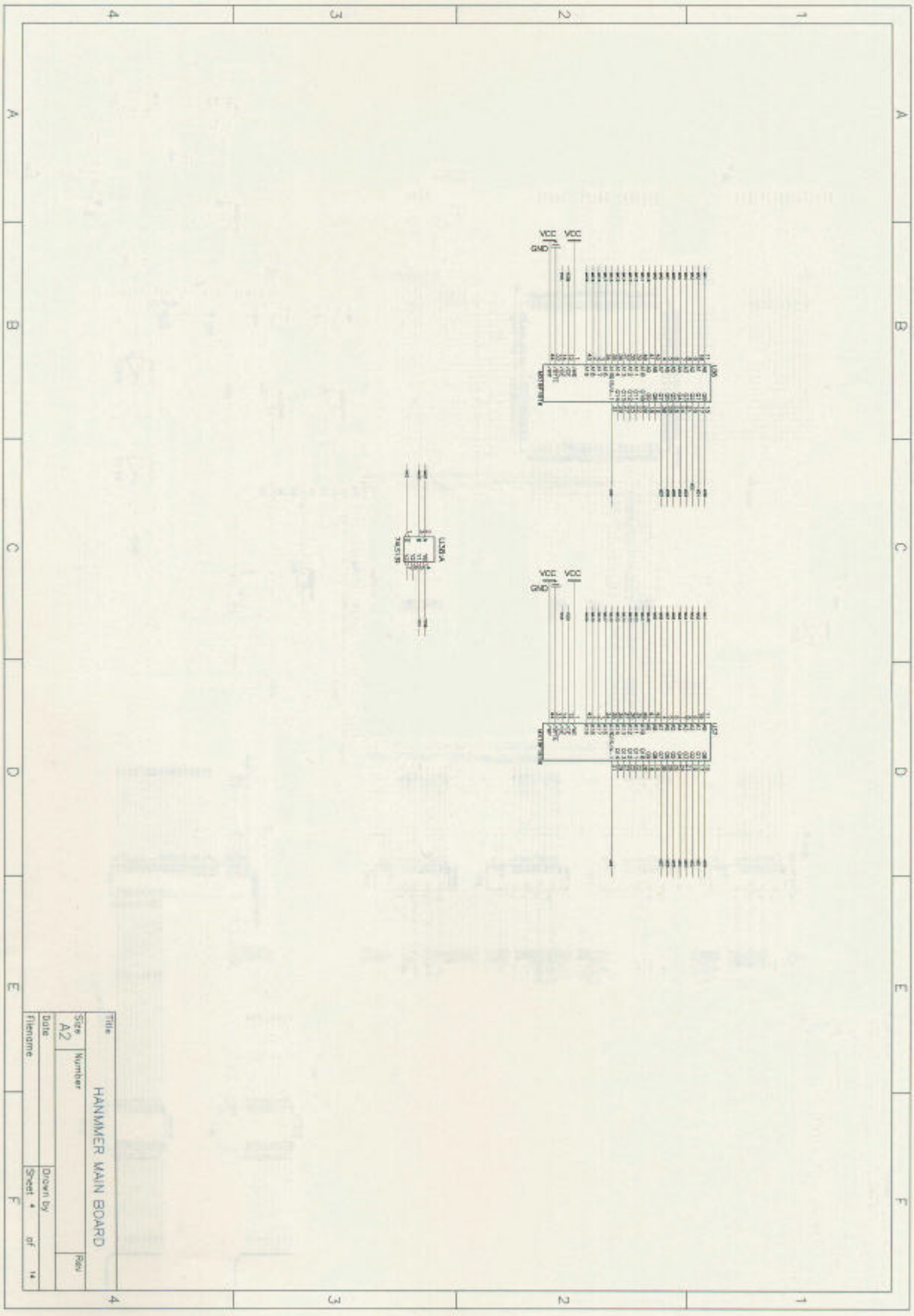
VCC
VCC
GND
VCC
VCC
GND
Title
HANMMER MAIN BOARD
Size
A2
Number
Rev
Date
Drawn by
Filename
Sheet 4 of 14

SCHEMATIC FOR MAIN BOARD

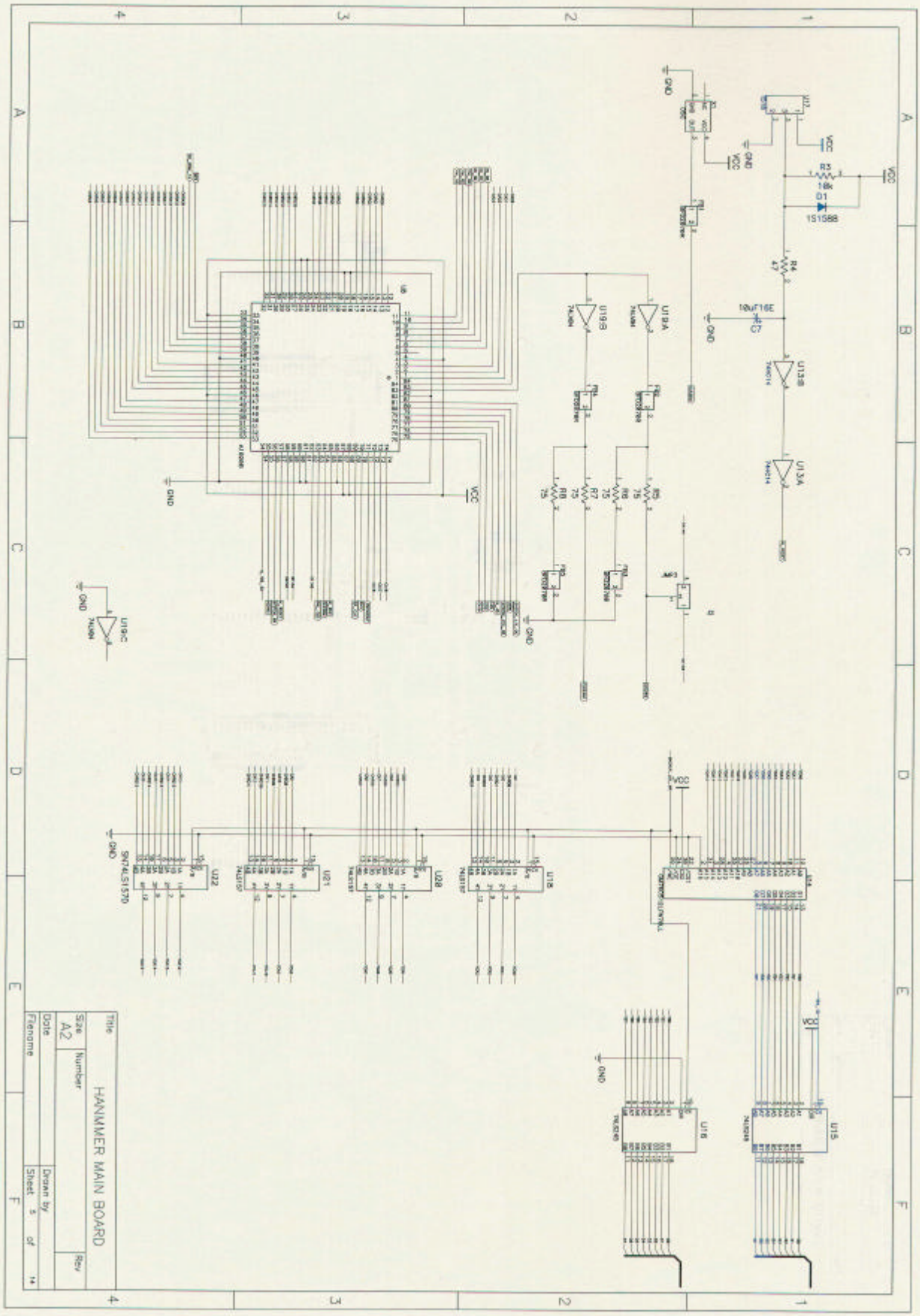

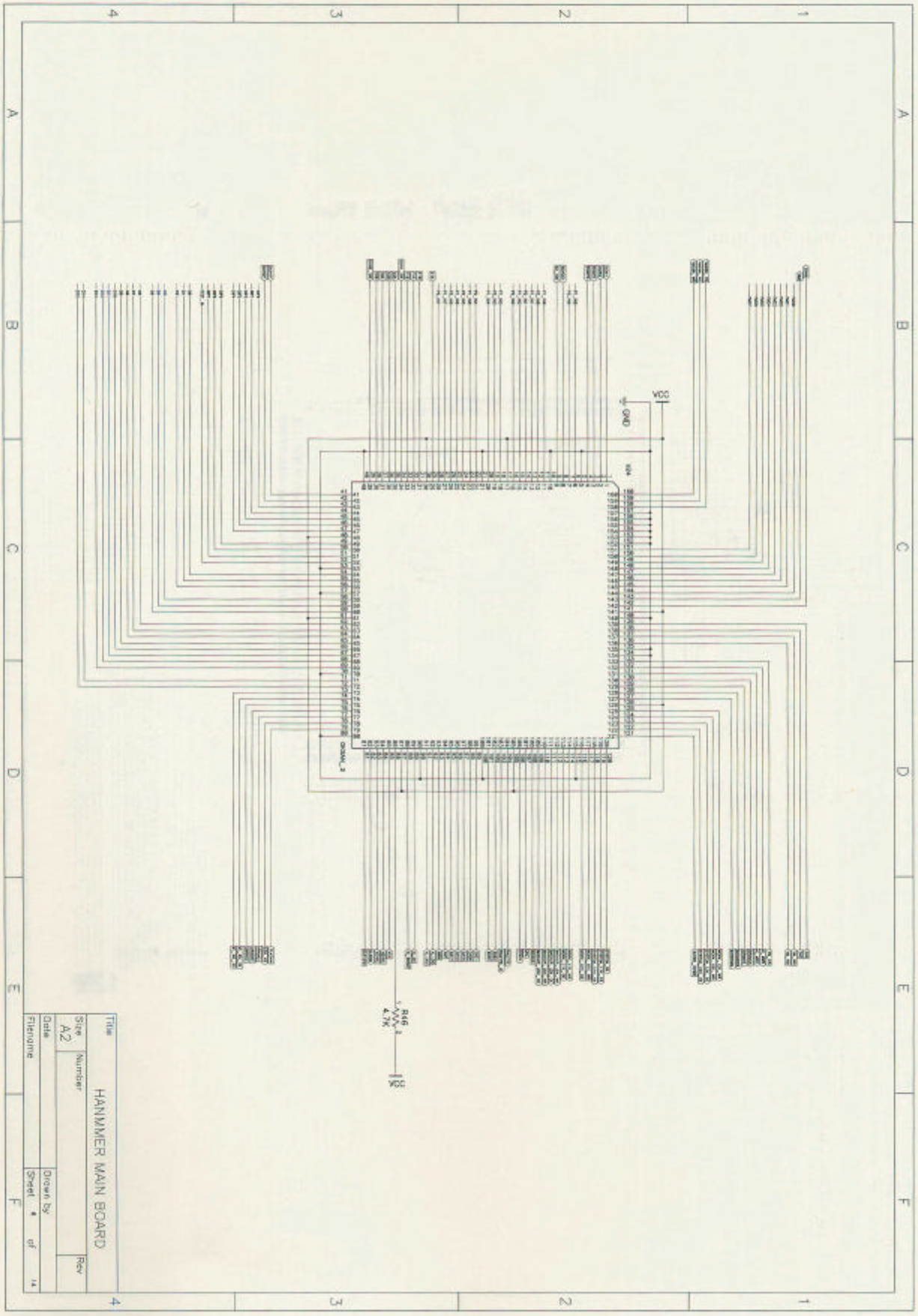
VDD
GND
R46
4.7K
Title
HANMMER MAIN BOARD
Size
A2
Number
Rev
Date
Drawn by
Filename
Sheet
of

SCHEMATIC FOR MAIN BOARD

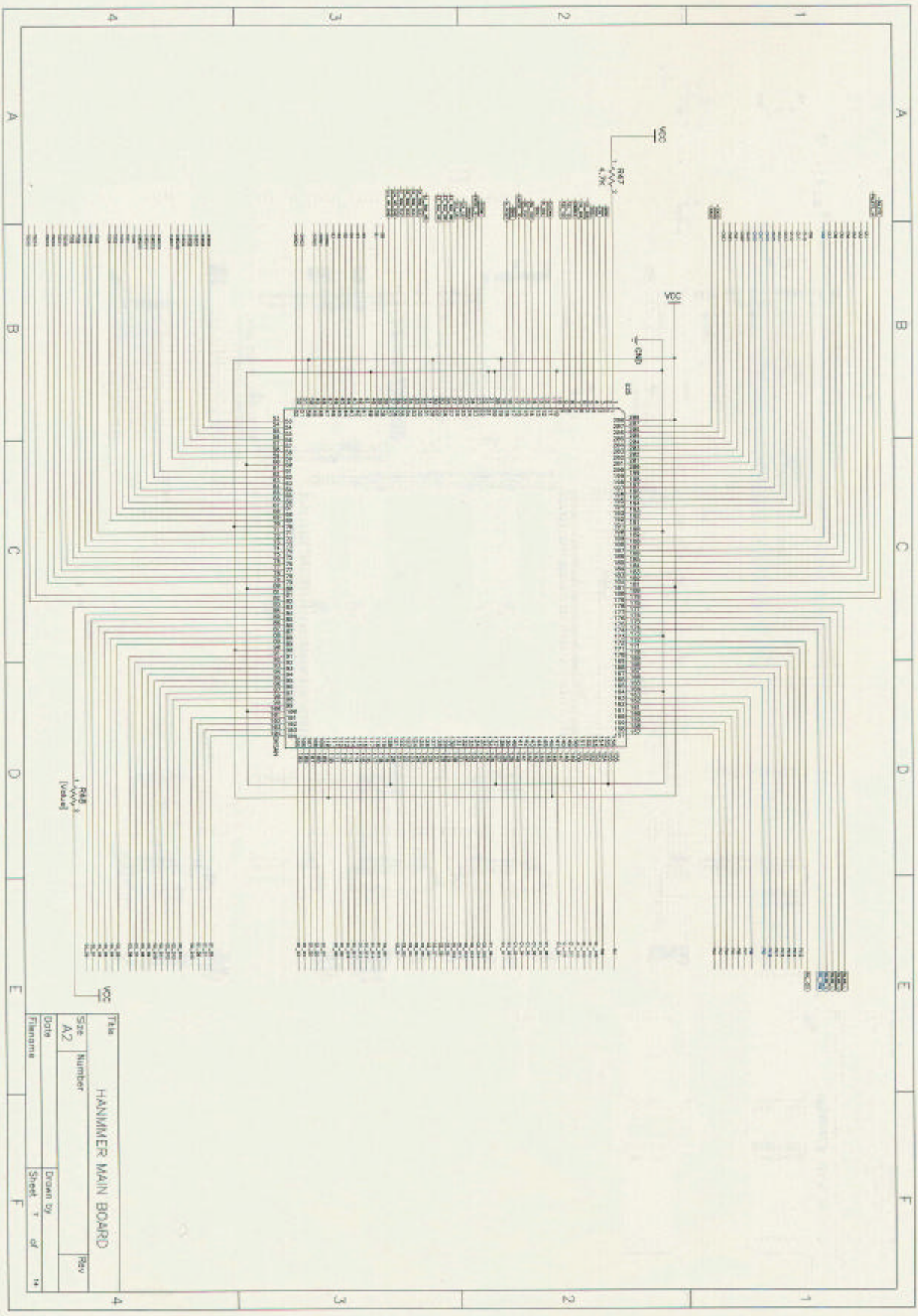

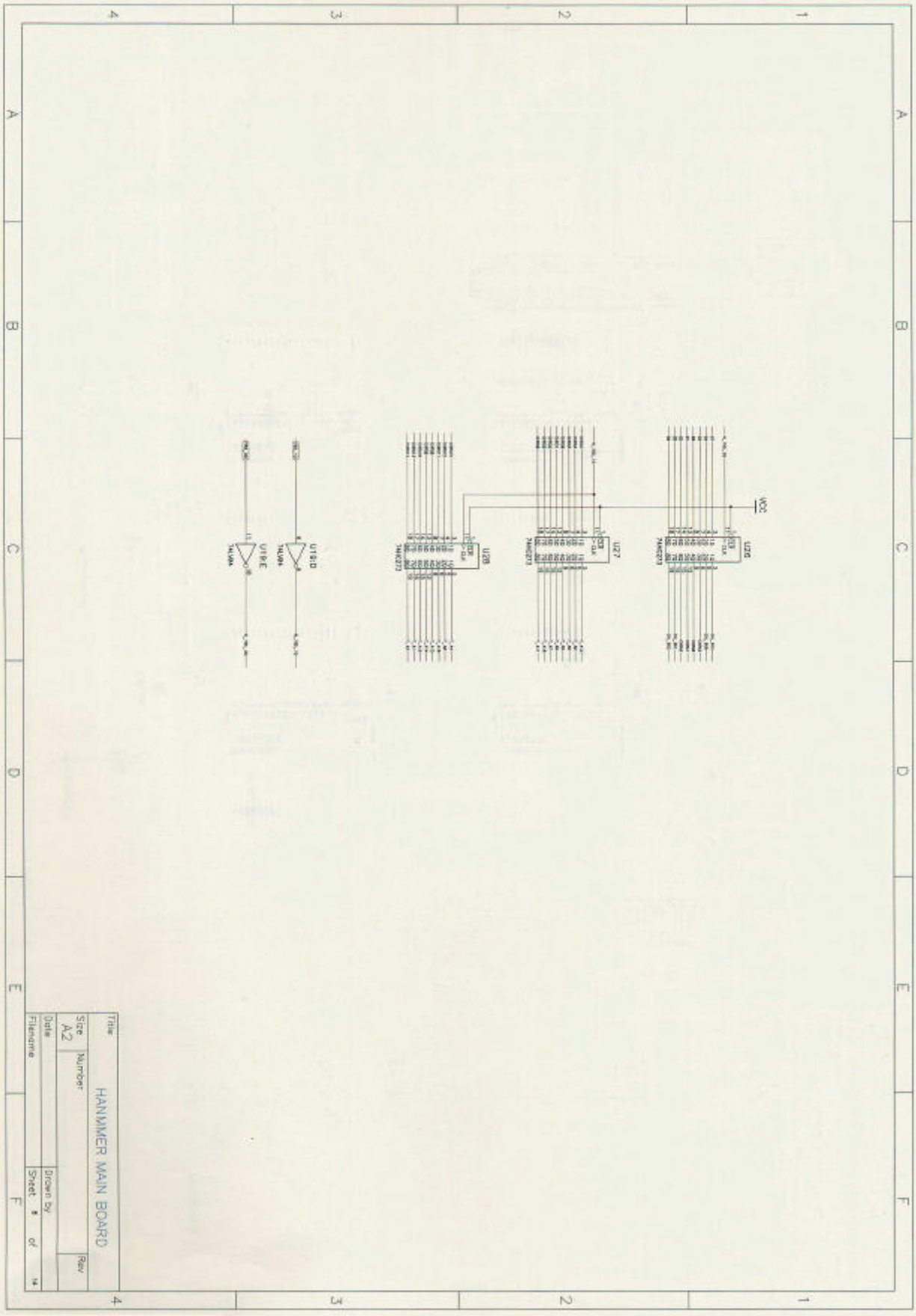
Title
HANMMER MAIN BOARD
Size
A2
Number
Rev
Date
Drawn by
Filename
Sheet 8 of 14
VCC

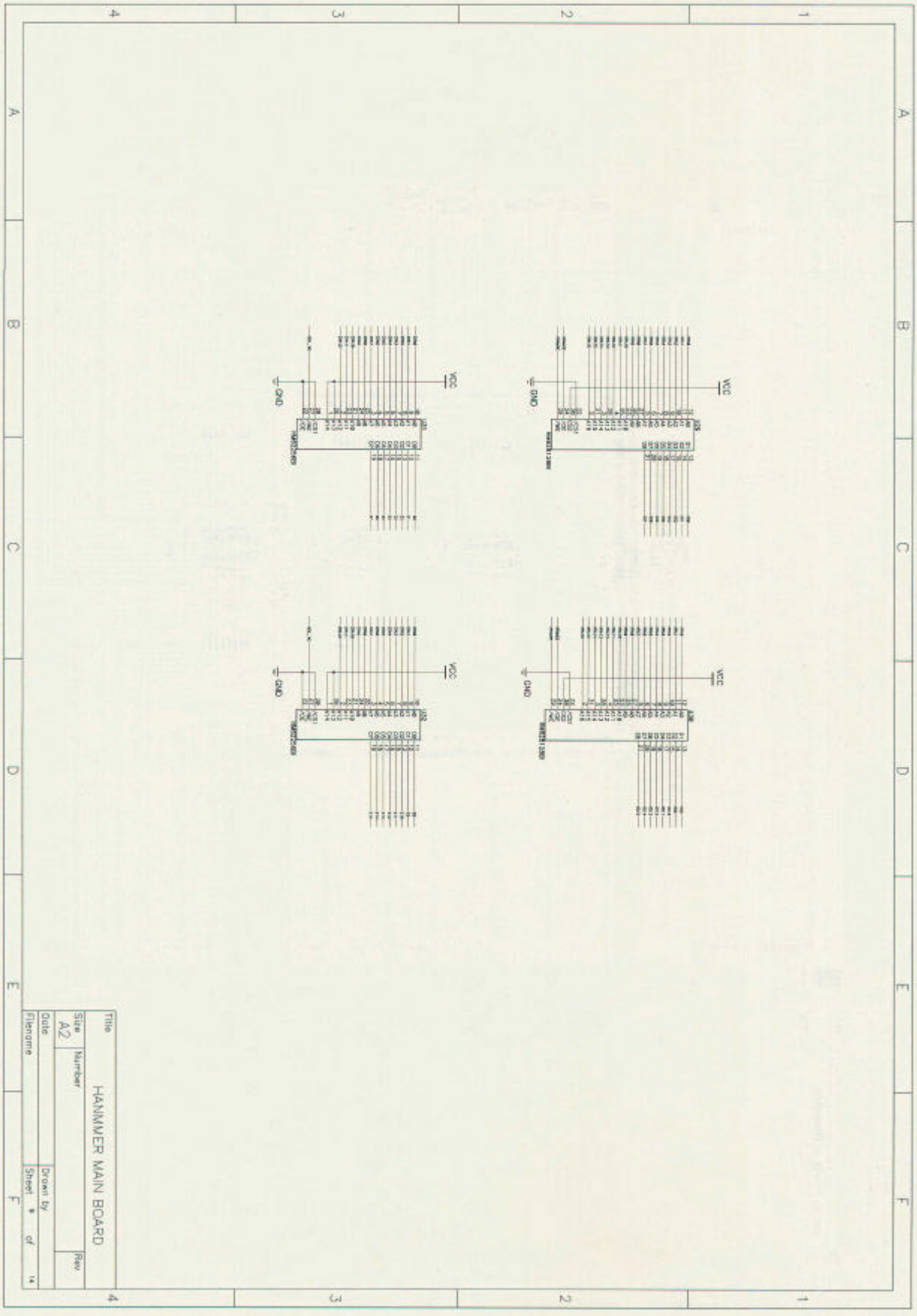
Title
HANNMER MAIN BOARD
Size
A2
Number
Rev
Date
Filename
Drawn by
Sheet 8 of 14

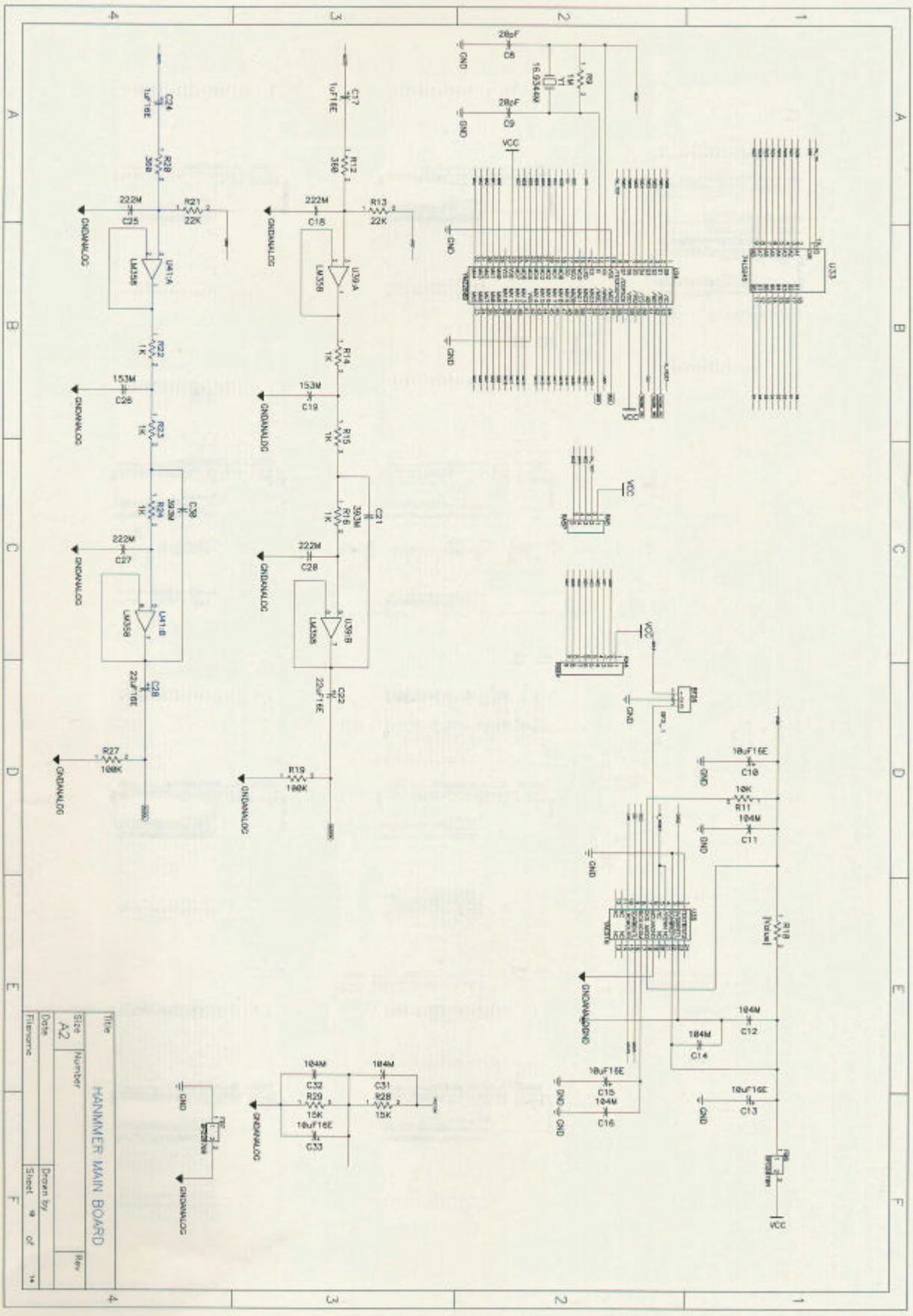
HANMMER MAIN BOARD
Title
Size
A2
Number
Rev
Date
Drawn by
Filename
Sheet 10 of 14
GND
VCC
GNDANALOG
U33
U41:A
U41:B
U39:A
U39:B
LM358
U41
R18
[Value]
R27
100K
R19
100K
R28
15K
R29
15K
R11
10K
C10
C11
C12
C13
C14
C15
C16
C17
C18
C19
C21
C22
C24
C25
C26
C27
C28
C31
C32
C33
C38
R21
22K
R13
22K
R22
1K
R23
1K
R24
1K
R14
1K
R15
1K
R16
1K
R28
360
R12
360
R9
1M
Y1
16.9344M
28pF
C8
C9
222M
153M
393M
10uF16E
104M
22uF16E
10uF16E

SCHEMATIC FOR MAIN BOARD

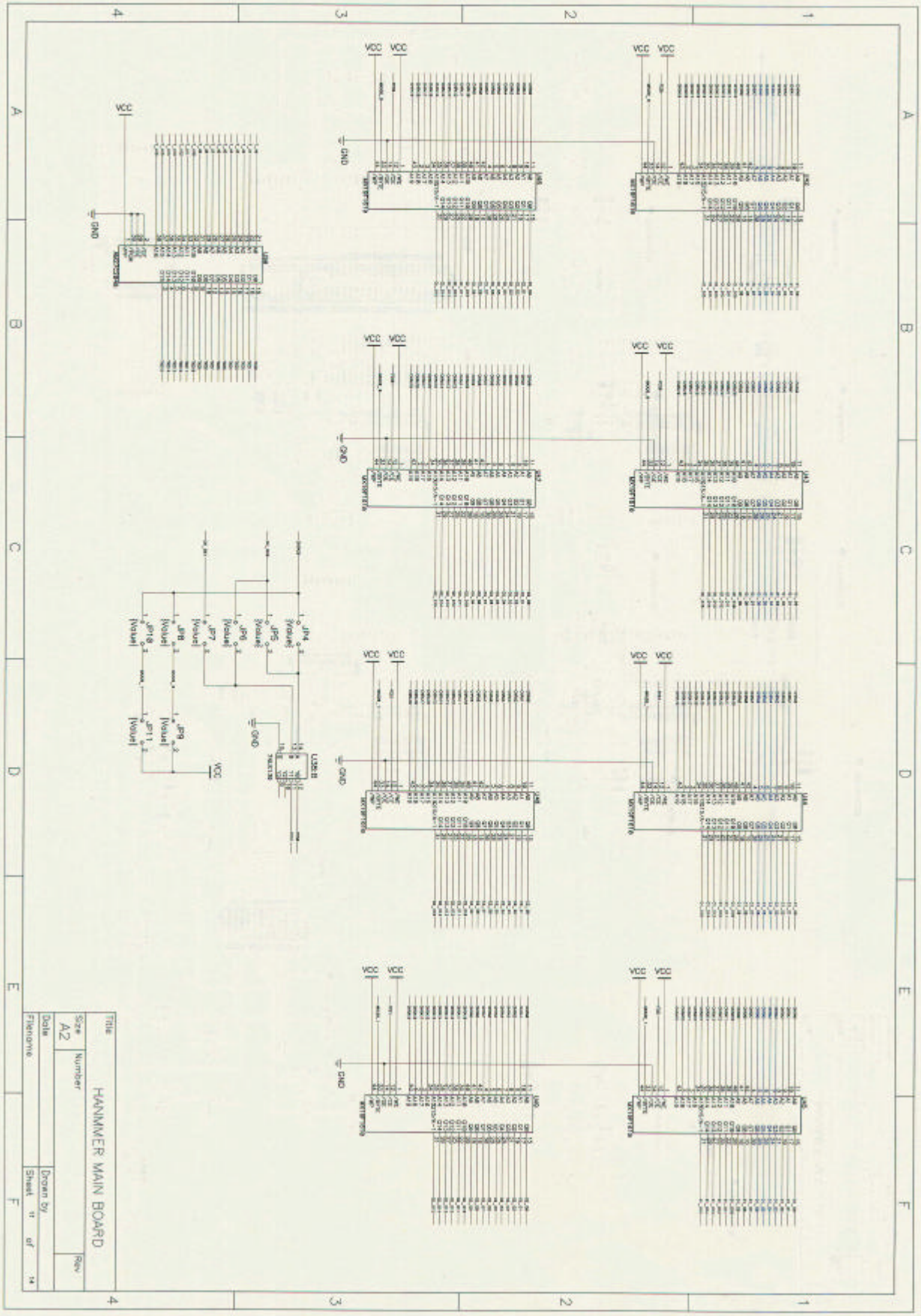

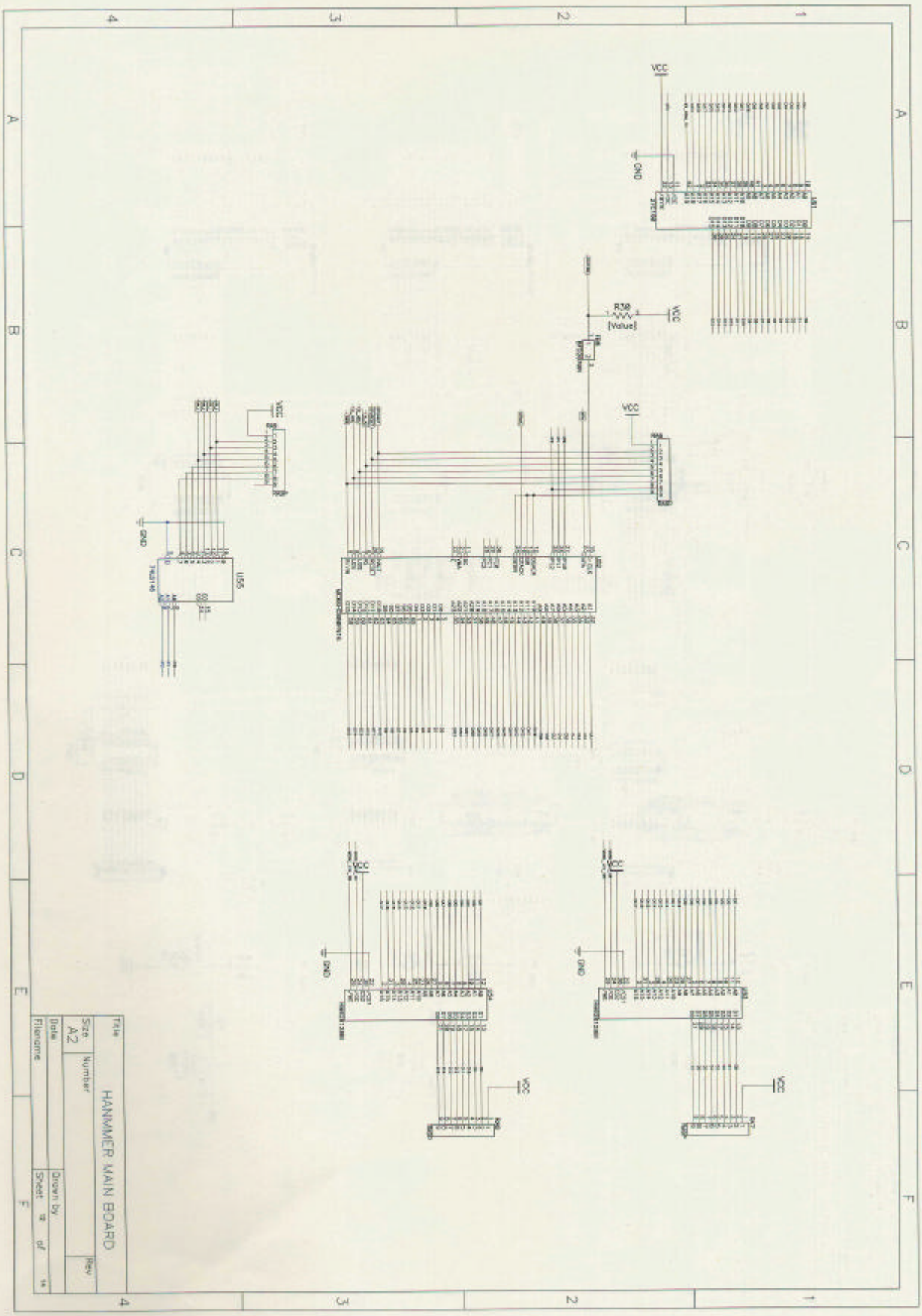
VCC
GND
R30
[Value]
U$1
Title
HANMMER MAIN BOARD
Size
A2
Number
Rev
Date
Drawn by
Filename
Sheet 12 of 14

SCHEMATIC FOR MAIN BOARD

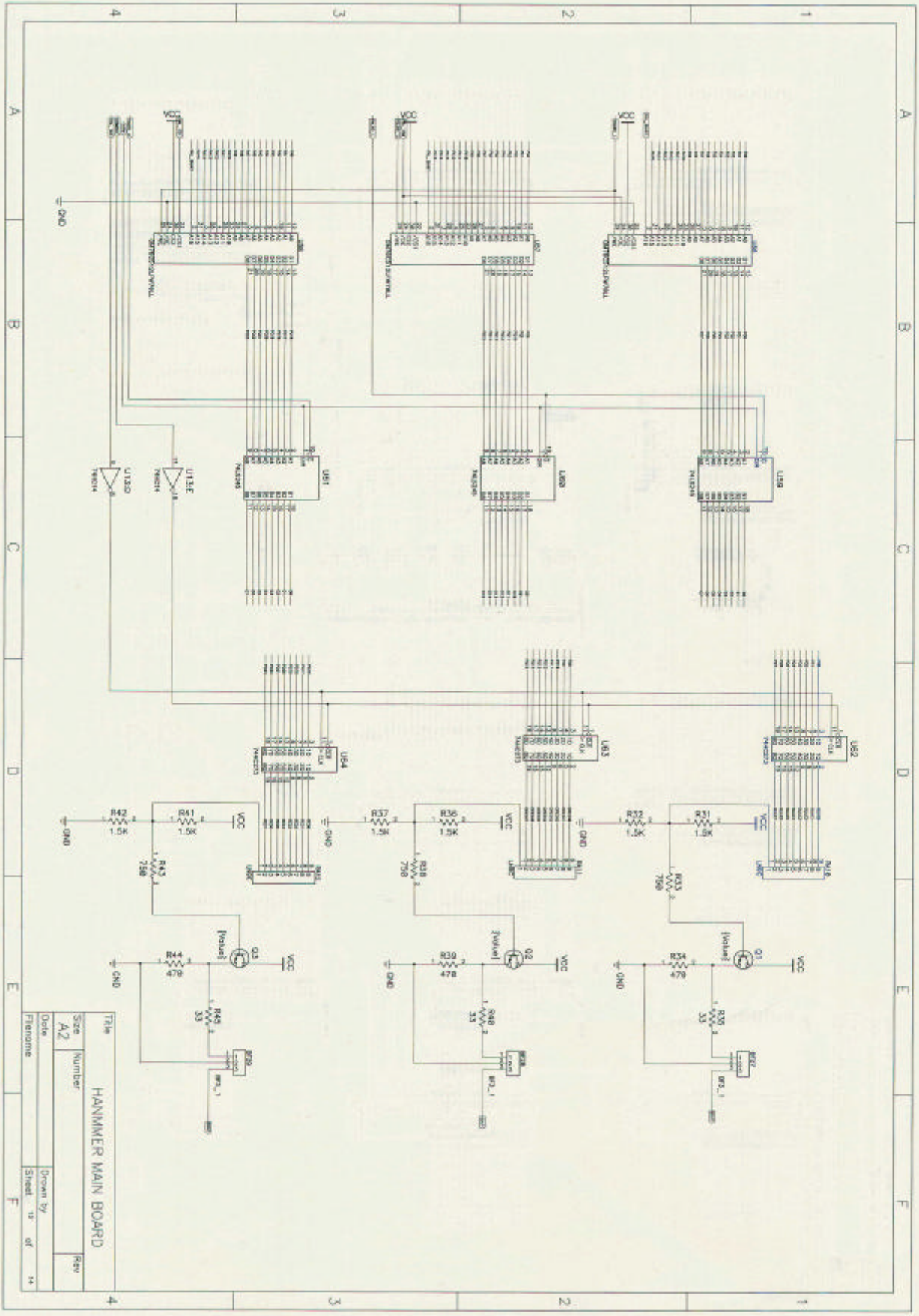

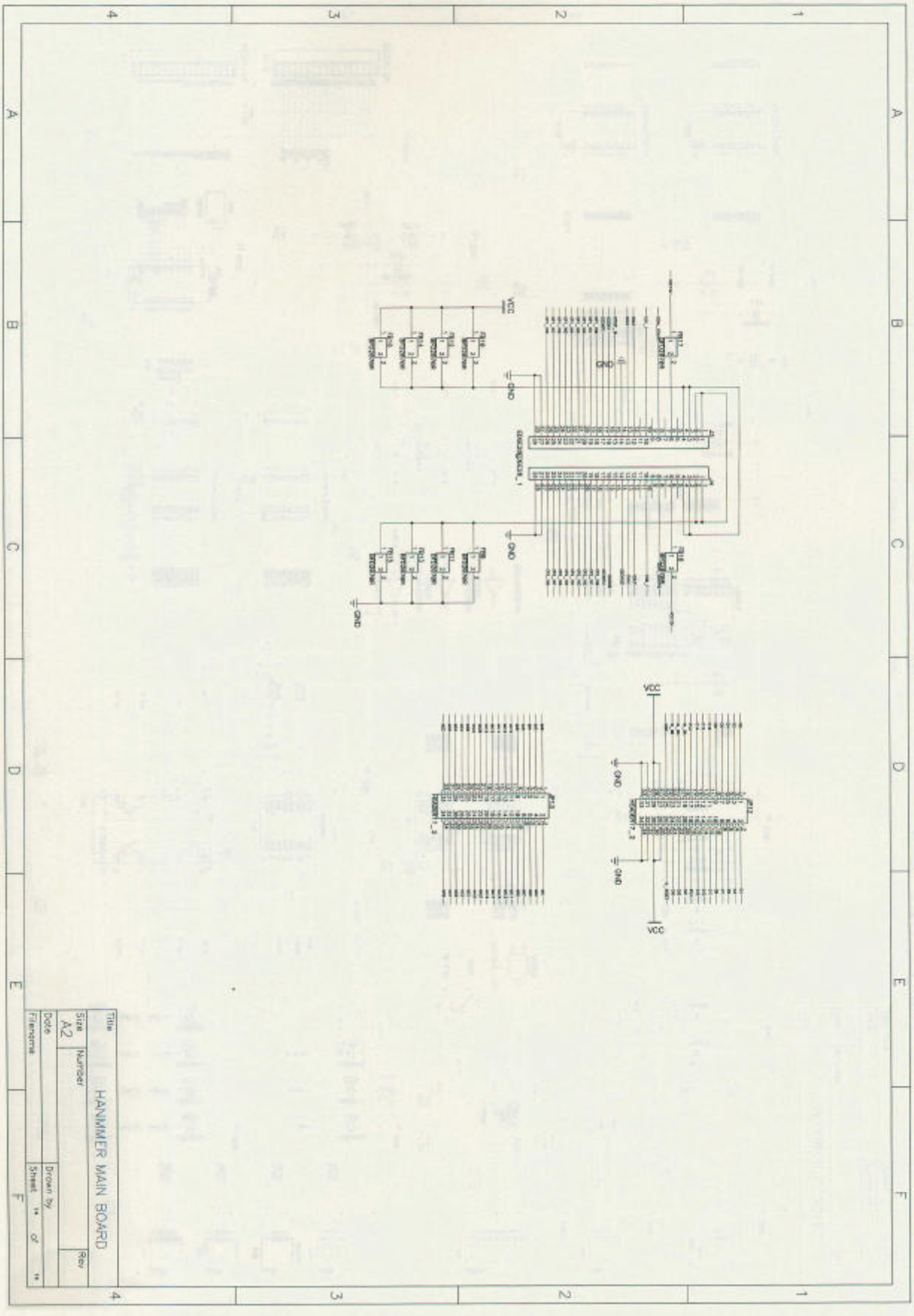
Title
HANMMER MAIN BOARD
Size
A2
Number
Rev
Date
Drawn by
File name
Sheet 14 of 14
VCC
GND

13. SCHEMATIC FOR I/O BOARD

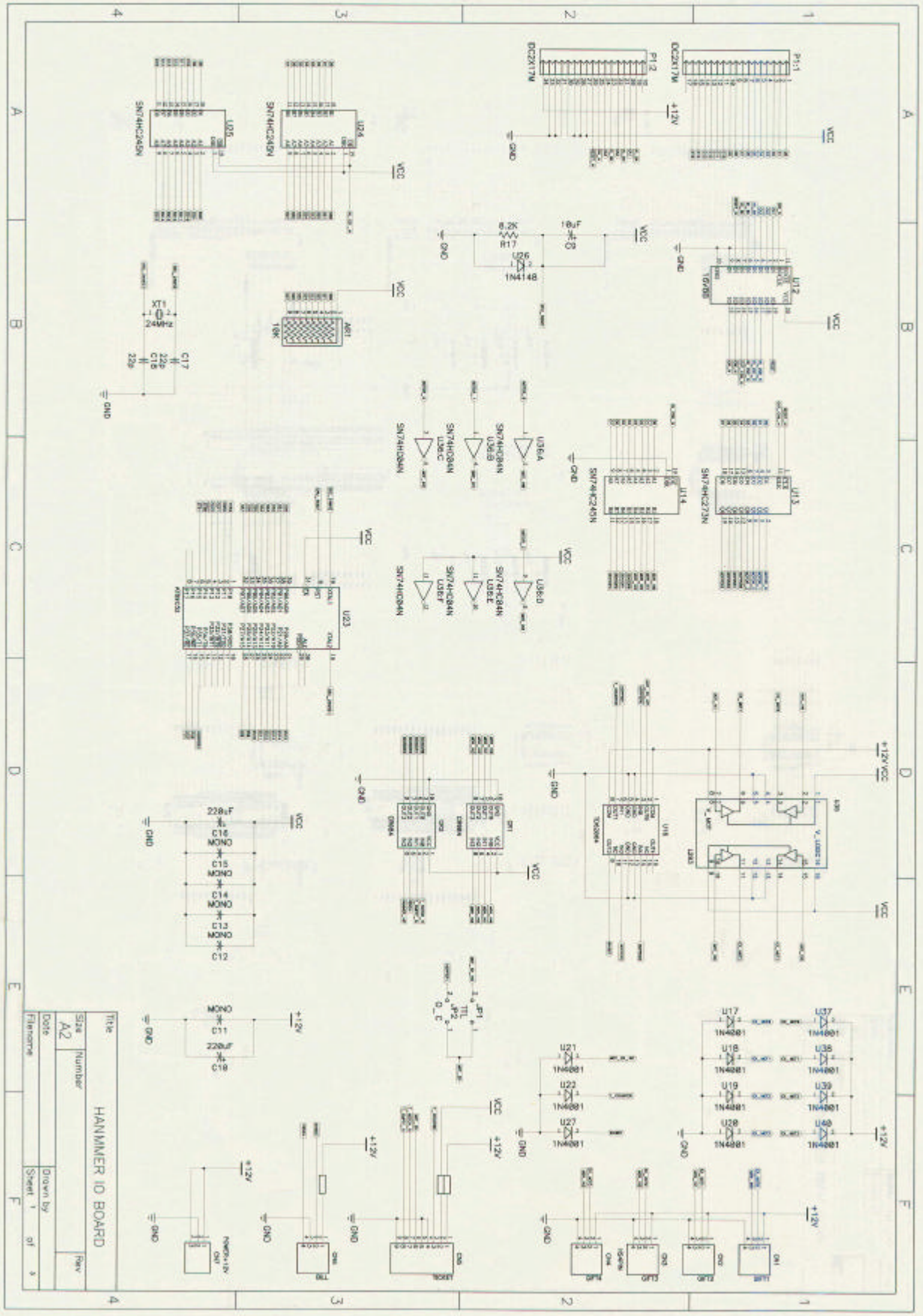

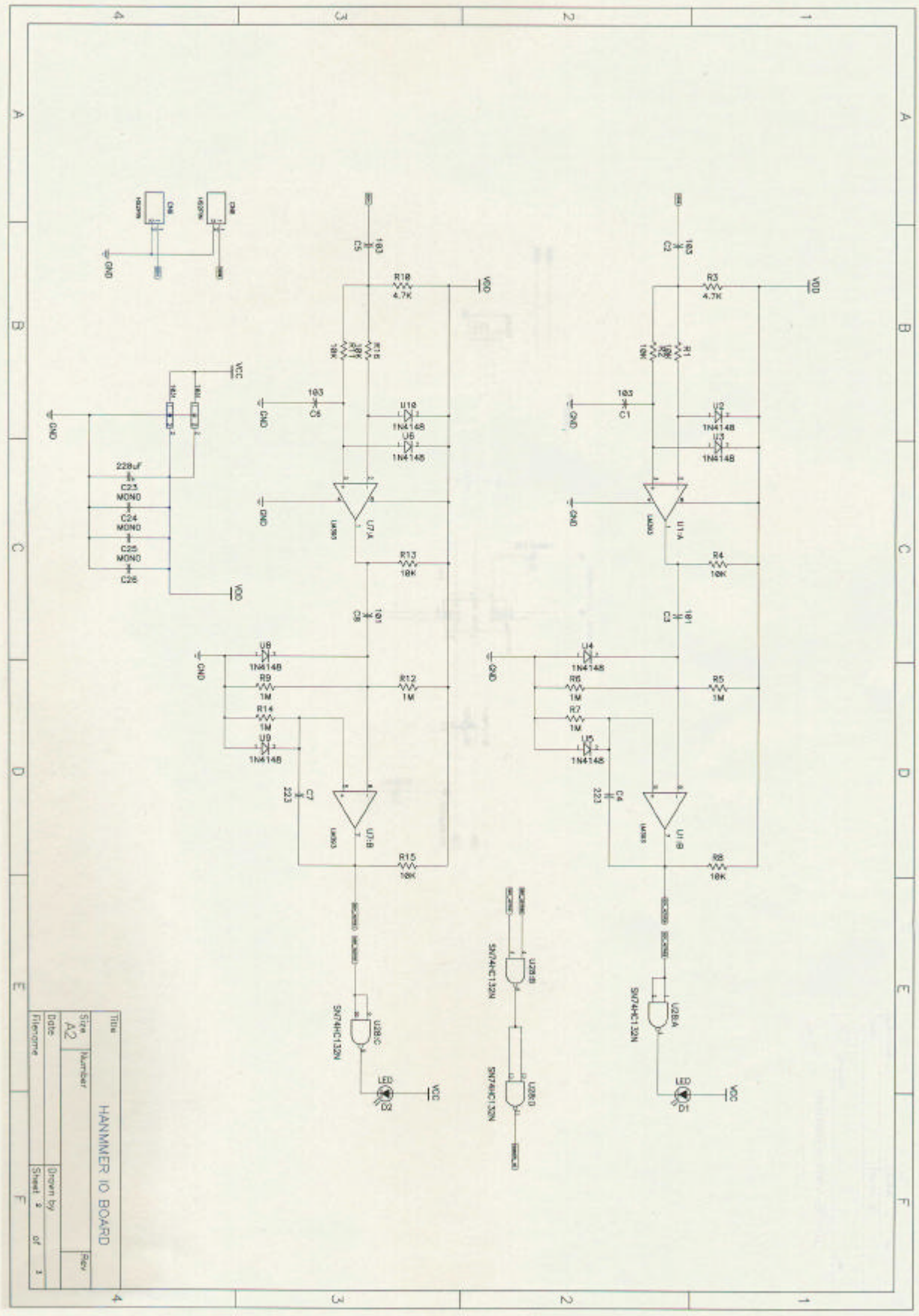
HANMMER IO BOARD
Title
Size
A2
Number
Rev
Date
Filename
Drawn by
Sheet 2 of 3
R3
4.7K
R10
4.7K
R13
10K
R12
1M
R15
10K
R4
10K
R5
1M
R8
10K
U2
1N4148
U3
1N4148
U4
1N4148
U5
1N4148
U8
1N4148
U9
1N4148
U10
1N4148
U6
1N4148
U7:A
U7:B
U1:A
U1:B
U2B:A
U2B:B
U2B:C
U2B:D
SN74HC132N
LED
D1
D2
VDD
VCC
GND
C1
C2
C3
C4
C5
C6
C7
C8
C23
C24
C25
C26
228uF
MONO

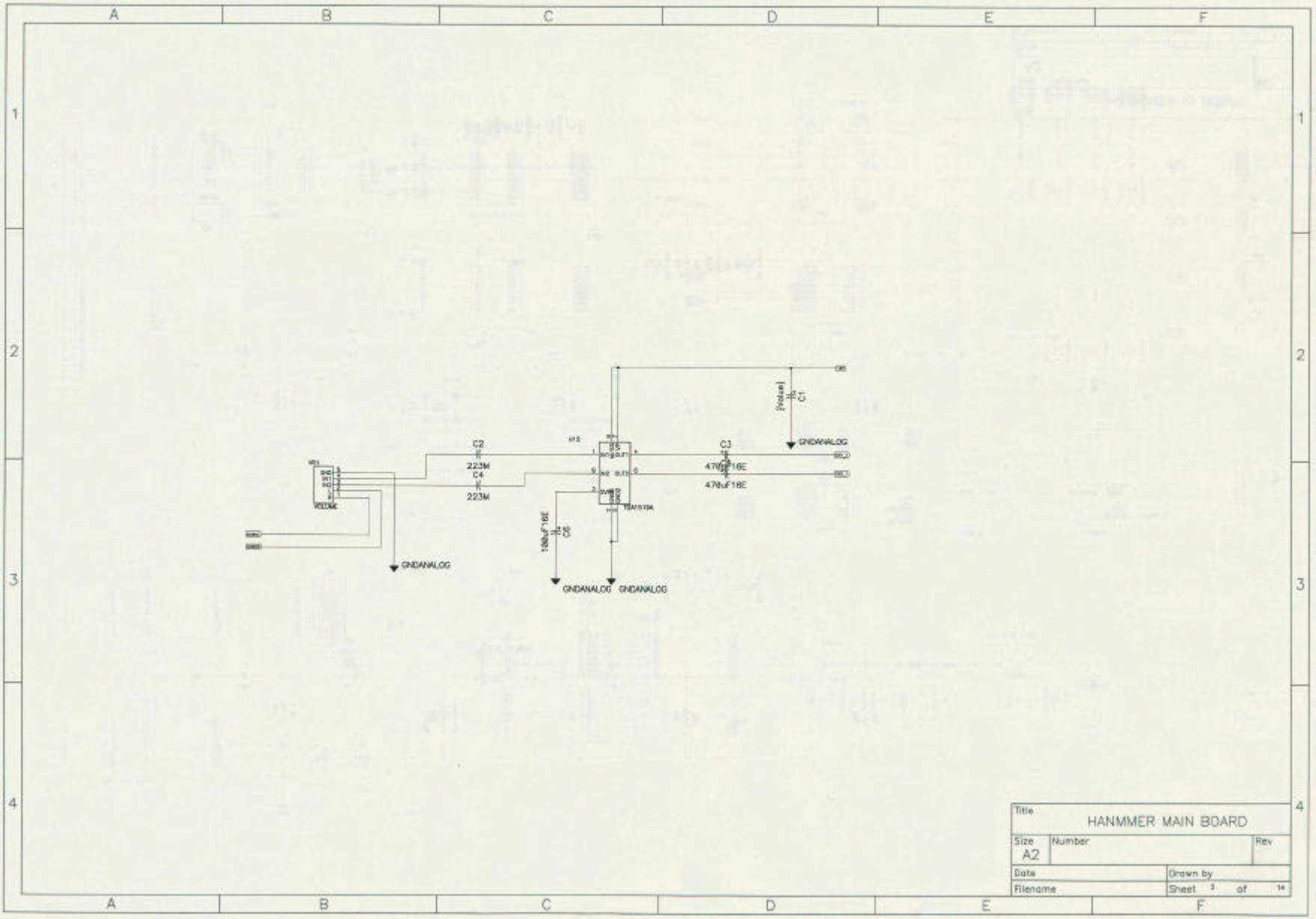

C2
223M
C4
223M
C3
470uF16E
470uF16E
C1
(Value)
C5
100uF16E
GNDANALOG
GNDANALOG
GNDANALOG
GNDANALOG
Title
HANMMER MAIN BOARD
Size
A2
Number
Rev
Date
Drawn by
Filename
Sheet 3 of 14